SEWER DESIGN STANDARDS

(September 2007) Revised January 5, 2009

THE CITY OF NEW YORK
BUREAU OF WATER AND SEWER OPERATIONS
DEPARTMENT OF ENVIRONMENTAL PROTECTION

SEWER DESIGN STANDARDS
TABLE OF CONTENTS

SEWER DESIGN CRITERIA - MANHOLE SPACING AND LOCATION ON PIPE SEWERS ---------- A

VITRIFIED CLAY PIPE ON CONCRETE CRADLE ON EARTH OR ON ROCK ---------- SE1

VITRIFIED CLAY PIPE ON CONCRETE CRADLE ON PILES ---------- SE2

CIRCULAR PRECAST REINFORCED CONCRETE PIPE ON CONCRETE CRADLE ON EARTH OR ON ROCK ---------- SE3

24" DIAMETER TO 48" DIAMETER CIRCULAR PRECAST REINFORCED CONCRETE PIPE ON CONCRETE CRADLE ON PILES - 2 PILE BENTS (20' AND 25' COVER) ---------- SE4

54" DIAMETER TO 96" DIAMETER CIRCULAR PRECAST REINFORCED CONCRETE PIPE ON CONCRETE CRADLE ON PILES - 3 PILE BENTS (20' AND 25' COVER) ---------- SE5

24" DIAMETER TO 60" DIAMETER CIRCULAR PRECAST REINFORCED CONCRETE PIPE ON CONCRETE CRADLE ON PILES - 2 PILE BENTS (5', 10' AND 15' COVER) ---------- SE6

66" DIAMETER TO 96" DIAMETER CIRCULAR PRECAST REINFORCED CONCRETE PIPE ON CONCRETE CRADLE ON PILES - 3 PILE BENTS (5', 10' AND 15' COVER) ---------- SE7

HORIZONTAL ELLIPTICAL PRECAST REINFORCED CONCRETE PIPE ON CONCRETE CRADLE ON EARTH OR ON ROCK ---------- SE8

23"W x 14"H TO 76"W x 48"H HORIZONTAL ELLIPTICAL PRECAST REINFORCED CONCRETE PIPE ON CONCRETE CRADLE ON PILES - 2 PILE BENTS (5', 10' AND 15' COVER) ---------- SE9

83"W x 53"H TO 121"W x 77"H HORIZONTAL ELLIPTICAL PRECAST REINFORCED CONCRETE PIPE ON CONCRETE CRADLE ON PILES - 3 PILE BENTS (5', 10, AND 15' COVER) ---------- SE10

TYPE A-1 AND TYPE A-2 MANHOLES ON 8" DIAMETER TO 30" DIAMETER PIPE SEWERS IN DRY LOCATION ---------- SE11

TYPE A-1 AND TYPE A-2 MANHOLES ON 8" DIAMETER TO 30" DIAMETER PIPE SEWERS ON PILES IN DRY LOCATION ---------- SE12

TYPE A-3 SHALLOW MANHOLE ON 8" DIAMETER TO 30" DIAMETER PIPE SEWERS ---------- SE13

TYPE B-1 AND TYPE B-2 MANHOLES ON 8" DIAMETER TO 30" DIAMETER PIPE SEWERS IN WET LOCATION ---------- SE14

TYPE B-1 AND TYPE B-2 MANHOLES ON 8" DIAMETER TO 30" DIAMETER PIPE SEWERS ON PILES IN WET LOCATION ---------- SE15

TYPE C-1 AND TYPE C-2 MANHOLES ON 36" DIAMETER TO 60" DIAMETER PIPE SEWERS ---------- SE16

TYPE C-1 AND TYPE C-2 MANHOLES ON 36" DIAMETER TO 60" DIAMETER PIPE SEWERS ON PILES ---------- SE17

TYPE D-1 AND TYPE D-2 MANHOLES ON 66" DIAMETER TO 96" DIAMETER PIPE SEWERS ---------- SE18

TYPE D-1 AND TYPE D-2 MANHOLES ON 66" DIAMETER TO 96" DIAMETER PIPE SEWERS ON PILES ---------- SE19

TYPE E-1 MANHOLE ON 23"W x 14"H TO 60"W x 38"H HORIZONTAL ELLIPTICAL PIPE SEWERS ---------- SE20

TYPE E-1 MANHOLE ON 23"W x 14"H TO 60"W x 38"H HORIZONTAL ELLIPTICAL PIPE SEWERS ON PILES ---------- SE21

TYPE E-2 MANHOLE ON 68"W x 43"H TO 121"W x 77"H HORIZONTAL ELLIPTICAL PIPE SEWERS ---------- SE22

TYPE E-2 MANHOLE ON 68"W x 43"H TO 121"W x 77"H HORIZONTAL ELLIPTICAL PIPE SEWERS ON PILES ---------- SE23

DROP PIPE MANHOLE (TYPE I) ON 10" DIAMETER TO 24" DIAMETER PIPE SEWERS ---------- SE24

DROP PIPE MANHOLE (TYPE I) ON 10" DIAMETER TO 24" DIAMETER PIPE SEWERS ON PILES ---------- SE25

DROP PIPE MANHOLE (TYPE II) FOR 10" DIAMETER TO 24" DIAMETER INCOMING DROP PIPE SEWERS ---------- SE26

CONTENTS

DROP PIPE MANHOLE (TYPE II) FOR 10" DIAMETER TO 24" DIAMETER INCOMING DROP PIPE SEWERS ON PILES ---------- SE27

4'-0" DIAMETER PRECAST MANHOLE (3 DWGS) ---------- SE28A, SE28B & SE28C

5'-0" DIAMETER PRECAST MANHOLE (3 DWGS) ---------- SE29A, SE29B & SE29C

6'-0", 7'-0", 8'-0" AND 10'-0" DIAMETER PRECAST MANHOLE (4 DWGS) ---------- SE30A, SE30B, SE30C & SE30D

PRECAST MANHOLE DETAILS (3 DWGS) ---------- SE31A, SE31B & SE31C

ALTERNATE MONOLITHIC BASE SECTIONS FOR PRECAST MANHOLES (POURED IN PLACE) ---------- SE32

PRECAST DROP PIPE MANHOLE (TYPE I) ---------- SE33

PRECAST DROP PIPE MANHOLE (TYPE II) ---------- SE34

REMOVABLE PRECAST REINFORCED CONCRETE SLAB ---------- SE35

REMOVABLE PRECAST REINFORCED CONCRETE SLAB FOR DROP PIPE MANHOLE (TYPE I) ---------- SE36

REMOVABLE PRECAST REINFORCED CONCRETE SLAB FOR DROP PIPE MANHOLE (TYPE II) ---------- SE37

MANHOLE CHIMNEY DETAIL (WHEN FINAL GRADE IS ABOVE LEGAL GRADE) ---------- SE38

27" DIAMETER CAST IRON MANHOLE FRAME AND COVER (FOR ACCESS OR CLEANOUT) ---------- SE39

27" DIAMETER CAST IRON EXTENSION RING FOR 27" DIAMETER MANHOLE FRAME AND COVER ---------- SE40

36" DIAMETER CAST IRON MANHOLE FRAME AND COVER FOR CLEANOUT ---------- SE41

24" DIAMETER CAST IRON MANHOLE COVER ---------- SE42

CAST IRON MANHOLE STEP ---------- SE43

CAST IRON MANHOLE STEP (BOLT-ON TYPE) ---------- SE44

CIRCULAR CAST IRON MANHOLE STEP (BOLT-ON TYPE) ---------- SE45

PLASTIC MANHOLE STEP ---------- SE46

TYPE 1 CATCH BASIN (WITH CURB PIECE) ---------- SE47

TYPE 2 CATCH BASIN (WITHOUT CURB PIECE) ---------- SE48

TYPE 3 CATCH BASIN (WITHOUT CURB PIECE) ---------- SE49

DOUBLE CATCH BASIN (WITHOUT CURB PIECE) ---------- SE50

MODIFICATION OF EXISTING TYPE 1 CATCH BASIN DISCONTINUED ---------- SE51

PRECAST TYPE 1 CATCH BASIN (2 DWGS) ---------- SE52A & SE52B

PRECAST TYPE 2 CATCH BASIN (2 DWGS) ---------- SE53A & SE53B

PRECAST TYPE 3 CATCH BASIN ---------- SE54

CONTENTS

PRECAST DOUBLE CATCH BASIN (2 DWGS) ---------- SE55A & SE55B

PRECAST SEEPAGE BASIN (5 DWGS) ---------- (NOT INCLUDED) ---------- SE56A, SE56B, SE56C, SE56D & SE56E

CAST IRON FRAME FOR CATCH BASINS (WITH CURB PIECE) ---------- SE57

CAST IRON FRAME FOR CATCH BASINS (WITHOUT CURB PIECE) ---------- SE58

CAST IRON GRATING, BACK PLATE, AND CURB PIECE FOR CATCH BASINS ---------- SE59

CAST IRON HOOD AND HOOKS FOR CATCH BASINS ---------- SE60

DUCTILE IRON PIPE ALTERNATE ---------- SE61

HOUSE CONNECTIONS (FOR 6" AND 8" DIA. CAST IRON SOIL PIPE OR VITRIFIED CLAY PIPE ON CONCRETE CRADLE OR ENCASED IN CONCRETE ON EARTH OR ON ROCK ---------- SE62

RISER ON 10" DIAMETER TO 18" DIAMETER VITRIFIED CLAY PIPE SEWERS ON CONCRETE CRADLE ---------- SE63

RISER ON PRECAST REINFORCED CONCRETE PIPE SEWERS ON CONCRETE CRADLE ---------- SE64

27" DIAMETER ALUMINUM FLOOR GRATING ---------- SE65

36" DIAMETER ALUMINUM FLOOR GRATING ---------- SE66

CONSTRUCTION OF CATCH BASIN (NO EXISTING CURB) ---------- SE67

RECONSTRUCTION OF EXISTING MANHOLE AND REPLACEMENT OF EXISTING MANHOLE FRAME AND COVER ---------- SE68

ROADWAY RESURFACING (PAVEMENT KEY - TYPE B) ---------- SE69

MINIMUM LOAD DIAGRAM FOR NON-WATERTIGHT SHEETING DESIGN ---------- SE70

MINIMUM LOAD DIAGRAM FOR WATERTIGHT SHEETING DESIGN ---------- SE71

A

CITY OF NEW YORK
DEPARTMENT OF ENVIRONMENTAL PROTECTION

STANDARD FOR SEWER DESIGN CRITERIA - MANHOLE SPACING AND LOCATION ON PIPE SEWERS

A. MAXIMUM SPACING OF MANHOLES ON PIPE SEWERS

PIPE SIZE:	RECOMMENDED MAXIMUM SPACING	ABSOLUTE MAXIMUM SPACING
10" DIA. TO 36" DIA. CIRCULAR PIPE 14"H x 23"W TO 29"H x 45"W HORIZONTAL ELLIPTICAL PIPE 23"H x 14"W TO 45"H x 29"W VERTICAL ELLIPTICAL PIPE	250'	300'
42" DIA. TO 72" DIA. CIRCULAR PIPE 34"H x 53"W TO 58"H x 91"W HORIZONTAL ELLIPTICAL PIPE 53"H x 34"W TO 91"H x 58"W VERTICAL ELLIPTICAL PIPE	400'	500'
78" DIA. AND LARGER CIRCULAR PIPE 63"H x 98"W AND LARGER HORIZONTAL ELLIPTICAL PIPE 98"H x 63"W AND LARGER VERTICAL ELLIPTICAL PIPE	600'	800'

B. MANHOLE LOCATION ON PIPE SEWERS

1. AT ALL CHANGES IN GRADE OR ELEVATION FOR ALL SIZES OF SEWERS.
2. AT ALL CHANGES IN ALIGNMENT FOR ALL SIZES OF SEWERS.
3. AT ALL STREET INTERSECTIONS FOR SEWERS UP TO AND INCLUDING 24" DIAMETER.
4. AT ALL JUNCTIONS OF 2 OR MORE SEWERS.
5. AT ALL CATCH BASIN CONNECTIONS WHERE IT IS NOT PRACTICAL TO CONNECT DIRECTLY TO THE SEWER. A DIRECT CONNECTION SHALL NOT BE MADE TO A SEWER LESS THAN 60" IN DIAMETER.
6. THE TERM "DRY LOCATION" SHALL MEAN ANY LOCATION WHERE THE ENTIRE MANHOLE IS LOCATED ABOVE THE WATER TABLE AND IS IN NORMALLY DRY SOIL.
7. THE TERM "WET LOCATION" SHALL MEAN ANY LOCATION WHERE THE MANHOLE IS LOCATED IN WHOLE OR IN PART BELOW THE WATER TABLE OR IN NORMALLY WET SOIL.
8. SPECIAL CONSIDERATION WILL BE REQUIRED FOR SITUATIONS NOT COVERED HEREIN.

Lege W. Cava P.E. — 7/9/07
ASSISTANT COMMISSIONER, DESIGN
DEPARTMENT OF DESIGN AND CONSTRUCTION
DATE

[signature] P.E. — 8/10/07
DIRECTOR OF ENGINEERING
DEPARTMENT OF ENVIRONMENTAL PROTECTION
DATE

SE1

CITY OF NEW YORK
DEPARTMENT OF ENVIRONMENTAL PROTECTION

SE1

STANDARD FOR VITRIFIED CLAY PIPE ON CONCRETE CRADLE ON EARTH OR ON ROCK

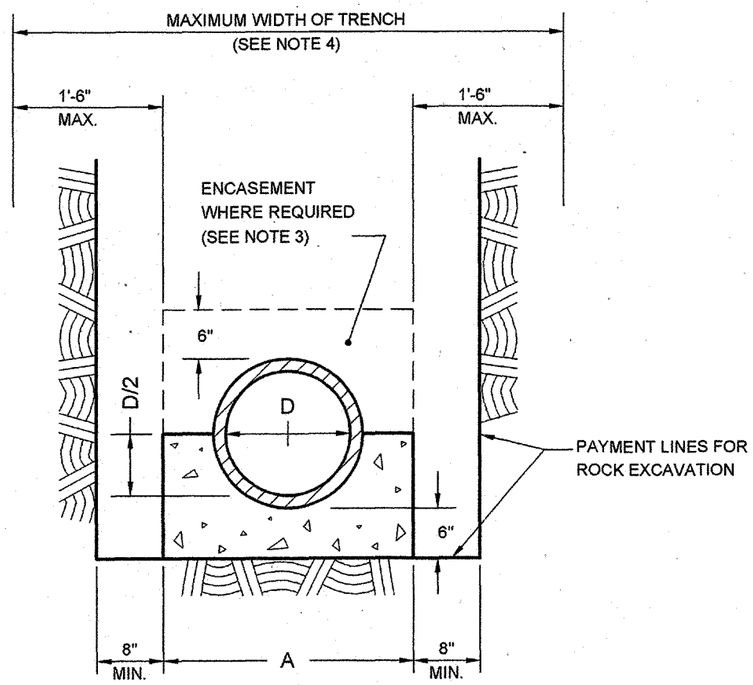

SECTION ON ROCK

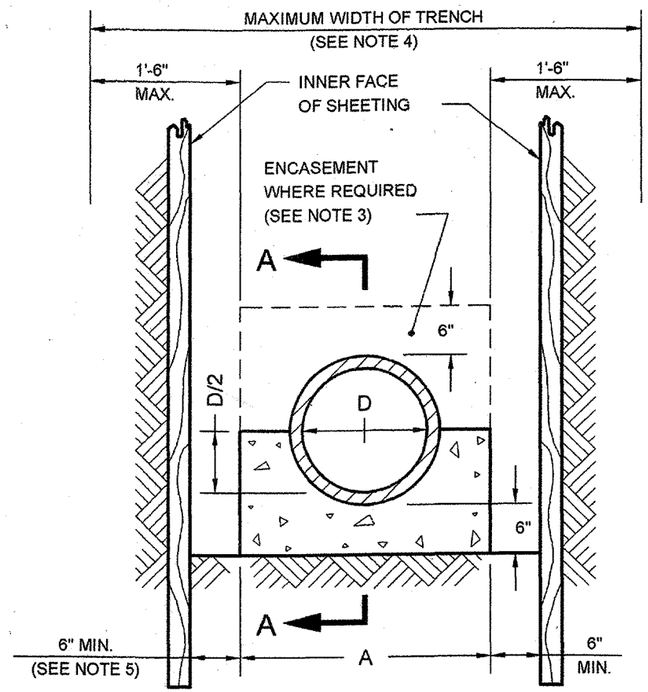

SECTION ON EARTH

D	A	MAX. COVER WITHOUT ENCSMT.	CONC. CRADLE CU. YD./L.F.	CONC. ENCSMT. CU. YD./L.F.
8"	1'-6"	22'	0.0408	0.0815
10"	2'-0"	20'	0.0596	0.1191
12"	2'-3"	18'	0.0708	0.1415
15"	2'-6"	16'	0.0831	0.1661
18"	2'-10"	15'	0.0998	0.1996

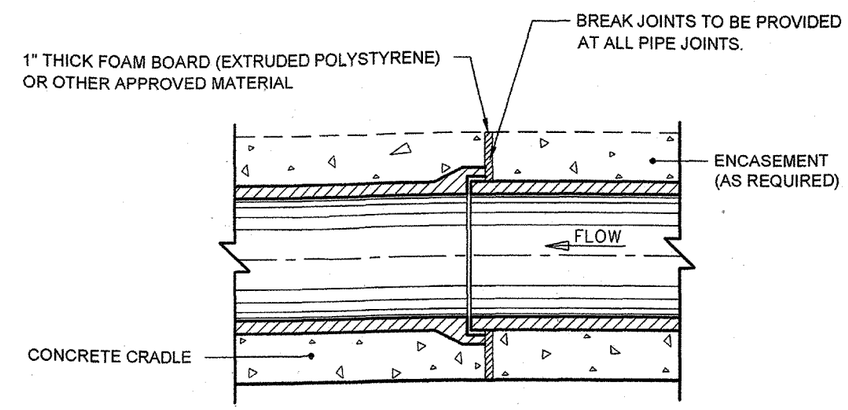

SECTION A-A
BREAK JOINTS TO CONCRETE BEDDING

NOTES:

(1) CRADLE AND ENCASEMENT ARE CLASS 40 CONCRETE.

(2) ENTIRE CRADLE OR ENCASEMENT IS TO BE PLACED MONOLITHICALLY.

(3) ENCASEMENT REQUIRED ON PIPE WHICH HAS A COVER, FROM FINAL GRADE TO THE OUTER TOP OF THE PIPE, OF LESS THAN FOUR (4) FEET OR WHEN THE UPPER LIMIT OF COVER IS EXCEEDED.

(4) UNLESS OTHERWISE APPROVED BY THE ENGINEER, THE MAX. WIDTH OF TRENCH SHALL BE SUCH THAT THE MAX. WIDTH BETWEEN INNER FACES OF THE LOWEST STAGE OF SHEETING OR ROCK CUT LINES, FROM SUBGRADE OF TRENCH TO A MIN. HEIGHT OF TWO (2) FEET ABOVE THE OUTER TOP OF THE PIPE, SHALL NOT BE GREATER THAN THE STANDARD CRADLE WIDTH PLUS EIGHTEEN (18) INCHES MAXIMUM EACH SIDE.

(5) SIX (6) INCH MINIMUM SHALL BE MAINTAINED AT ALL TIMES, EXCEPT WHERE SHEETING IS TO BE USED AS FORMWORK.

P.E. 7/9/07
ASSISTANT COMMISSIONER, DESIGN
DEPARTMENT OF DESIGN AND CONSTRUCTION
DATE

P.E. 8/10/07
DIRECTOR OF ENGINEERING
DEPARTMENT OF ENVIRONMENTAL PROTECTION
DATE

REVISED FEBRUARY 2007: L. ADRIEN

SE2

CITY OF NEW YORK
DEPARTMENT OF ENVIRONMENTAL PROTECTION

SE2

STANDARD FOR VITRIFIED CLAY PIPE ON CONCRETE CRADLE ON PILES

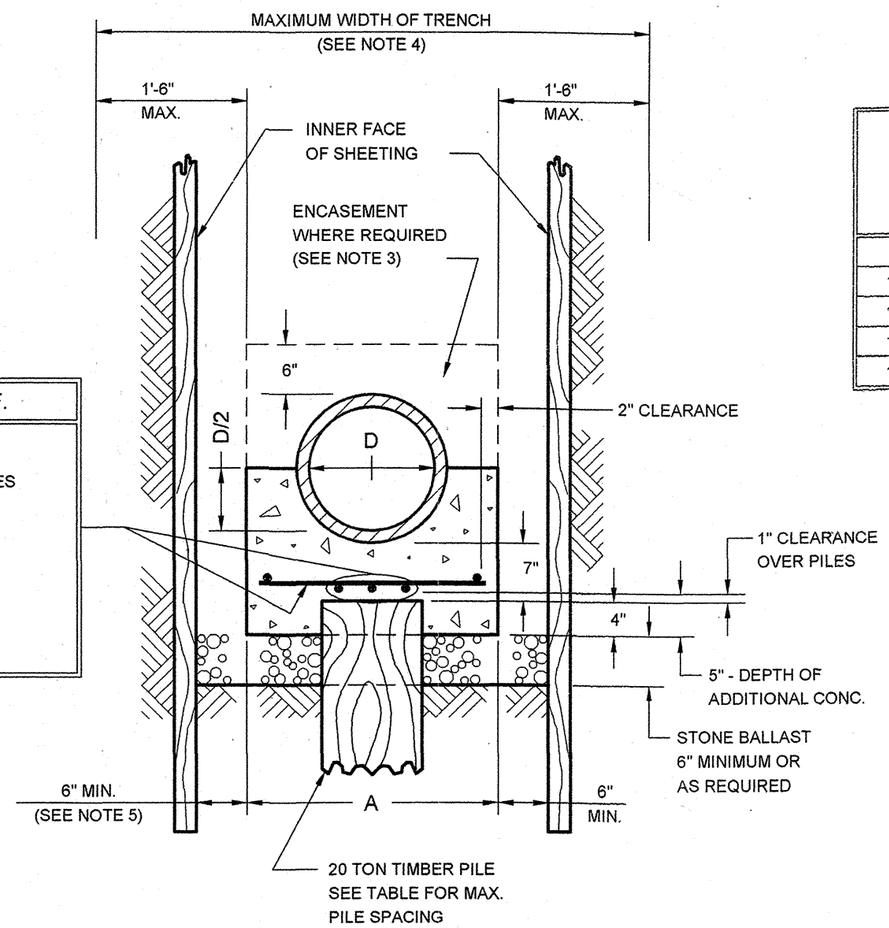

ADDITIONAL STEEL REINF.
LONGITUDINAL BARS 3-#6 OVER PILES FOR ALL SIZES OF PIPES 1-#6 ON EACH SIDE FOR 15" AND 18" PIPES **TRANSVERSE BARS** 3-#6 OVER PILES #6@12" O.C. BETWEEN PILES

D	A	MAXIMUM PILE SPACING				ADDITIONAL ITEMS/L.F.					STONE BALLAST CU. YD. PER L.F.
		10' COVER	15' COVER	20' COVER	25' COVER	ADD. CONC. CU. YD.	ADDITIONAL STL. REINF. (LBS.)				
							10' COVER	15' COVER	20' COVER	25' COVER	
8"	1'-6"	6'-0"	6'-0"	6'-0"	6'-0"	0.0232	6.85	6.85	6.85	6.85	0.0834
10"	2'-0"	6'-0"	6'-0"	6'-0"	6'-0"	0.0309	7.85	7.85	7.85	7.85	0.0926
12"	2'-3"	6'-0"	6'-0"	6'-0"	5'-0"	0.0348	8.35	8.35	8.35	8.54	0.0973
15"	2'-6"	6'-0"	6'-0"	5'-0"	4'-0"	0.0386	11.85	11.85	12.07	12.40	0.1019
18"	2'-10"	6'-0"	5'-0"	4'-0"	3'-6"	0.0438	12.52	12.77	13.15	13.95	0.1081

NOTES:

(1) CRADLE AND ENCASEMENT ARE CLASS 40 CONCRETE. REBARS-GRADE 60.

(2) ENTIRE CRADLE OR ENCASEMENT IS TO BE PLACED MONOLITHICALLY.

(3) ENCASEMENT REQUIRED ON PIPE WHICH HAS A COVER, FROM FINAL GRADE TO THE INNER TOP OF THE PIPE, OF LESS THAN FOUR (4) FEET OR WHEN THE UPPER LIMIT OF COVER IS EXCEEDED.

(4) UNLESS OTHERWISE APPROVED BY THE ENGINEER, THE MAX. WIDTH OF TRENCH SHALL BE SUCH THAT THE MAX. WIDTH BETWEEN INNER FACES OF THE LOWEST STAGE OF SHEETING OR ROCK CUT LINES, FROM SUBGRADE OF TRENCH TO A MIN. HEIGHT OF TWO (2) FEET ABOVE THE OUTER TOP OF THE PIPE, SHALL NOT BE GREATER THAN THE STANDARD CRADLE WIDTH PLUS EIGHTEEN (18) INCHES MAXIMUM EACH SIDE.

(5) SIX (6) INCH MINIMUM SHALL BE MAINTAINED AT ALL TIMES, EXCEPT WHERE SHEETING IS TO BE USED AS FORMWORK.

Lee W. Cowan P.E. — 7/9/07
ASSISTANT COMMISSIONER, DESIGN
DEPARTMENT OF DESIGN AND CONSTRUCTION
DATE

Mordi Lane P.E. — 8/10/07
DIRECTOR OF ENGINEERING
DEPARTMENT OF ENVIRONMENTAL PROTECTION
DATE

REVISED MAY 2007: L. ADRIEN

CITY OF NEW YORK
DEPARTMENT OF ENVIRONMENTAL PROTECTION

SE3

STANDARD FOR CIRCULAR PRECAST REINFORCED CONCRETE PIPE ON CONCRETE CRADLE ON EARTH OR ON ROCK

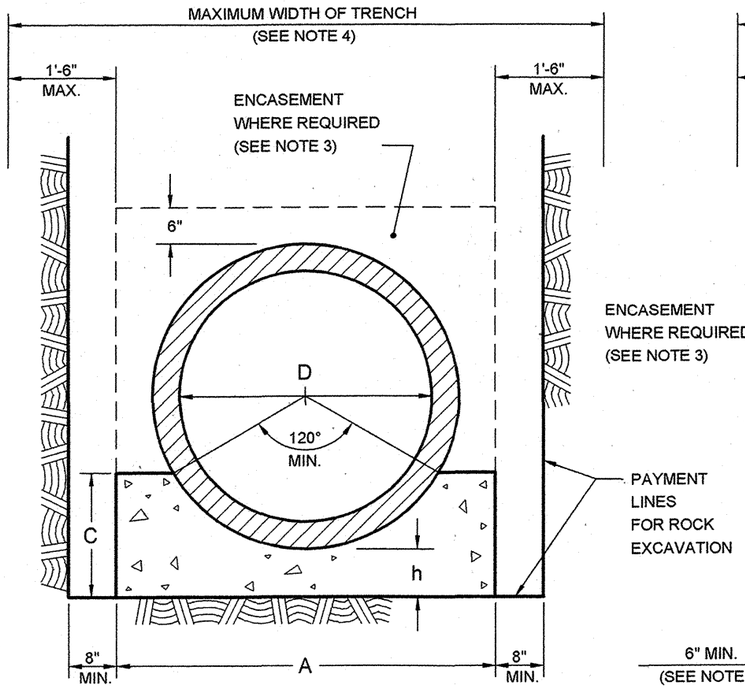

SECTION ON ROCK

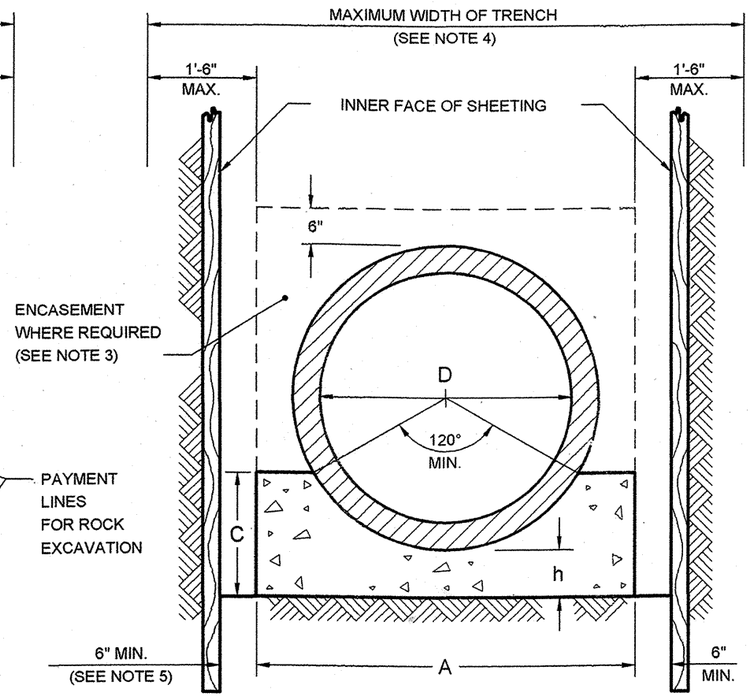

SECTION ON EARTH

D	A	h	C	CONC. CRADLE CU. YD./L.F.	CONC. ENCSMT. CU. YD./L.F.	MAX. COVER FOR PIPE CLASS		
						III	IV	V
24"	3'-6"	6"	1'-2"	0.1124	0.2719	12'-0"	18'-0"	27'-0"
30"	4'-1"	6"	1'-4"	0.1414	0.3410	12'-6"	18'-6"	27'-6"
36"	4'-8"	7"	1'-6"	0.1829	0.4300	12'-6"	18'-6"	28'-0"
42"	5'-3"	8"	1'-9"	0.2348	0.5279	12'-6"	18'-6"	28'-0"
48"	5'-10"	9"	2'-0"	0.2928	0.6348	12'-6"	18'-6"	28'-6"
54"	6'-5"	10"	2'-3"	0.3570	0.7507	13'-0"	19'-0"	28'-6"
60"	7'-0"	11"	2'-5"	0.4219	0.8757	13'-0"	19'-0"	29'-0"
66"	7'-7"	12"	2'-8"	0.4981	1.0097	13'-0"	19'-0"	29'-0"
72"	8'-2"	13"	2'-11"	0.5806	1.1526	13'-0"	19'-6"	29'-6"
78"	8'-9"	14"	3'-2"	0.6691	1.3046	13'-6"	19'-6"	29'-6"
84"	9'-4"	15"	3'-4"	0.7574	1.4656	13'-6"	20'-0"	29'-6"
90"	9'-11"	17"	3'-8"	0.8886	1.6662	14'-0"	20'-0"	30'-0"
96"	10'-6"	18"	3'-11"	0.9972	1.8470	14'-0"	20'-0"	30'-0"

NOTES:

(1) CRADLE AND ENCASEMENT ARE CLASS 40 CONCRETE.

(2) ENTIRE CRADLE OR ENCASEMENT IS TO BE PLACED MONOLITHICALLY.

(3) ENCASEMENT REQUIRED ON PIPE WHICH HAS A COVER, FROM FINAL GRADE TO THE INNER TOP OF THE PIPE, OR LESS THAN FOUR (4) FEET OR WHEN THE UPPER LIMIT OF COVER FOR CLASS V PIPE IS EXCEEDED.

(4) UNLESS OTHERWISE APPROVED BY THE ENGINEER, THE MAX. WIDTH OF TRENCH SHALL BE SUCH THAT THE MAX. WIDTH BETWEEN INNER FACES OF THE LOWEST STAGE OF SHEETING OR ROCK CUT LINES, FROM SUBGRADE OF TRENCH TO A MIN. HEIGHT OF TWO (2) FEET ABOVE THE OUTER TOP OF THE PIPE, SHALL NOT BE GREATER THAN THE STANDARD CRADLE WIDTH PLUS EIGHTEEN (18) INCHES MAXIMUM EACH SIDE.

(5) SIX (6) INCH MINIMUM SHALL BE MAINTAINED AT ALL TIMES, EXCEPT WHERE SHEETING IS TO BE USED AS FORMWORK.

(6) CRADLE WIDTH "A" IS BASED ON WALL "B" FOR CLASS III, IV & V P.R.C.P.

P.E.
ASSISTANT COMMISSIONER, DESIGN
DEPARTMENT OF DESIGN AND CONSTRUCTION

7/9/07
DATE

P.E.
DIRECTOR OF ENGINEERING
DEPARTMENT OF ENVIRONMENTAL PROTECTION

8/10/07
DATE

REVISED JULY 2004: C.A. NEVERSON

CITY OF NEW YORK
DEPARTMENT OF ENVIRONMENTAL PROTECTION

SE4

STANDARD FOR 24" DIA. TO 48" DIA. CIRCULAR PRECAST REINFORCED CONCRETE PIPE ON CONCRETE CRADLE ON PILES - 2 PILE BENTS

(20' AND 25' COVER)

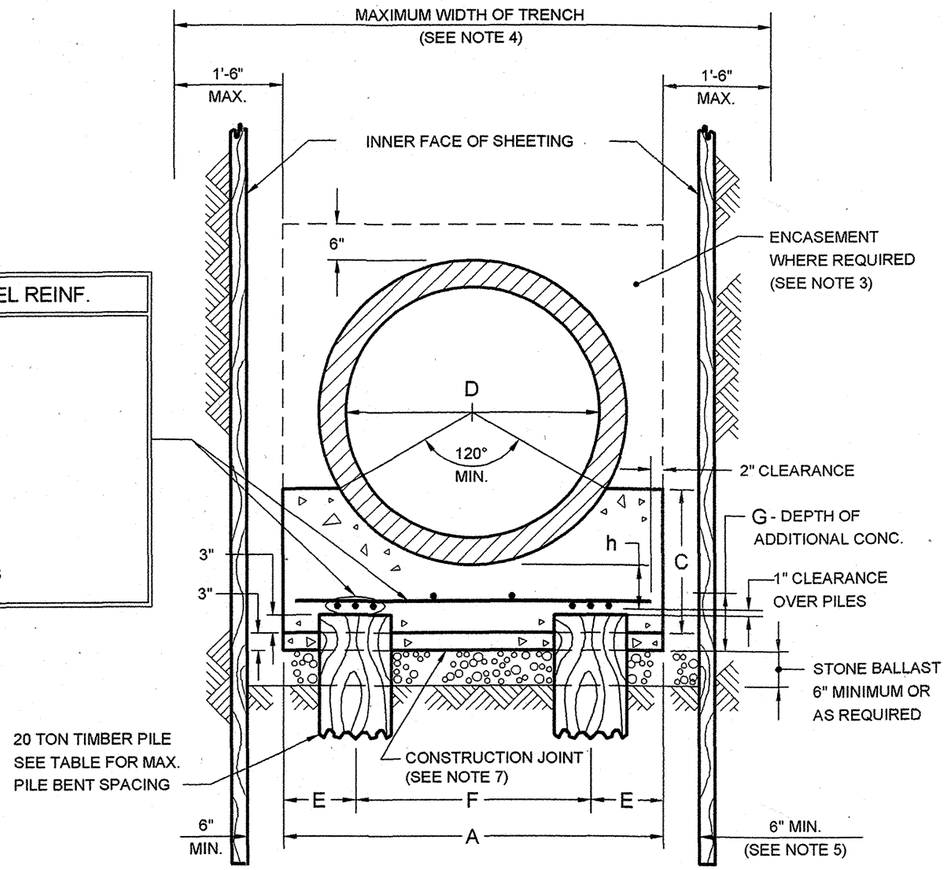

ADDITIONAL STEEL REINF.

LONGITUDINAL BARS

3-#6 OVER PILES
#6 BARS BETWEEN PILES
SEE TABLE FOR THE TOTAL
NUMBER OF LONG. BARS

TRANSVERSE BARS

3-#6 OVER PILES
#6@12" O.C. BETWEEN PILES

D	A	h	C	E	F	G	MAXIMUM PILE BENT SPACING		#6 LONG. BARS	ADDITIONAL ITEMS/L.F.			STONE BALLAST CU. YD. PER L.F.
										ADD. STL. REINF. (LBS.)		ADD. CONC. CU. YD.	
							20' COVER	25' COVER		20' COVER	25' COVER		
24"	3'-6"	11"	1'-9"	9"	2'-0"	11"	6'-0"	6'-0"	7	16.86	16.86	0.1189	0.1204
30"	4'-1"	8"	1'-9"	9"	2'-7"	8"	5'-6"	5'-0"	7	17.69	18.40	0.1009	0.1312
36"	4'-8"	7"	1'-9"	12"	2'-8"	6"	5'-0"	4'-6"	7	19.63	19.20	0.0865	0.1420
42"	5'-3"	8"	2'-0"	12"	3'-3"	6"	4'-3"	4'-0"	8	22.45	23.10	0.0973	0.1528
48"	5'-10"	9"	2'-3"	12"	3'-10"	6"	3'-9"	3'-6"	9	26.74	25.32	0.1081	0.1636

NOTES:

(1) CRADLE AND ENCASEMENT ARE CLASS 40 CONCRETE. REBARS-GRADE 60.

(2) ENTIRE CRADLE OR ENCASEMENT IS TO BE PLACED MONOLITHICALLY ABOVE THE CONSTRUCTION JOINT.

(3) ENCASEMENT REQUIRED ON PIPE WHICH HAS A COVER, FROM FINAL GRADE TO INNER TOP OF THE PIPE, OF LESS THAN FOUR (4) FEET OR WHEN THE UPPER LIMIT OF COVER FOR CLASS V PIPE IS EXCEEDED.

(4) UNLESS OTHERWISE APPROVED BY THE ENGINEER, THE MAX. WIDTH OF TRENCH SHALL BE SUCH THAT THE MAX. WIDTH BETWEEN INNER FACES OF THE LOWEST STAGE OF SHEETING OR ROCK CUT LINES, FROM SUBGRADE OF TRENCH TO A MIN. HEIGHT OF TWO (2) FEET ABOVE THE OUTER TOP OF THE PIPE, SHALL NOT BE GREATER THAN THE STANDARD CRADLE WIDTH PLUS EIGHTEEN (18) INCHES MAXIMUM EACH SIDE.

(5) SIX (6) INCH MINIMUM SHALL BE MAINTAINED AT ALL TIMES, EXCEPT WHERE SHEETING IS TO BE USED AS FORMWORK.

(6) CRADLE WIDTH "A" IS BASED ON WALL "B" FOR CLASS III, IV & V P.R.C.P.

(7) CONSTRUCTION JOINT TO BE UTILIZED WHENEVER GROUND CONDITIONS PREVENT PROPER SUPPORT OF PIPE.

Lee W. Caron P.E.
ASSISTANT COMMISSIONER, DESIGN
DEPARTMENT OF DESIGN AND CONSTRUCTION

7/9/07
DATE

Mazdi Tavana P.E.
DIRECTOR OF ENGINEERING
DEPARTMENT OF ENVIRONMENTAL PROTECTION

8/10/07
DATE

REVISED JULY 2004: S. MELAMED

CITY OF NEW YORK
DEPARTMENT OF ENVIRONMENTAL PROTECTION

SE5

STANDARD FOR 54" DIA. TO 96" DIA. CIRCULAR PRECAST REINFORCED CONCRETE PIPE ON CONCRETE CRADLE ON PILES - 3 PILE BENTS

(20' AND 25' COVER)

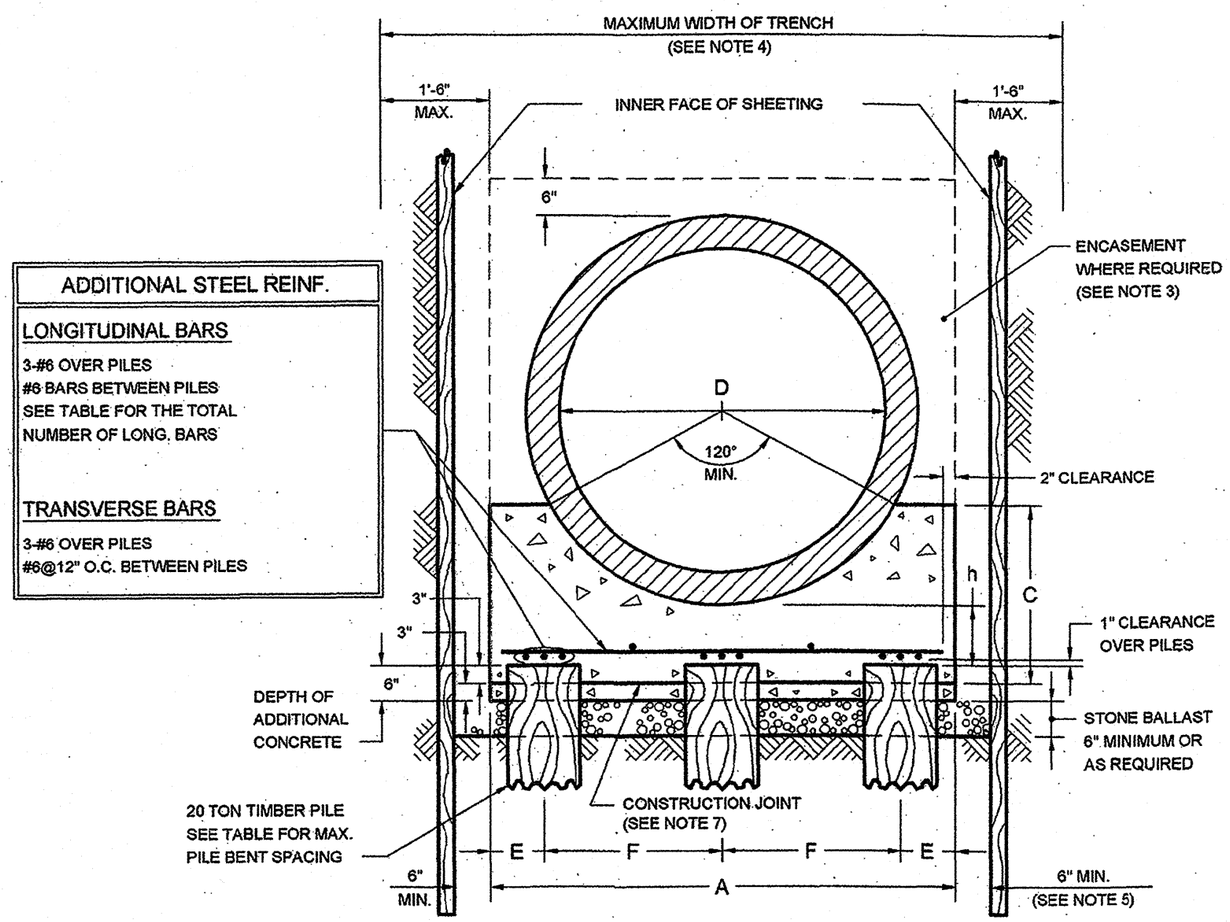

ADDITIONAL STEEL REINF.

LONGITUDINAL BARS

3-#6 OVER PILES
#6 BARS BETWEEN PILES
SEE TABLE FOR THE TOTAL NUMBER OF LONG. BARS

TRANSVERSE BARS

3-#6 OVER PILES
#6@12" O.C. BETWEEN PILES

D	A	h	C	E	F	MAXIMUM PILE BENT SPACING 20' COVER	MAXIMUM PILE BENT SPACING 25' COVER	#6 LONG. BARS	ADDITIONAL ITEMS/L.F. ADD. STL. REINF. (LBS.) 20' COVER	ADD. STL. REINF. (LBS.) 25' COVER	ADD. CONC. CU. YD.	STONE BALLAST CU. YD. PER L.F.
54"	6'-5"	10"	2'-6"	9"	2'-5 1/2"	5'-3"	4'-9"	11	28.71	29.99	0.1189	0.1744
60"	7'-0"	11"	2'-8"	12"	2'-6"	4'-9"	4'-3"	11	31.28	30.66	0.1297	0.1852
66"	7'-7"	12"	2'-11"	12"	2'-9 1/2"	4'-3"	4'-0"	11	31.90	32.86	0.1405	0.1960
72"	8'-2"	13"	3'-2"	12"	3'-1"	4'-0"	3'-6"	13	37.18	36.34	0.1513	0.2068
78"	8'-9"	14"	3'-5"	12"	3'-4 1/2"	3'-6"	3'-3"	13	37.59	38.98	0.1621	0.2176
84"	9'-4"	15"	3'-7"	12"	3'-8"	3'-3"	3'-0"	13	40.33	42.06	0.1729	0.2284
90"	9'-11"	17"	3'-11"	12"	3'-11 1/2"	3'-0"	2'-9"	15	46.53	48.71	0.1837	0.2392
96"	10'-6"	18"	4'-2"	12"	4'-3"	3'-0"	2'-6"	15	47.99	53.01	0.1945	0.2500

NOTES:

(1) CRADLE AND ENCASEMENT ARE CLASS 40 CONCRETE. REBARS-GRADE 60.

(2) ENTIRE CRADLE OR ENCASEMENT IS TO BE PLACED MONOLITHICALLY ABOVE THE CONSTRUCTION JOINT.

(3) ENCASEMENT REQUIRED ON PIPE WHICH HAS A COVER, FROM FINAL GRADE TO INNER TOP OF THE PIPE, OF LESS THAN FOUR (4) FEET OR WHEN THE UPPER LIMIT OF COVER FOR CLASS V PIPE IS EXCEEDED.

(4) UNLESS OTHERWISE APPROVED BY THE ENGINEER, THE MAX. WIDTH OF TRENCH SHALL BE SUCH THAT THE MAX. WIDTH BETWEEN INNER FACES OF THE LOWEST STAGE OF SHEETING OR ROCK CUT LINES, FROM SUBGRADE OF TRENCH TO A MIN. HEIGHT OF TWO (2) FEET ABOVE THE OUTER TOP OF THE PIPE, SHALL NOT BE GREATER THAN THE STANDARD CRADLE WIDTH PLUS EIGHTEEN (18) INCHES MAXIMUM EACH SIDE.

(5) SIX (6) INCH MINIMUM SHALL BE MAINTAINED AT ALL TIMES, EXCEPT WHERE SHEETING IS TO BE USED AS FORMWORK.

(6) CRADLE WIDTH "A" IS BASED ON WALL "B" FOR CLASS III, IV & V P.R.C.P.

(7) CONSTRUCTION JOINT TO BE UTILIZED WHENEVER GROUND CONDITIONS PREVENT PROPER SUPPORT OF PIPE.

Leze W. Carr P.E.
ASSISTANT COMMISSIONER, DESIGN
DEPARTMENT OF DESIGN AND CONSTRUCTION

7/9/07
DATE

Magdi Iwasa P.E.
DIRECTOR OF ENGINEERING
DEPARTMENT OF ENVIRONMENTAL PROTECTION

8/10/07
DATE

REVISED JULY 2004: S. MELAMED

CITY OF NEW YORK
DEPARTMENT OF ENVIRONMENTAL PROTECTION

SE6

STANDARD FOR 24" DIA. TO 60" DIA. CIRCULAR PRECAST REINFORCED CONCRETE PIPE ON CONCRETE CRADLE ON PILES - 2 PILE BENTS

(5', 10' AND 15' COVER)

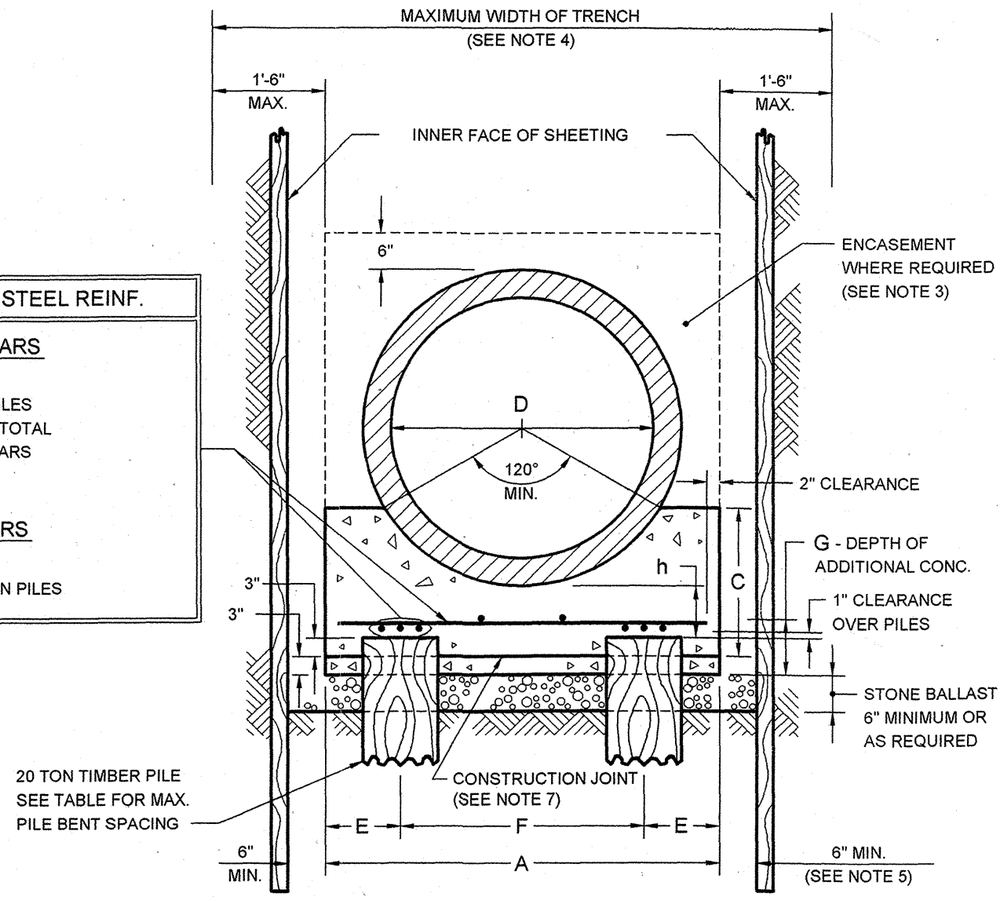

ADDITIONAL STEEL REINF.

LONGITUDINAL BARS

3-#6 OVER PILES
#6 BARS BETWEEN PILES
SEE TABLE FOR THE TOTAL
NUMBER OF LONG. BARS

TRANSVERSE BARS

3-#6 OVER PILES
#6@12" O.C. BETWEEN PILES

D	A	h	C	E	F	G	MAXIMUM PILE BENT SPACING			#6 LONG. BARS	ADDITIONAL ITEMS/L.F.				STONE BALLAST CU. YD. PER L.F.
											ADD. STL. REINF. (LBS.)			ADD. CONC. CU. YD.	
							5' COVER	10' COVER	15' COVER		5' COVER	10' COVER	15' COVER		
24"	3'-6"	9"	1'-8"	9"	2'-0"	9"	6'-0"	6'-0"	6'-0"	7	16.86	16.86	16.86	0.0973	0.1204
30"	4'-1"	8"	1'-9"	9"	2'-7"	8"	6'-0"	6'-0"	6'-0"	7	18.03	18.03	18.03	0.1009	0.1312
36"	4'-8"	7"	1'-9"	12"	2'-8"	6"	6'-0"	6'-0"	5'-6"	7	19.20	19.20	18.80	0.0865	0.1420
42"	5'-3"	8"	2'-0"	12"	3'-3"	6"	6'-0"	6'-0"	4'-9"	8	21.87	21.87	22.90	0.0973	0.1528
48"	5'-10"	9"	2'-3"	12"	3'-10"	6"	6'-0"	5'-6"	4'-3"	9	24.54	24.04	25.19	0.1081	0.1636
54"	6'-5"	10"	2'-6"	12"	4'-5"	6"	6'-0"	4'-9"	4'-0"	9	25.70	26.99	27.23	0.1189	0.1744
60"	7'-0"	11"	2'-8"	12"	5'-0"	6"	6'-0"	4'-3"	3'-6"	10	28.38	29.16	29.33	0.1297	0.1852

NOTES:

(1) CRADLE AND ENCASEMENT ARE CLASS 40 CONCRETE. REBARS-GRADE 60.

(2) ENTIRE CRADLE OR ENCASEMENT IS TO BE PLACED MONOLITHICALLY ABOVE THE CONSTRUCTION JOINT.

(3) ENCASEMENT REQUIRED ON PIPE WHICH HAS A COVER, FROM FINAL GRADE TO INNER TOP OF THE PIPE, OF LESS THAN FOUR (4) FEET OR WHEN THE UPPER LIMIT OF COVER FOR CLASS V PIPE IS EXCEEDED.

(4) UNLESS OTHERWISE APPROVED BY THE ENGINEER, THE MAX. WIDTH OF TRENCH SHALL BE SUCH THAT THE MAX. WIDTH BETWEEN INNER FACES OF THE LOWEST STAGE OF SHEETING OR ROCK CUT LINES, FROM SUBGRADE OF TRENCH TO A MIN. HEIGHT OF TWO (2) FEET ABOVE THE OUTER TOP OF THE PIPE, SHALL NOT BE GREATER THAN THE STANDARD CRADLE WIDTH PLUS EIGHTEEN (18) INCHES MAXIMUM EACH SIDE.

(5) SIX (6) INCH MINIMUM SHALL BE MAINTAINED AT ALL TIMES, EXCEPT WHERE SHEETING IS TO BE USED AS FORMWORK.

(6) CRADLE WIDTH "A" IS BASED ON WALL "B" FOR CLASS III, IV & V P.R.C.P.

(7) CONSTRUCTION JOINT TO BE UTILIZED WHENEVER GROUND CONDITIONS PREVENT PROPER SUPPORT OF PIPE.

Lyle W. Cam P.E.
ASSISTANT COMMISSIONER, DESIGN
DEPARTMENT OF DESIGN AND CONSTRUCTION

7/9/07
DATE

Magdi Farag P.E.
DIRECTOR OF ENGINEERING
DEPARTMENT OF ENVIRONMENTAL PROTECTION

8/10/07
DATE

REVISED JULY 2004; C.A. NEVERSON

CITY OF NEW YORK
DEPARTMENT OF ENVIRONMENTAL PROTECTION

SE7

STANDARD FOR 66" DIA. TO 96" DIA. CIRCULAR PRECAST REINFORCED CONCRETE PIPE ON CONCRETE CRADLE ON PILES - 3 PILE BENTS

(5', 10' AND 15' COVER)

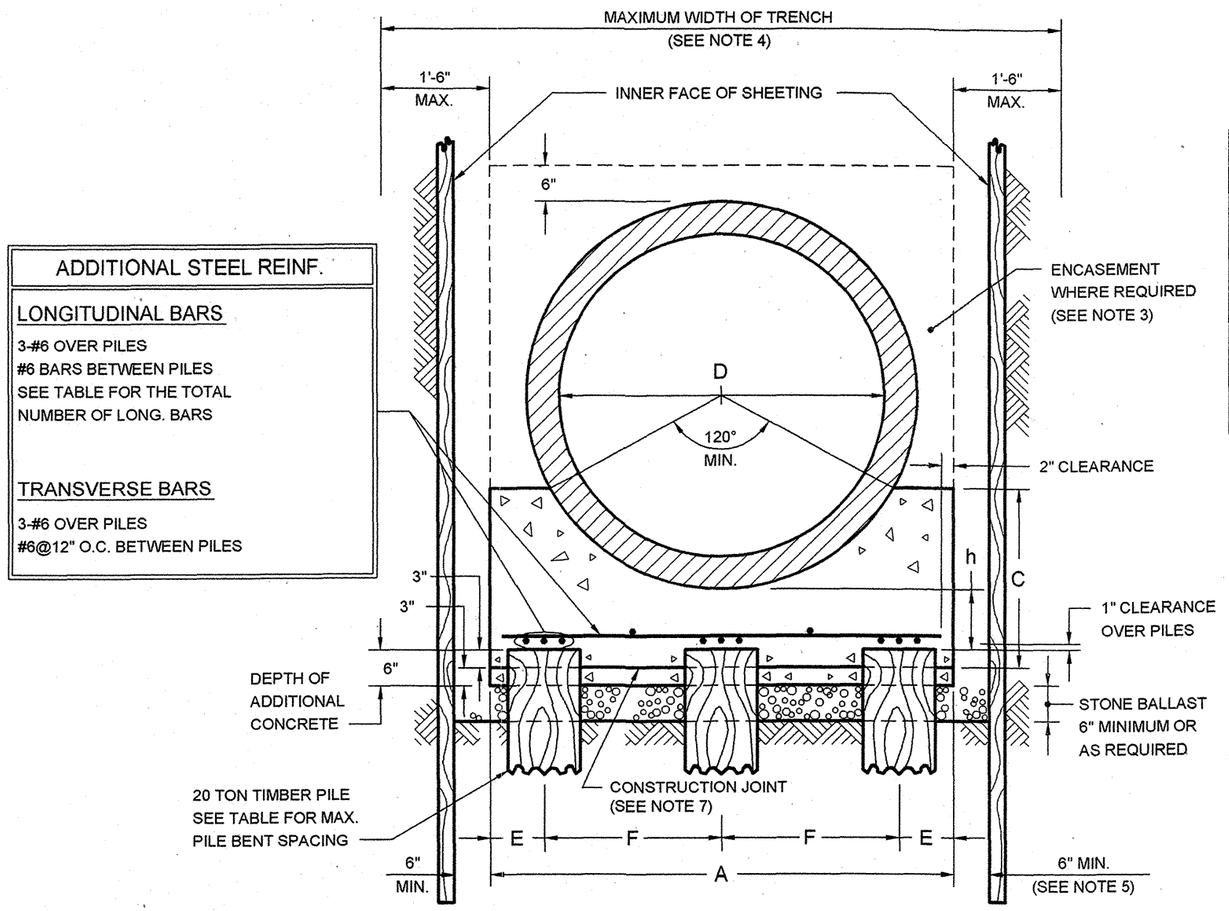

D	A	h	C	E	F	MAXIMUM PILE BENT SPACING			#6 LONG. BARS	ADDITIONAL ITEMS/L.F.				STONE BALLAST CU. YD. PER L.F.
						5' COVER	10' COVER	15' COVER		ADD. STL. REINF. (LBS.) 5' COVER	10' COVER	15' COVER	ADD. CONC. CU. YD.	
66"	7'-7"	12"	2'-11"	12"	2'-9 1/2"	6'-0"	6'-0"	4'-9"	11	31.05	31.05	32.57	0.1401	0.1960
72"	8'-2"	13"	3'-2"	12"	3'-1"	6'-0"	5'-6"	4'-6"	13	35.22	34.50	35.22	0.1513	0.2068
78"	8'-9"	14"	3'-5"	12"	3'-4 1/2"	6'-0"	5'-0"	4'-0"	13	36.39	37.23	38.49	0.1621	0.2176
84"	9'-4"	15"	3'-7"	12"	3'-8"	6'-0"	4'-6"	3'-9"	13	37.55	37.55	41.16	0.1729	0.2284
90"	9'-11"	17"	3'-11"	12"	3'-11 1/2"	5'-9"	4'-3"	3'-6"	15	42.56	42.86	43.10	0.1837	0.2392
96"	10'-6"	18"	4'-2"	12"	4'-3"	5'-3"	4'-0"	3'-3"	15	42.90	45.44	46.03	0.1945	0.2500

NOTES:

(1) CRADLE AND ENCASEMENT ARE CLASS 40 CONCRETE. REBARS-GRADE 60.

(2) ENTIRE CRADLE OR ENCASEMENT IS TO BE PLACED MONOLITHICALLY ABOVE THE CONSTRUCTION JOINT.

(3) ENCASEMENT REQUIRED ON PIPE WHICH HAS A COVER, FROM FINAL GRADE TO INNER TOP OF THE PIPE, OF LESS THAN FOUR (4) FEET OR WHEN THE UPPER LIMIT OF COVER FOR CLASS V PIPE IS EXCEEDED.

(4) UNLESS OTHERWISE APPROVED BY THE ENGINEER, THE MAX. WIDTH OF TRENCH SHALL BE SUCH THAT THE MAX. WIDTH BETWEEN INNER FACES OF THE LOWEST STAGE OF SHEETING OR ROCK CUT LINES, FROM SUBGRADE OF TRENCH TO A MIN. HEIGHT OF TWO (2) FEET ABOVE THE OUTER TOP OF THE PIPE, SHALL NOT BE GREATER THAN THE STANDARD CRADLE WIDTH PLUS EIGHTEEN (18) INCHES MAXIMUM EACH SIDE.

(5) SIX (6) INCH MINIMUM SHALL BE MAINTAINED AT ALL TIMES, EXCEPT WHERE SHEETING IS TO BE USED AS FORMWORK.

(6) CRADLE WIDTH "A" IS BASED ON WALL "B" FOR CLASS III, IV & V P.R.C.P.

(7) CONSTRUCTION JOINT TO BE UTILIZED WHENEVER GROUND CONDITIONS PREVENT PROPER SUPPORT OF PIPE.

Sege W. Lam P.E.
ASSISTANT COMMISSIONER, DESIGN
DEPARTMENT OF DESIGN AND CONSTRUCTION

7/9/07
DATE

Magdi Farag P.E.
DIRECTOR OF ENGINEERING
DEPARTMENT OF ENVIRONMENTAL PROTECTION

8/10/07
DATE

REVISED JULY 2004: C.A. NEVERSON

CITY OF NEW YORK
DEPARTMENT OF ENVIRONMENTAL PROTECTION

SE8

STANDARD FOR HORIZONTAL ELLIPTICAL PRECAST REINFORCED CONCRETE PIPE ON CONCRETE CRADLE ON EARTH OR ON ROCK

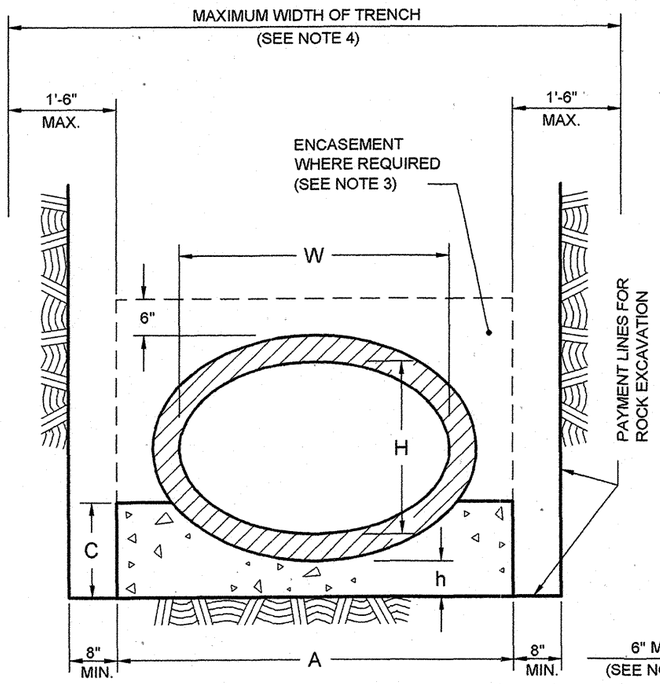

SECTION ON ROCK

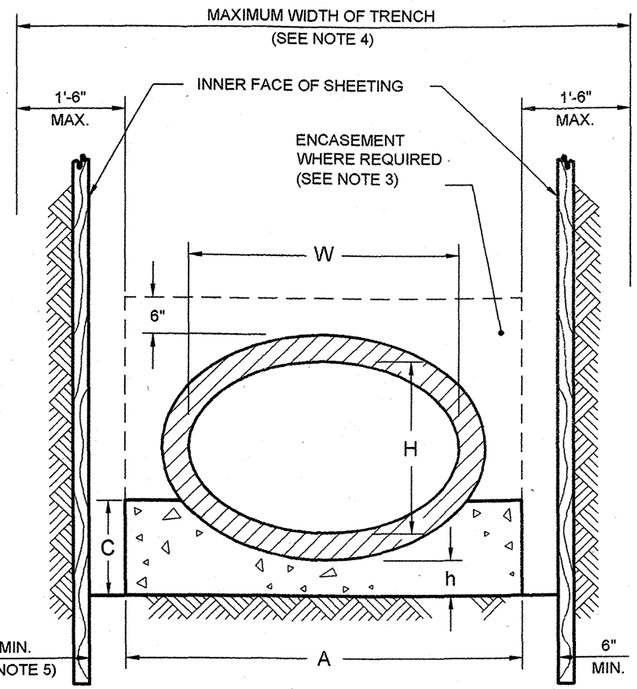

SECTION ON EARTH

W	H	EQUIV. DIA.	A	h	C	CONC. CRADLE CU. YD./L.F.	CONC. ENCSMT. CU. YD./L.F.	MAXIMUM COVER FOR PIPE CLASS	
								HE-III	HE-IV
23"	14"	18"	3'-6"	6"	0'-11"	0.0961	0.2281	12'-6"	19'-0"
30"	19"	24"	4'-1"	6"	1'-1"	0.1219	0.2846	13'-0"	19'-6"
38"	24"	30"	4'-10"	6"	1'-2"	0.1510	0.3594	13'-0"	19'-6"
45"	29"	36"	5'-6"	6"	1'-4"	0.1845	0.4343	13'-0"	19'-6"
53"	34"	42"	6'-3"	7"	1'-6"	0.2377	0.5395	13'-0"	20'-0"
60"	38"	48"	6'-11"	7"	1'-7"	0.2721	0.6207	13'-0"	20'-0"
68"	43"	54"	7'-8"	8"	1'-10"	0.3422	0.7437	13'-6"	20'-6"
76"	48"	60"	8'-5"	9"	2'-0"	0.4139	0.8774	13'-6"	20'-6"
83"	53"	66"	9'-1"	10"	2'-3"	0.4947	1.0137	13'-6"	20'-6"
91"	58"	72"	9'-10"	10"	2'-4"	0.5499	1.1376	14'-0"	21'-0"
98"	63"	78"	10'-6"	11"	2'-7"	0.6385	1.2725	14'-0"	21'-0"
106"	68"	84"	11'-3"	12"	2'-10"	0.7467	1.4638	14'-0"	21'-0"
113"	72"	90"	11'-11"	13"	3'-0"	0.8434	1.6266	14'-6"	21'-0"
121"	77"	96"	12'-8"	14"	3'-2"	0.9544	1.8192	15'-0"	21'-6"

NOTES:

(1) CRADLE AND ENCASEMENT ARE CLASS 40 CONCRETE.

(2) ENTIRE CRADLE OR ENCASEMENT IS TO BE PLACED MONOLITHICALLY.

(3) ENCASEMENT REQUIRED ON PIPE WHICH HAS A COVER, FROM FINAL GRADE TO INNER TOP OF THE PIPE, OF LESS THAN FOUR (4) FEET OR WHEN THE UPPER LIMIT OF COVER FOR CLASS HE-IV PIPE IS EXCEEDED.

(4) UNLESS OTHERWISE APPROVED BY THE ENGINEER, THE MAX. WIDTH OF TRENCH SHALL BE SUCH THAT THE MAX. WIDTH BETWEEN INNER FACES OF THE LOWEST STAGE OF SHEETING OR ROCK CUT LINES, FROM SUBGRADE OF TRENCH TO A MIN. HEIGHT OF TWO (2) FEET ABOVE THE OUTER TOP OF THE PIPE, SHALL NOT BE GREATER THAN THE STANDARD CRADLE WIDTH PLUS EIGHTEEN (18) INCHES MAXIMUM EACH SIDE.

(5) SIX (6) INCH MINIMUM SHALL BE MAINTAINED AT ALL TIMES, EXCEPT WHERE SHEETING IS TO BE USED AS FORMWORK.

(6) CRADLE WIDTH "A" IS BASED ON MINIMUM WALL THICKNESS (ASTM C507) FOR CLASS HE-III AND HE-IV P.R.C.P.

REVISED JULY 2004: C.A. NEVERSON

P.E.
ASSISTANT COMMISSIONER, DESIGN
DEPARTMENT OF DESIGN AND CONSTRUCTION

7/9/07
DATE

P.E.
DIRECTOR OF ENGINEERING
DEPARTMENT OF ENVIRONMENTAL PROTECTION

8/10/07
DATE

CITY OF NEW YORK
DEPARTMENT OF ENVIRONMENTAL PROTECTION

SE9

STANDARD FOR 23"W X 14"H TO 76"W X 48"H HORIZONTAL ELLIPTICAL PRECAST REINFORCED CONCRETE PIPE ON CONCRETE CRADLE ON PILES - 2 PILE BENTS

(5', 10' AND 15' COVER)

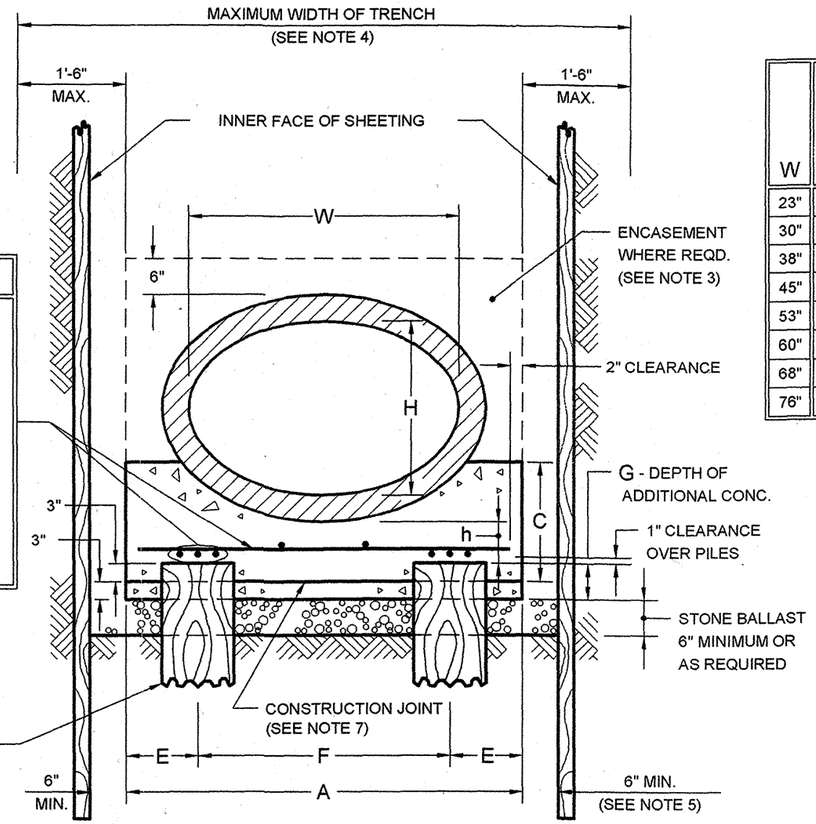

ADDITIONAL STEEL REINF.

LONGITUDINAL BARS

3-#6 OVER PILES
#6 BARS BETWEEN PILES
SEE TABLE FOR THE TOTAL
NUMBER OF LONG. BARS

TRANSVERSE BARS

3-#6 OVER PILES
#6@12" O.C. BETWEEN PILES

W	H	EQUIV. DIA.	A	h	C	E	F	G	MAXIMUM PILE BENT SPACING			#6 LONG. BARS	ADDITIONAL ITEMS/L.F.				STONE BALLAST CU. YD. PER L.F.
													ADD. STL. REINF. (LBS.)			ADD. CONC. CU. YD.	
									5' COVER	10' COVER	15' COVER		5' COVER	10' COVER	15' COVER		
23"	14"	18"	3'-6"	8"	1'-4"	9"	2'-0"	8"	6'-0"	6'-0"	6'-0"	7	16.86	16.86	16.86	0.0865	0.1204
30"	19"	24"	4'-1"	8"	1'-6"	9"	2'-7"	8"	6'-0"	6'-0"	6'-0"	7	18.03	18.03	18.03	0.1009	0.1312
38"	24"	30"	4'-10"	8"	1'-7"	12"	2'-10"	8"	6'-0"	6'-0"	6'-0"	8	21.03	21.03	21.03	0.1194	0.1451
45"	29"	36"	5'-6"	7"	1'-8"	12"	3'-6"	7"	6'-0"	6'-0"	5'-3"	8	22.37	22.37	22.37	0.1189	0.1574
53"	34"	42"	6'-3"	7"	1'-9"	12"	4'-3"	6"	6'-0"	5'-3"	4'-6"	9	25.37	25.37	25.37	0.1158	0.1713
60"	38"	48"	6'-11"	9"	2'-0"	12"	4'-11"	8"	6'-0"	4'-9"	4'-0"	10	28.21	29.60	29.86	0.1708	0.1836
68"	43"	54"	7'-8"	9"	2'-2"	15"	5'-2"	7"	6'-0"	4'-3"	3'-6"	10	29.71	30.57	30.76	0.1657	0.1975
76"	48"	60"	8'-5"	11"	2'-5"	15"	5'-11"	8"	5'-9"	4'-0"	3'-3"	11	33.42	34.74	35.20	0.2079	0.2114

NOTES:

(1) CRADLE AND ENCASEMENT ARE CLASS 40 CONCRETE. REBARS-GRADE 60.

(2) ENTIRE CRADLE OR ENCASEMENT IS TO BE PLACED MONOLITHICALLY ABOVE THE CONSTRUCTION JOINT.

(3) ENCASEMENT REQUIRED ON PIPE WHICH HAS A COVER, FROM FINAL GRADE TO INNER TOP OF THE PIPE, OF LESS THAN FOUR (4) FEET OR WHEN THE UPPER LIMIT OF COVER FOR CLASS HE-IV PIPE IS EXCEEDED.

(4) UNLESS OTHERWISE APPROVED BY THE ENGINEER, THE MAX. WIDTH OF TRENCH SHALL BE SUCH THAT THE MAX. WIDTH BETWEEN INNER FACES OF THE LOWEST STAGE OF SHEETING OR ROCK CUT LINES, FROM SUBGRADE OF TRENCH TO A MIN. HEIGHT OF TWO (2) FEET ABOVE THE OUTER TOP OF THE PIPE, SHALL NOT BE GREATER THAN THE STANDARD CRADLE WIDTH PLUS EIGHTEEN (18) INCHES MAXIMUM EACH SIDE.

(5) SIX (6) INCH MINIMUM SHALL BE MAINTAINED AT ALL TIMES, EXCEPT WHERE SHEETING IS TO BE USED AS FORMWORK.

(6) CRADLE WIDTH "A" IS BASED ON MINIMUM WALL THICKNESS (ASTM C507) FOR CLASS HE-III AND HE-IV P.R.C.P.

(7) CONSTRUCTION JOINT TO BE UTILIZED WHENEVER GROUND CONDITIONS PROPER SUPPORT OF PIPE.

P.E. 7/9/07
ASSISTANT COMMISSIONER, DESIGN
DEPARTMENT OF DESIGN AND CONSTRUCTION
DATE

P.E. 8/10/07
DIRECTOR OF ENGINEERING
DEPARTMENT OF ENVIRONMENTAL PROTECTION
DATE

REVISED JULY 2004: C.A. NEVERSON

SE10

CITY OF NEW YORK
DEPARTMENT OF ENVIRONMENTAL PROTECTION

SE10

STANDARD FOR 83"W x 53"H TO 121"W x 77"H HORIZONTAL ELLIPTICAL PRECAST REINFORCED CONCRETE PIPE ON CONCRETE CRADLE ON PILES - 3 PILE BENTS

(5', 10' AND 15' COVER)

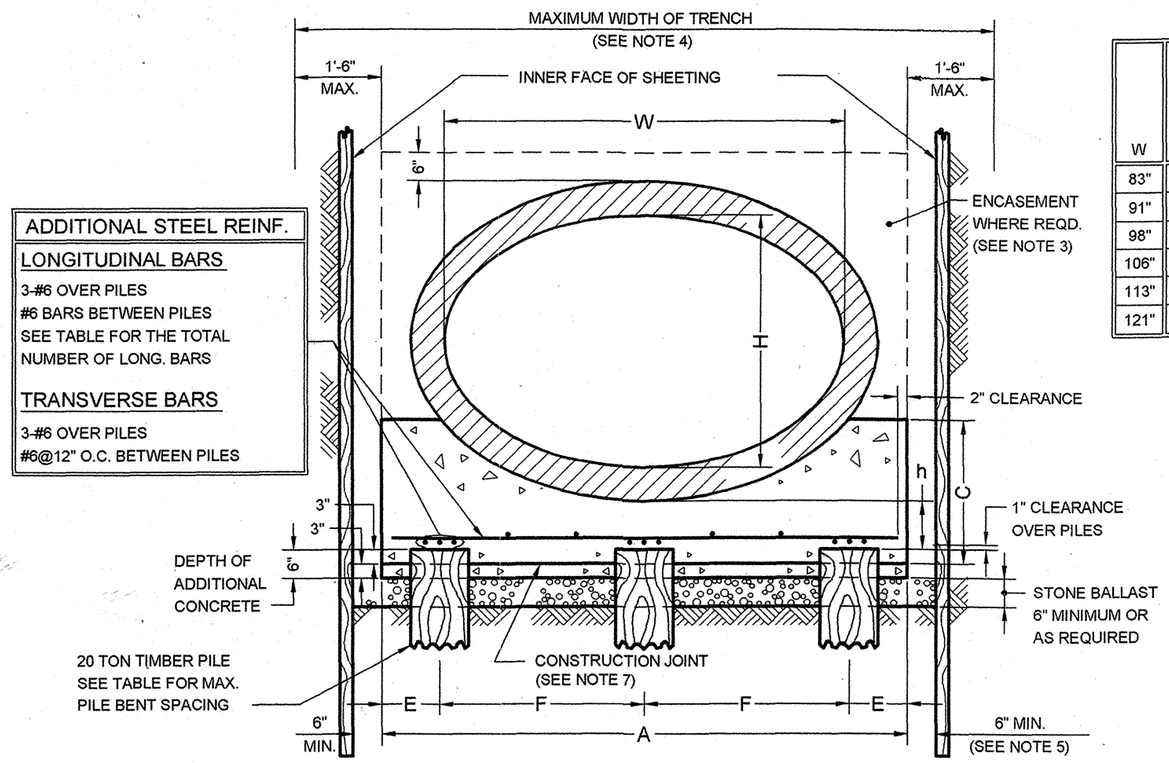

ADDITIONAL STEEL REINF.

LONGITUDINAL BARS

3-#6 OVER PILES
#6 BARS BETWEEN PILES
SEE TABLE FOR THE TOTAL NUMBER OF LONG. BARS

TRANSVERSE BARS

3-#6 OVER PILES
#6@12" O.C. BETWEEN PILES

W	H	EQUIV. DIA.	A	h	C	E	F	MAXIMUM PILE BENT SPACING 5' COVER	10' COVER	15' COVER	#6 LONG. BARS	ADDITIONAL ITEMS/L.F. ADD. STL. REINF. (LBS.) 5' COVER	10' COVER	15' COVER	ADD. CONC. CU. YD.	STONE BALLAST CU. YD. PER L.F.
83"	53"	66"	9'-1"	10"	2'-6"	12"	3'-6 1/2"	6'-0"	5'-3"	4'-6"	13	37.05	37.05	37.05	0.1682	0.2238
91"	58"	72"	9'-10"	10"	2'-7"	12"	3'-11"	6'-0"	5'-0"	4'-0"	15	41.56	42.51	43.94	0.1821	0.2377
98"	63"	78"	10'-6"	11"	2'-10"	12"	4'-3"	6'-0"	4'-6"	3'-6"	15	42.89	42.89	44.35	0.1945	0.2500
106"	68"	84"	11'-3"	12"	3'-1"	12"	4'-7 1/2"	5'-6"	4'-0"	3'-3"	15	43.40	47.13	47.76	0.2084	0.2639
113"	72"	90"	11'-11"	13"	3'-3"	12"	4'-11 1/2"	5'-3"	3'-9"	3'-0"	17	48.73	53.37	54.53	0.2207	0.2763
121"	77"	96"	12'-8"	14"	3'-5"	12"	5'-4"	4'-9"	3'-6"	2'-9"	17	52.84	52.00	59.22	0.2346	0.2902

NOTES:

(1) CRADLE AND ENCASEMENT ARE CLASS 40 CONCRETE. REBARS-GRADE 60.

(2) ENTIRE CRADLE OR ENCASEMENT IS TO BE PLACED MONOLITHICALLY ABOVE THE CONSTRUCTION JOINT.

(3) ENCASEMENT REQUIRED ON PIPE WHICH HAS A COVER, FROM FINAL GRADE TO INNER TOP OF THE PIPE, OF LESS THAN FOUR (4) FEET OR WHEN THE UPPER LIMIT OF COVER FOR CLASS HE-IV PIPE IS EXCEEDED.

(4) UNLESS OTHERWISE APPROVED BY THE ENGINEER, THE MAX. WIDTH OF TRENCH SHALL BE SUCH THAT THE MAX. WIDTH BETWEEN INNER FACES OF THE LOWEST STAGE OF SHEETING OR ROCK CUT LINES, FROM SUBGRADE OF TRENCH TO A MIN. HEIGHT OF TWO (2) FEET ABOVE THE OUTER TOP OF THE PIPE, SHALL NOT BE GREATER THAN THE STANDARD CRADLE WIDTH PLUS EIGHTEEN (18) INCHES MAXIMUM EACH SIDE.

(5) SIX (6) INCH MINIMUM SHALL BE MAINTAINED AT ALL TIMES, EXCEPT WHERE SHEETING IS TO BE USED AS FORMWORK.

(6) CRADLE WIDTH "A" IS BASED ON MINIMUM WALL THICKNESS (ASTM C507) FOR CLASS HE-III AND HE-IV P.R.C.P.

(7) CONSTRUCTION JOINT TO BE UTILIZED WHENEVER GROUND CONDITIONS PREVENT PROPER SUPPORT OF PIPE.

Lee W. Cara P.E. 7/9/07
ASSISTANT COMMISSIONER, DESIGN
DEPARTMENT OF DESIGN AND CONSTRUCTION
DATE

Magdi Farag P.E. 8/10/07
DIRECTOR OF ENGINEERING
DEPARTMENT OF ENVIRONMENTAL PROTECTION
DATE

REVISED DECEMBER 2006: L. ADRIEN

CITY OF NEW YORK
DEPARTMENT OF ENVIRONMENTAL PROTECTION

SE11

STANDARD FOR MANHOLE ON 8" DIA. TO 30" DIA. PIPE SEWERS IN DRY LOCATION

TYPE A-1 (12' MAX. COVER) AND TYPE A-2 (25' MAX. COVER)

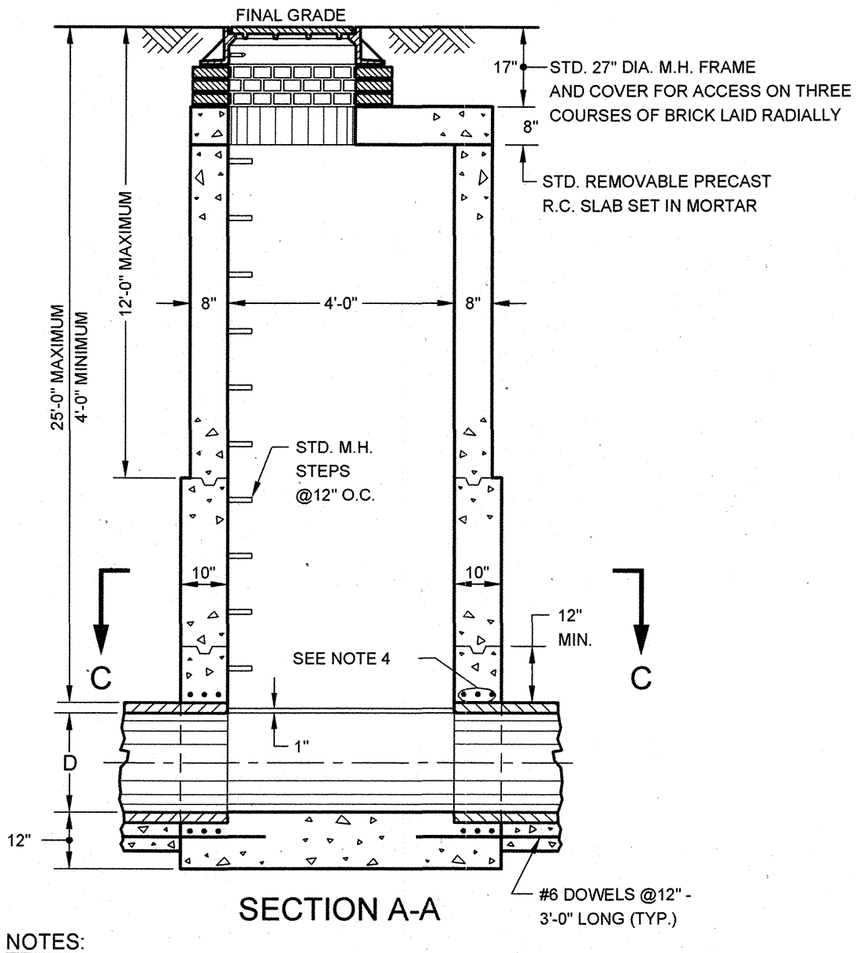

SECTION A-A

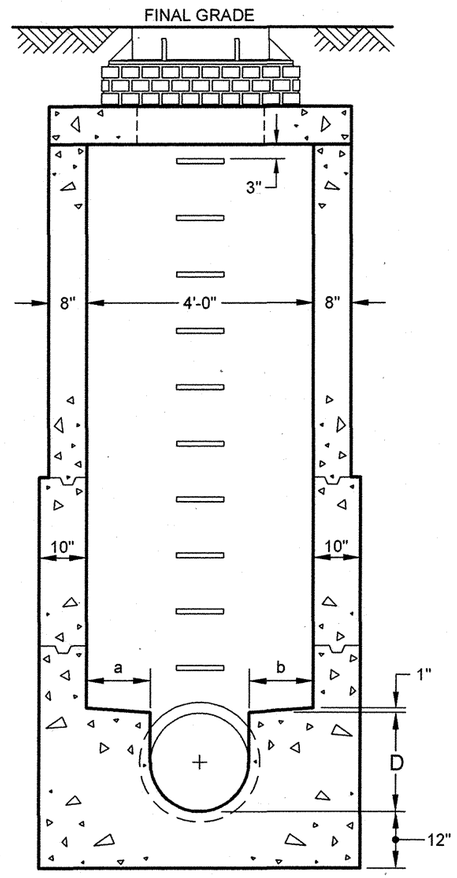

SECTION B-B

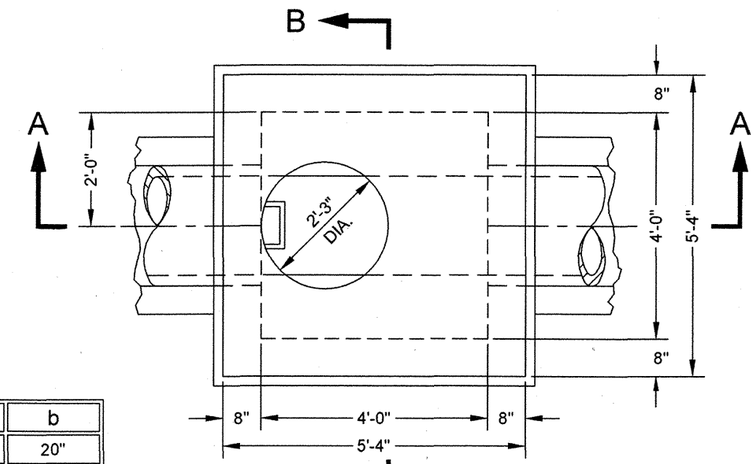

ROOF PLAN

D	a	b
8"	20"	20"
10"	19"	19"
12"	18"	18"
15"	16 1/2"	16 1/2"
18"	15"	15"
24"	12"	12"
30"	12"	6"

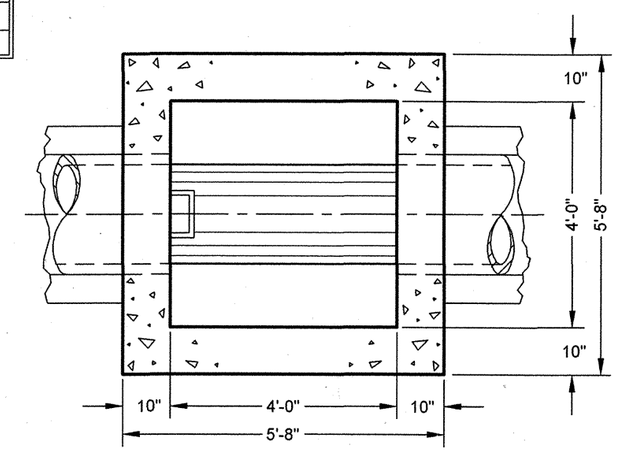

SECTION C-C

NOTES:

(1) WHEN LEGAL GRADE IS BELOW FINAL GRADE SEE SEWER STANDARD NO. 38.

(2) KEYED CONSTRUCTION JOINTS ARE REQUIRED BETWEEN ANY SUCCESSIVE POURS.

(3) CONCRETE IS TO BE CLASS 40. REBARS-GRADE 60.

(4) FOR ALL PIPE SEWERS EIGHTEEN (18) INCHES IN DIAMETER AND GREATER, ADD 3-#6@3" ABOVE AND BELOW THE PIPE.

Peaze W. Cann P.E. 7/9/07
ASSISTANT COMMISSIONER, DESIGN
DEPARTMENT OF DESIGN AND CONSTRUCTION
DATE

Magdi [signature] P.E. 8/10/07
DIRECTOR OF ENGINEERING
DEPARTMENT OF ENVIRONMENTAL PROTECTION
DATE

REVISED JULY 2004: C. NEVERSON

CITY OF NEW YORK
DEPARTMENT OF ENVIRONMENTAL PROTECTION

SE12

STANDARD FOR MANHOLE ON 8" DIA. TO 30" DIA. PIPE SEWERS ON PILES IN DRY LOCATIONS

TYPE A-1 (12' MAX. COVER) AND TYPE A-2 (25' MAX. COVER)

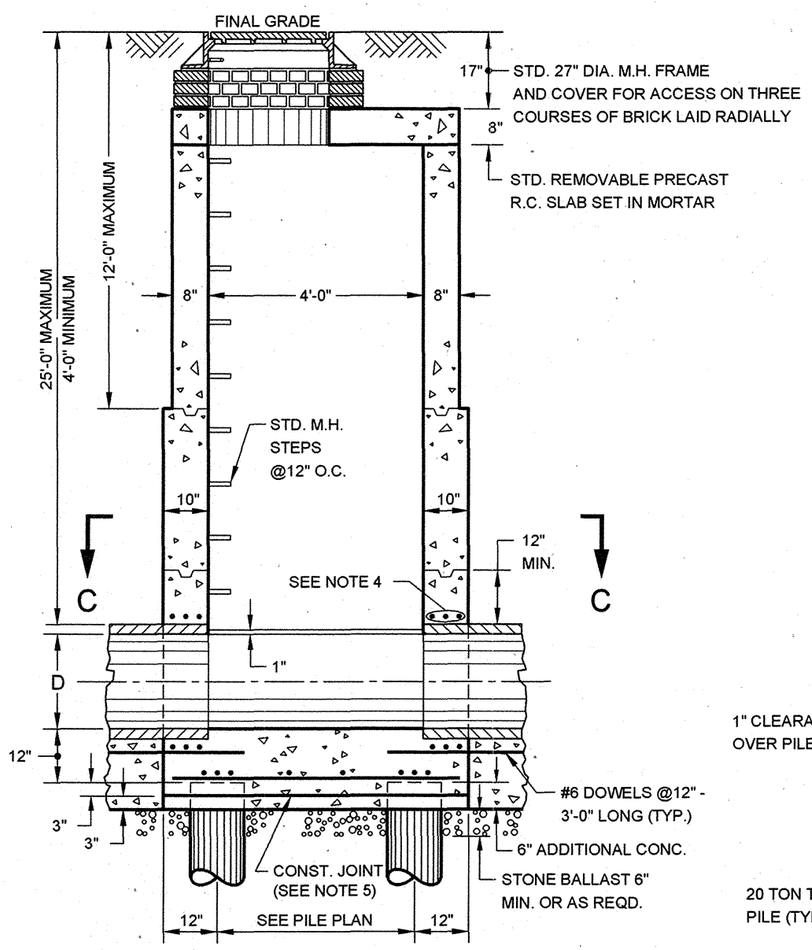

SECTION A-A

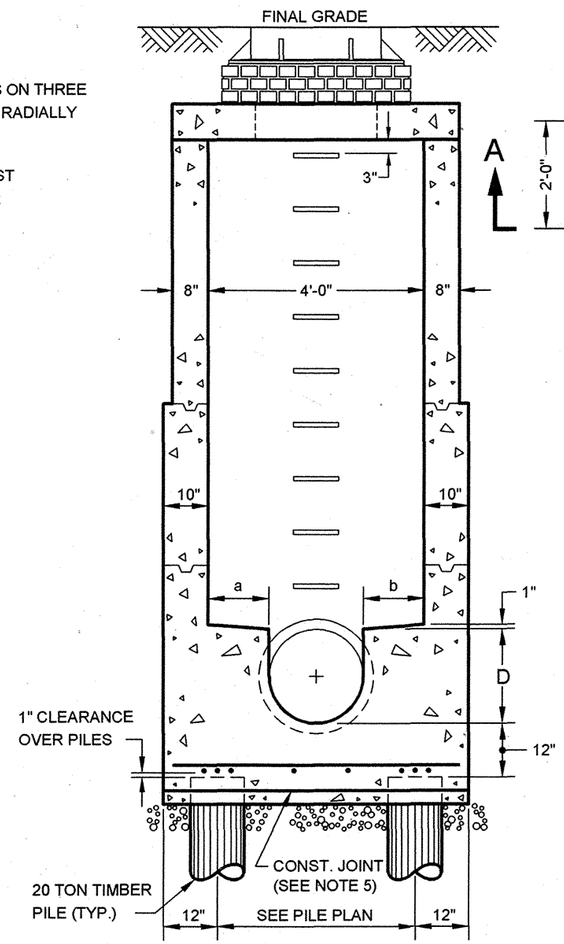

SECTION B-B

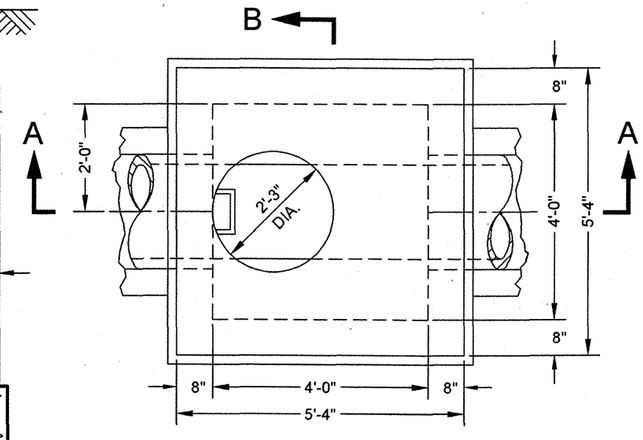

ROOF PLAN

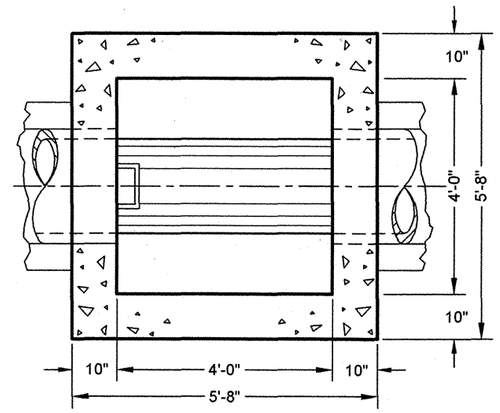

SECTION C-C

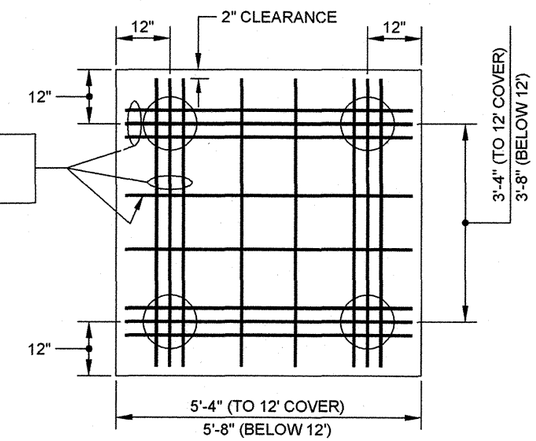

PILE PLAN

ADDITIONAL STEEL REINF.
3-#6@3" OVER PILES B.W.
#6@12" BETWEEN PILES B.W.

D	a	b
8"	20"	20"
10"	19"	19"
12"	18"	18"
15"	16 1/2"	16 1/2"
18"	15"	15"
24"	12"	12"
30"	12"	6"

NOTES:

(1) WHEN LEGAL GRADE IS BELOW FINAL GRADE SEE SEWER STANDARD NO. 38.

(2) KEYED CONSTRUCTION JOINTS ARE REQUIRED BETWEEN ANY SUCCESSIVE POURS.

(3) CONCRETE IS TO BE CLASS 40. REBARS-GRADE 60.

(4) FOR ALL PIPE SEWERS EIGHTEEN (18) INCHES IN DIAMETER AND GREATER, ADD 3-#6@3" ABOVE AND BELOW THE PIPE.

(5) CONSTRUCTION JOINT TO BE UTILIZED WHENEVER GROUND CONDITIONS PREVENT SUPPORT OF PIPE.

George W. Larson P.E. — 7/9/07
ASSISTANT COMMISSIONER, DESIGN
DEPARTMENT OF DESIGN AND CONSTRUCTION
DATE

Vincedi Tarone P.E. — 8/10/07
DIRECTOR OF ENGINEERING
DEPARTMENT OF ENVIRONMENTAL PROTECTION
DATE

REVISED JULY 2004: C. NEVERSON

CITY OF NEW YORK
DEPARTMENT OF ENVIRONMENTAL PROTECTION

SE13

STANDARD FOR SHALLOW MANHOLE ON 8" DIA. TO 30" DIA. PIPE SEWERS

TYPE A-3 (LESS THAN 4'-0" COVER)

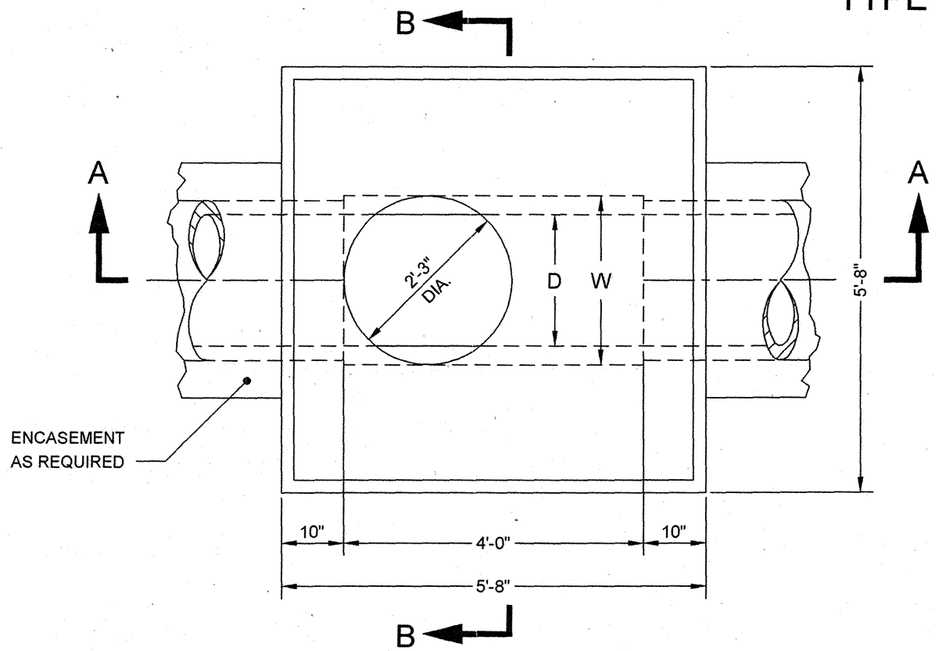

ROOF PLAN

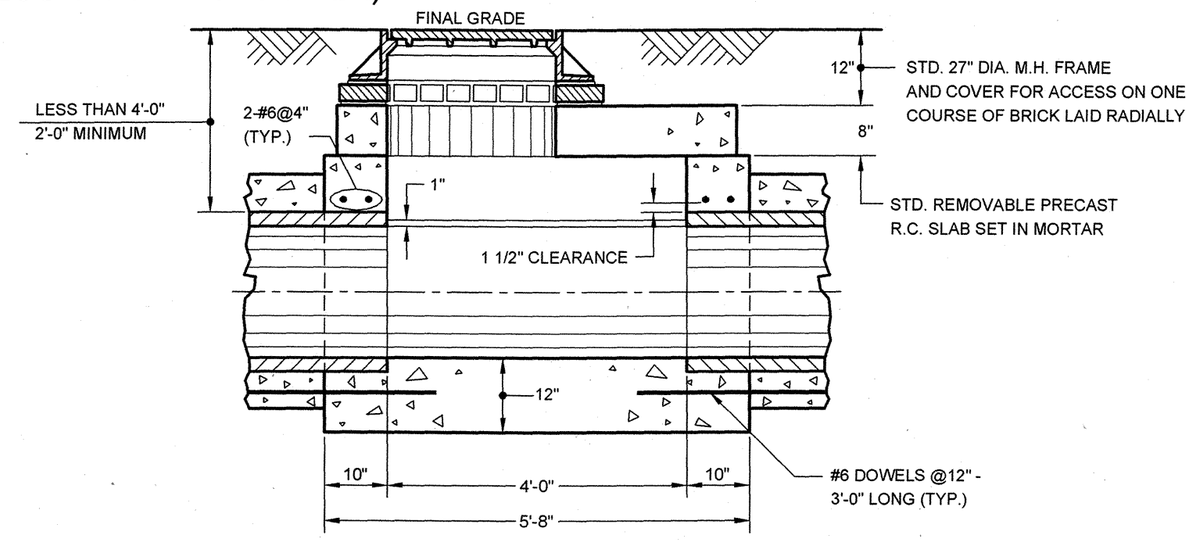

SECTION A-A

D	W
8"-24"	27"
30"	30"

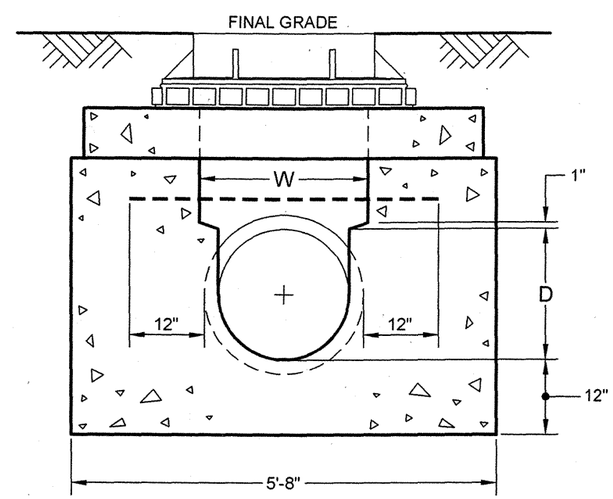

SECTION B-B

NOTES:

(1) WHEN PILES ARE REQUIRED, REFER TO STANDARD MANHOLE TYPE A-2 FOR PILE DETAILS.

(2) CONCRETE IS TO BE CLASS 40. REBARS-GRADE 60.

REVISED JULY 2004: C. NEVERSON

P.E. — 7/9/07 DATE
ASSISTANT COMMISSIONER, DESIGN
DEPARTMENT OF DESIGN AND CONSTRUCTION

P.E. — 8/10/07 DATE
DIRECTOR OF ENGINEERING
DEPARTMENT OF ENVIRONMENTAL PROTECTION

CITY OF NEW YORK
DEPARTMENT OF ENVIRONMENTAL PROTECTION

SE14

STANDARD FOR MANHOLE ON 8" DIA. TO 30" DIA. PIPE SEWERS IN WET LOCATION

TYPE B-1 (12' MAX. COVER) AND TYPE B-2 (25' MAX. COVER)

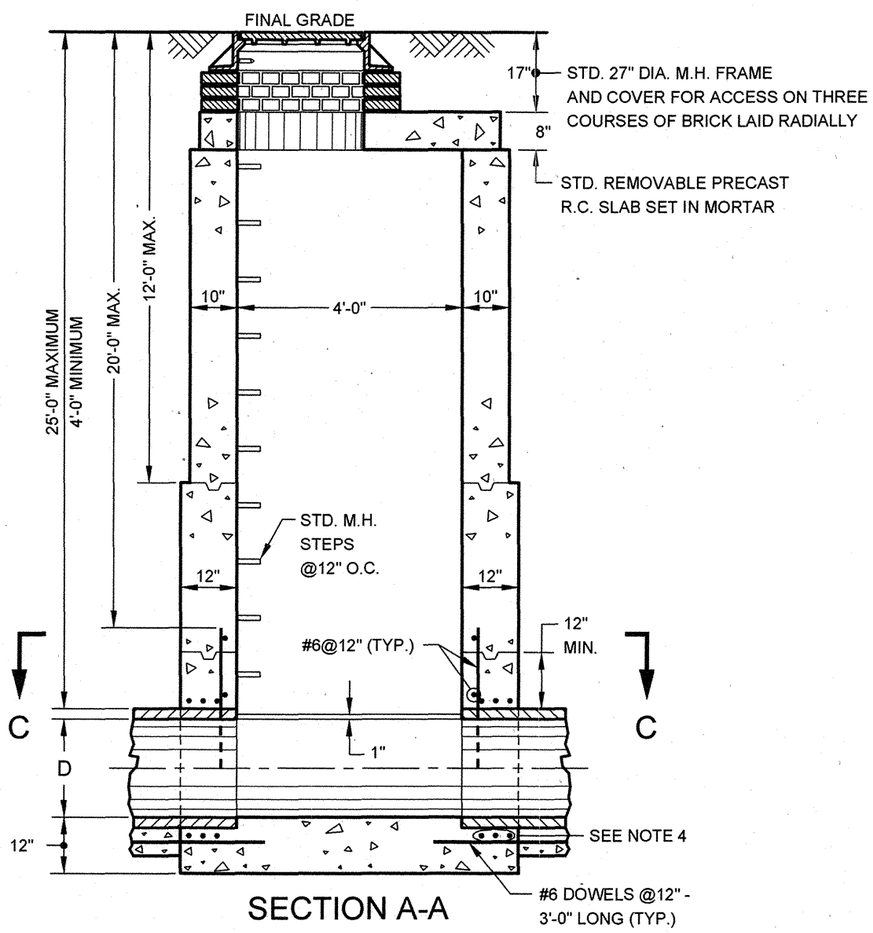

SECTION A-A

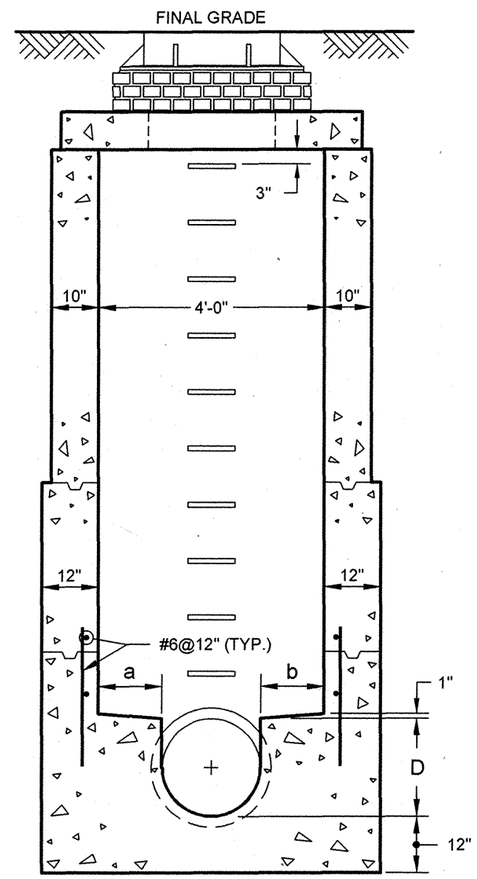

SECTION B-B

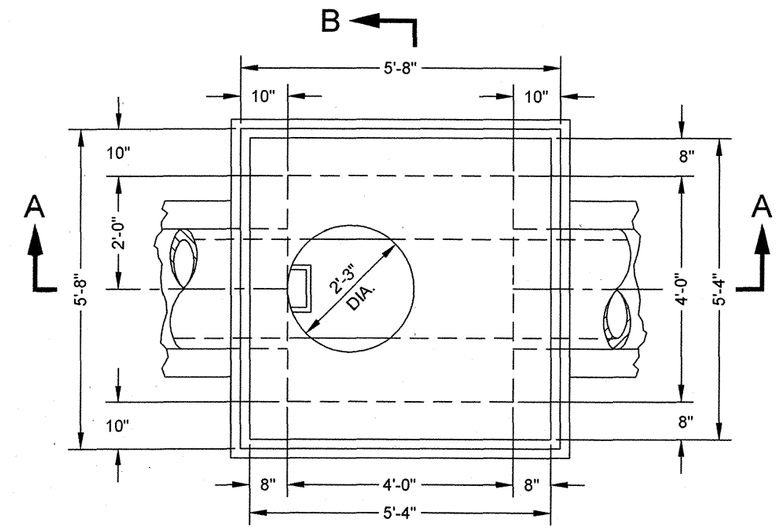

ROOF PLAN

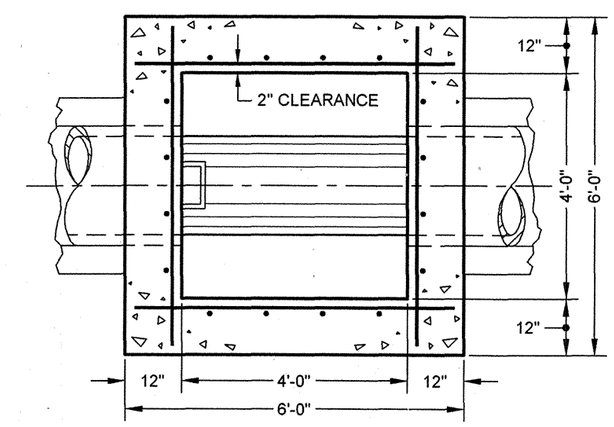

SECTION C-C

D	a	b
8"	20"	20"
10"	19"	19"
12"	18"	18"
15"	16 1/2"	16 1/2"
18"	15"	15"
24"	12"	12"
30"	12"	6"

NOTES:

(1) WHEN LEGAL GRADE IS BELOW FINAL GRADE SEE SEWER STANDARD NO. 38.

(2) KEYED CONSTRUCTION JOINTS ARE REQUIRED BETWEEN ANY SUCCESSIVE POURS.

(3) CONCRETE IS TO BE CLASS 40. REBARS-GRADE 60.

(4) FOR ALL PIPE SEWERS EIGHTEEN (18) INCHES IN DIAMETER AND GREATER, ADD 3-#6@3" ABOVE AND BELOW THE PIPE.

George W. Conor P.E. 7/9/07
ASSISTANT COMMISSIONER, DESIGN
DEPARTMENT OF DESIGN AND CONSTRUCTION
DATE

Magdi Ramaz P.E. 8/10/07
DIRECTOR OF ENGINEERING
DEPARTMENT OF ENVIRONMENTAL PROTECTION
DATE

REVISED MAY 2007: L. ADRIEN

SE15

CITY OF NEW YORK
DEPARTMENT OF ENVIRONMENTAL PROTECTION

SE15

STANDARD FOR MANHOLE ON 8" DIA. TO 30" DIA. PIPE SEWERS ON PILES IN WET LOCATION

TYPE B-1 (12' MAX. COVER) AND TYPE B-2 (25' MAX. COVER)

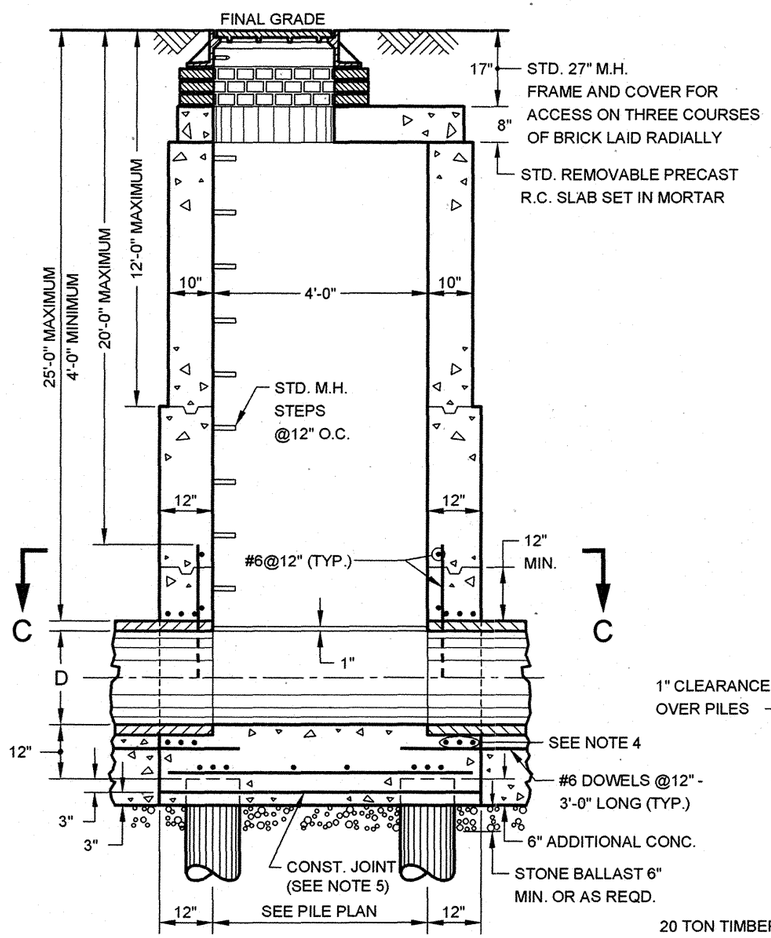

SECTION A-A

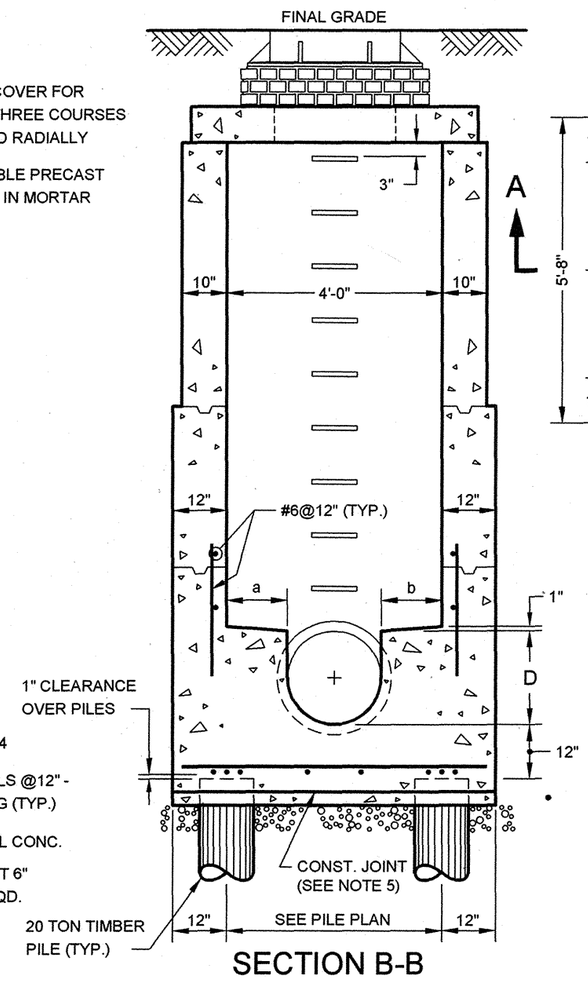

SECTION B-B

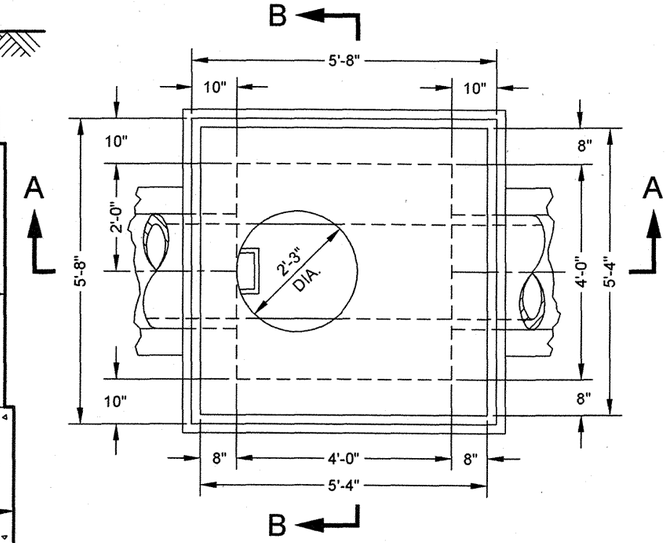

ROOF PLAN

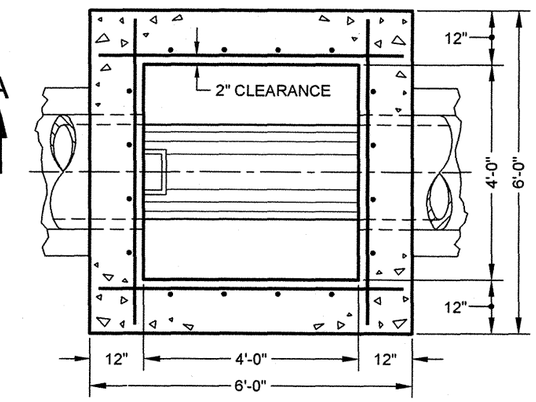

SECTION C-C

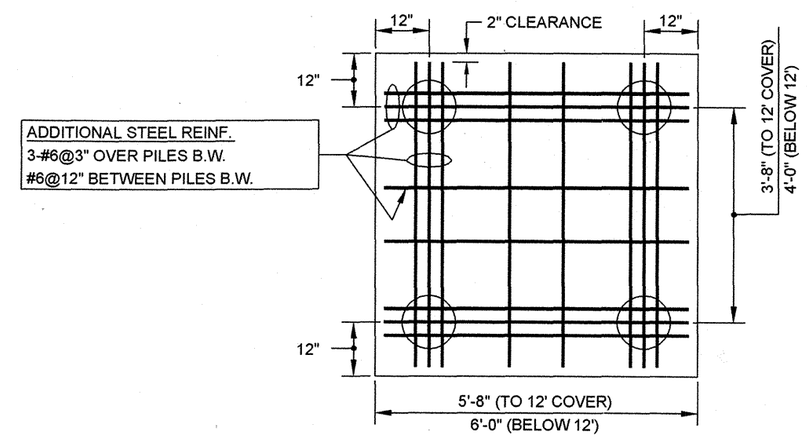

PILE PLAN

D	a	b
8"	20"	20"
10"	19"	19"
12"	18"	18"
15"	16 1/2"	16 1/2"
18"	15"	15"
24"	12"	12"
30"	12"	6"

NOTES:

(1) WHEN LEGAL GRADE IS BELOW FINAL GRADE SEE SEWER STANDARD NO. 38.

(2) KEYED CONSTRUCTION JOINTS ARE REQUIRED BETWEEN ANY SUCCESSIVE POURS.

(3) CONCRETE IS TO BE CLASS 40. REBARS-GRADE 60.

(4) FOR ALL PIPE SEWERS EIGHTEEN (18) INCHES IN DIAMETER AND GREATER, ADD 3-#6@3" ABOVE AND BELOW THE PIPE.

(5) CONSTRUCTION JOINT TO BE UTILIZED WHENEVER GROUND CONDITIONS PREVENT SUPPORT OF PIPE.

George W. Conn P.E. 7/9/07
ASSISTANT COMMISSIONER, DESIGN
DEPARTMENT OF DESIGN AND CONSTRUCTION
DATE

Maedi Fana P.E. 8/10/07
DIRECTOR OF ENGINEERING
DEPARTMENT OF ENVIRONMENTAL PROTECTION
DATE

REVISED JUNE 2004: L. ADRIEN

CITY OF NEW YORK
DEPARTMENT OF ENVIRONMENTAL PROTECTION

STANDARD FOR MANHOLE ON 36" DIA. TO 60" DIA. PIPE SEWERS

TYPE C-1 (12' MAX. COVER) AND TYPE C-2 (25' MAX. COVER)

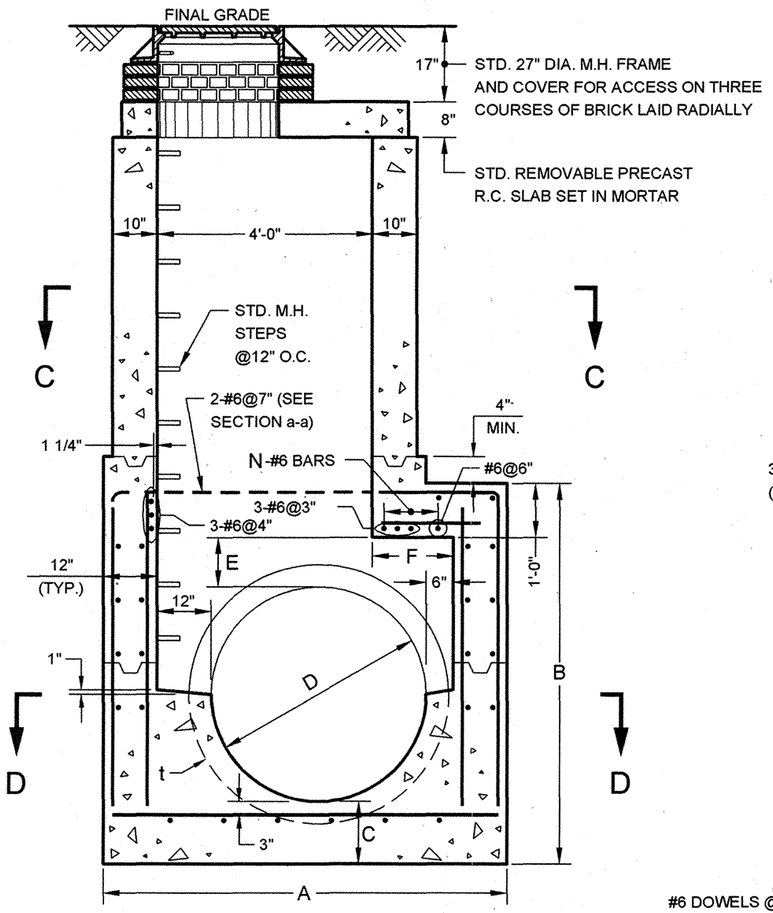

SECTION A-A

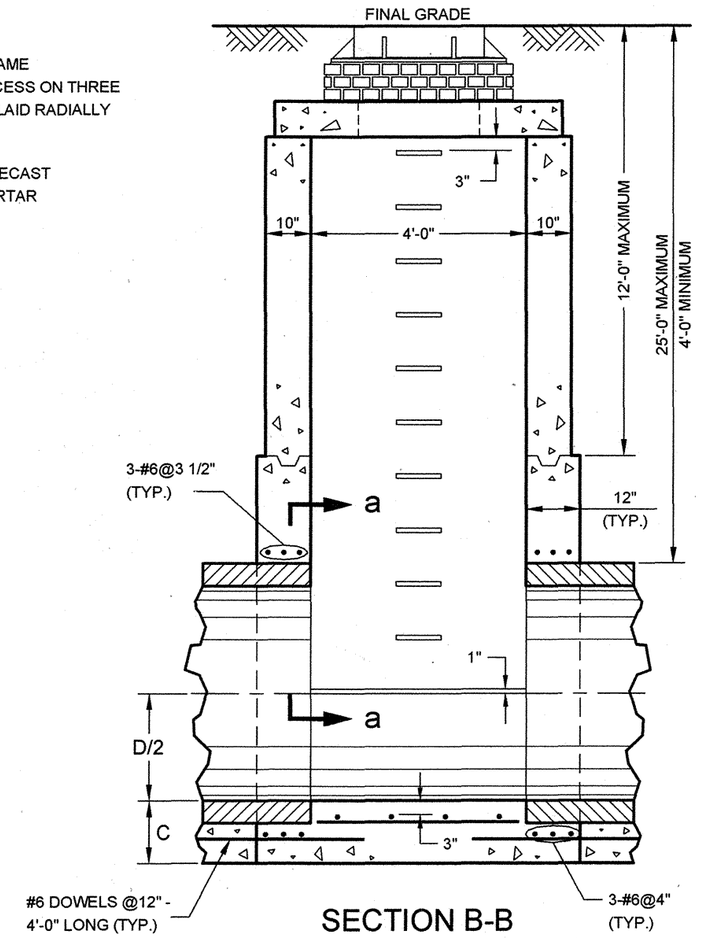

SECTION B-B

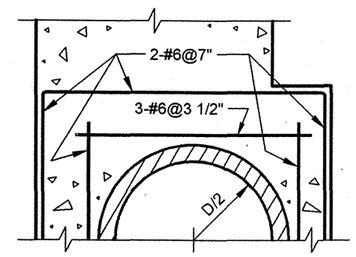

SECTION a-a

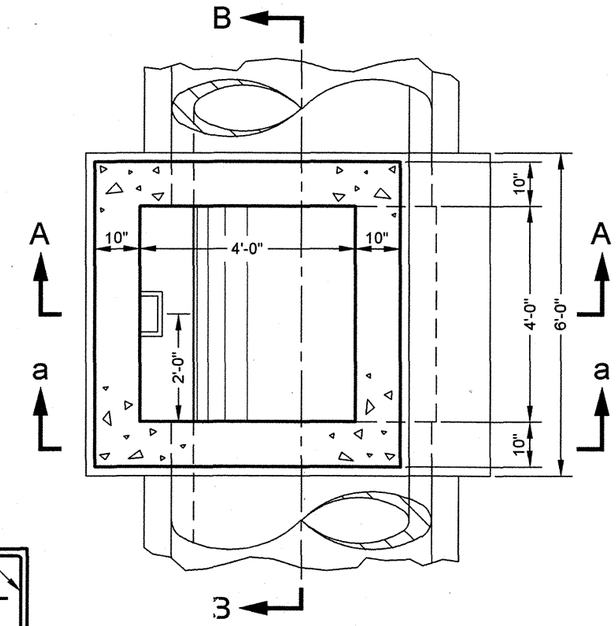

SECTION C-C

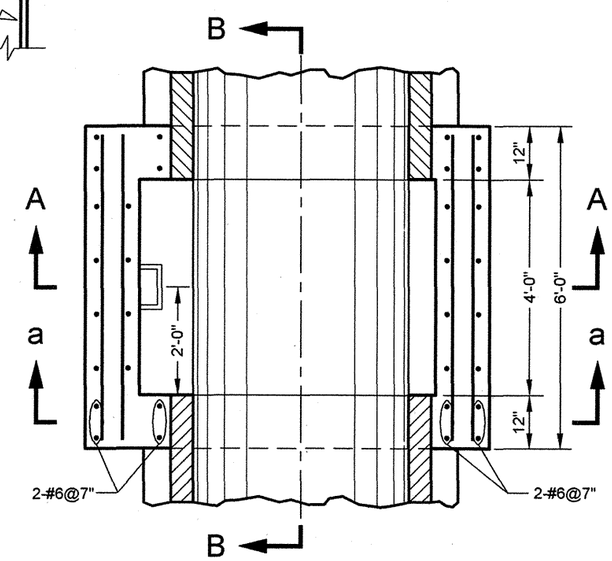

SECTION D-D

NOTES:

(1) WHEN LEGAL GRADE IS BELOW FINAL GRADE SEE SEWER STANDARD NO. 38.

(2) KEYED CONSTRUCTION JOINTS ARE REQUIRED BETWEEN ANY SUCCESSIVE POURS.

(3) CONCRETE IS TO BE CLASS 40. REBARS-GRADE 60.

(4) STEEL REINFORCEMENT IS #6@12" UNLESS OTHERWISE SPECIFIED COVER FOR ALL REINFORCEMENT IS 2" CLEARANCE UNLESS OTHERWISE SPECIFIED.

D	t	A	B	C	E	F	N
36"	4"	6'-6"	5'-10"	12"	10"	0'-6"	1
42"	4 1/2"	7'-0"	6'-5"	12 1/2"	10 1/2"	1'-0"	3
48"	5"	7'-6"	7'-1"	14"	11"	1'-6"	4
54"	5 1/2"	8'-0"	7'-9"	15 1/2"	11 1/2"	2'-0"	5
60"	6"	8'-6"	8'-5"	17"	12"	2'-6"	6

Gegi W. Carver P.E.
ASSISTANT COMMISSIONER, DESIGN
DEPARTMENT OF DESIGN AND CONSTRUCTION

7/9/07
DATE

Magdi Fana P.E.
DEPUTY DIRECTOR, ENGINEERING DEPARTMENT
OF ENVIRONMENTAL PROTECTION

8/10/07
DATE

REVISED JUNE 2004: C.A. NEVERSON

SE16

CITY OF NEW YORK
DEPARTMENT OF ENVIRONMENTAL PROTECTION

SE17

STANDARD FOR MANHOLE ON 36" DIA. TO 60" DIA. PIPE SEWERS ON PILES

TYPE C-1 (12' MAX. COVER) AND TYPE C-2 (25' MAX. COVER)

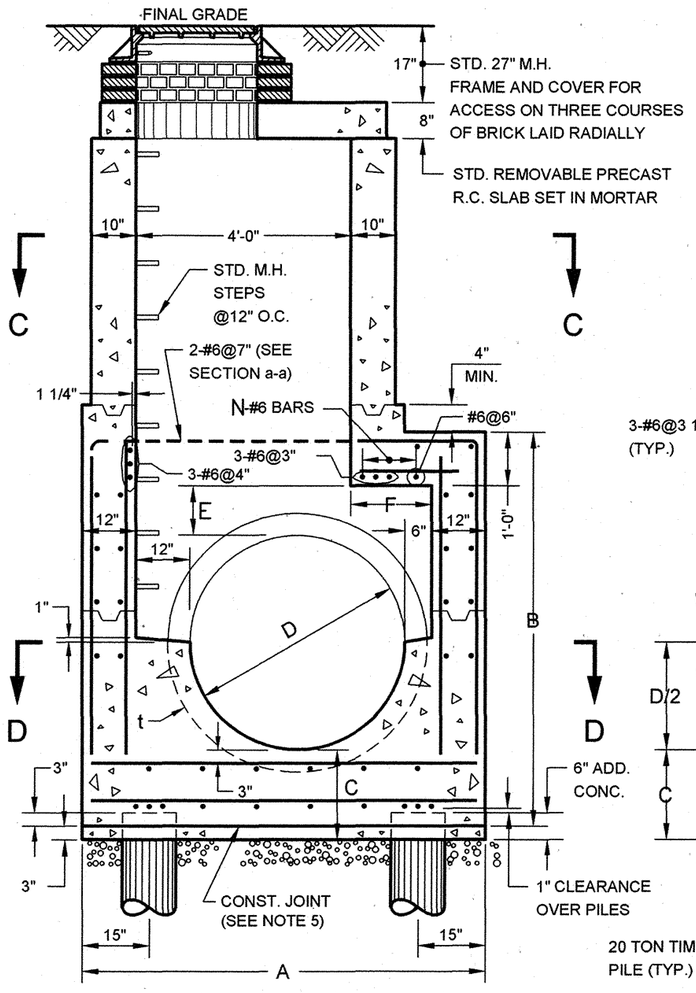

SECTION A-A

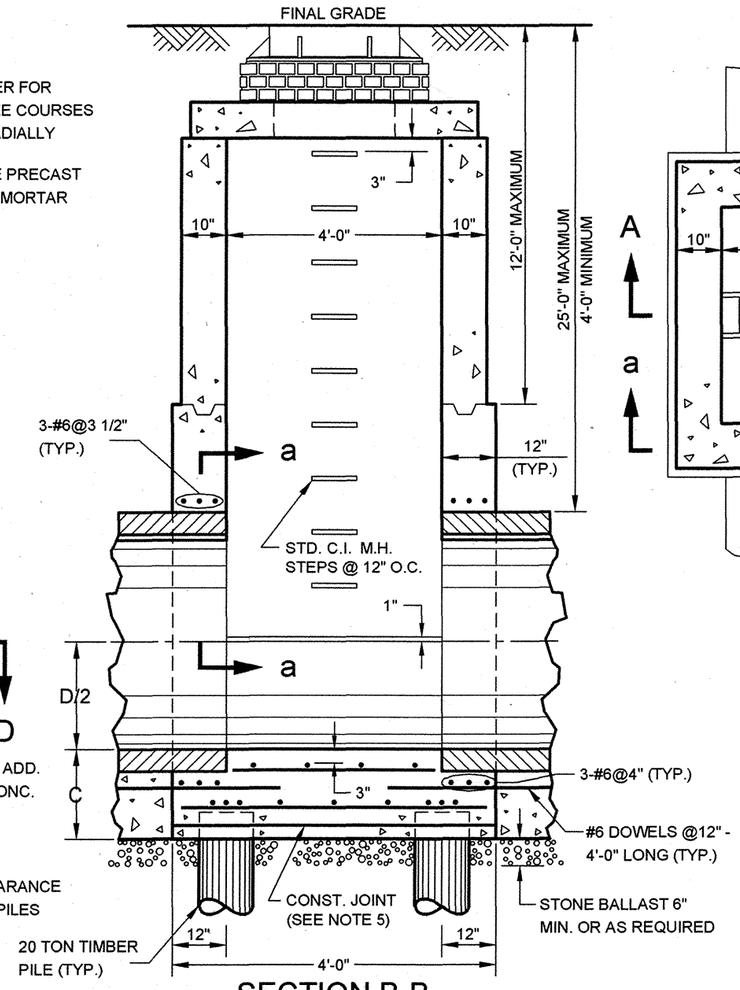

SECTION B-B

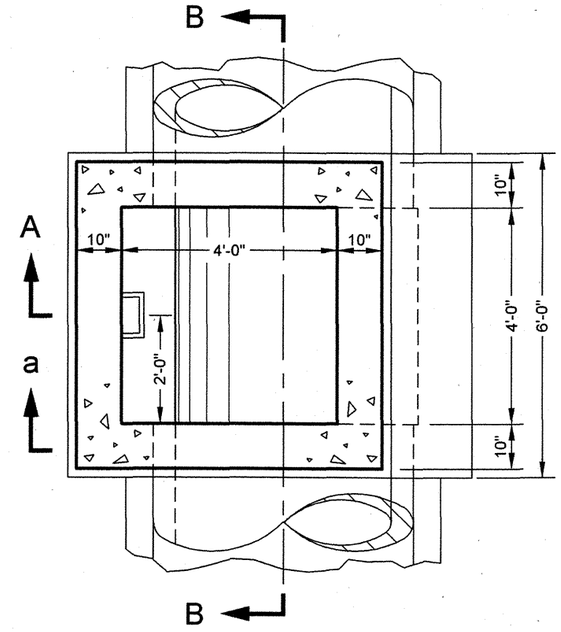

SECTION C-C

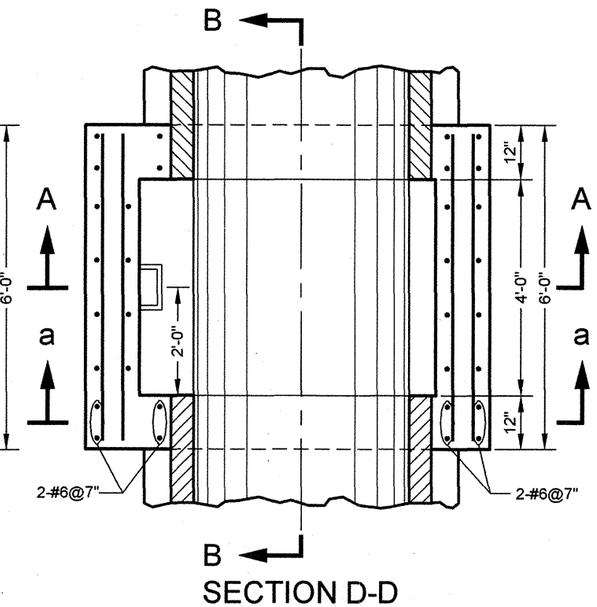

SECTION D-D

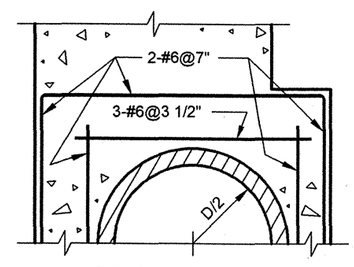

SECTION a-a

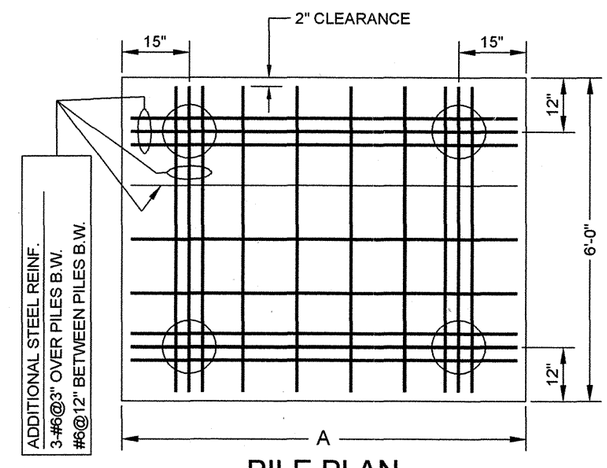

PILE PLAN

NOTES:

(1) WHEN LEGAL GRADE IS BELOW FINAL GRADE SEE SEWER STANDARD NO. 38.

(2) KEYED CONSTRUCTION JOINTS ARE REQUIRED BETWEEN ANY SUCCESSIVE POURS.

(3) CONCRETE IS TO BE CLASS 40. REBARS-GRADE 60.

(4) STEEL REINFORCEMENT IS #6@12" UNLESS OTHERWISE SPECIFIED. COVER FOR ALL REINFORCEMENT IS 2" CLEARANCE UNLESS OTHERWISE SPECIFIED.

(5) CONSTRUCTION JOINT TO BE UTILIZED WHENEVER GROUND CONDITIONS PREVENT SUPPORT OF PIPE.

D	t	A	B	C	E	F	N
36"	4"	6'-6"	6'-0"	14"	10"	0'-6"	1
42"	4 1/2"	7'-0"	6'-8"	15 1/2"	10 1/2"	1'-0"	3
48"	5"	7'-6"	7'-4"	17"	11"	1'-6"	4
54"	5 1/2"	8'-0"	8'-0"	18 1/2"	11 1/2"	2'-0"	5
60"	6"	8'-6"	8'-8"	20"	12"	2'-6"	6

Gege W. Carver P.E. 7/9/07
ASSISTANT COMMISSIONER, DESIGN
DEPARTMENT OF DESIGN AND CONSTRUCTION
DATE

Maedi Fona P.E. 8/10/07
DIRECTOR OF ENGINEERING
DEPARTMENT OF ENVIRONMENTAL PROTECTION
DATE

REVISED JUNE 2004: C.A. NEVERSON

CITY OF NEW YORK
DEPARTMENT OF ENVIRONMENTAL PROTECTION

SE18

STANDARD FOR MANHOLE ON 66" DIA. TO 96" DIA. PIPE SEWERS

TYPE D-1 (12' MAX. COVER) AND TYPE D-2 (25' MAX. COVER)

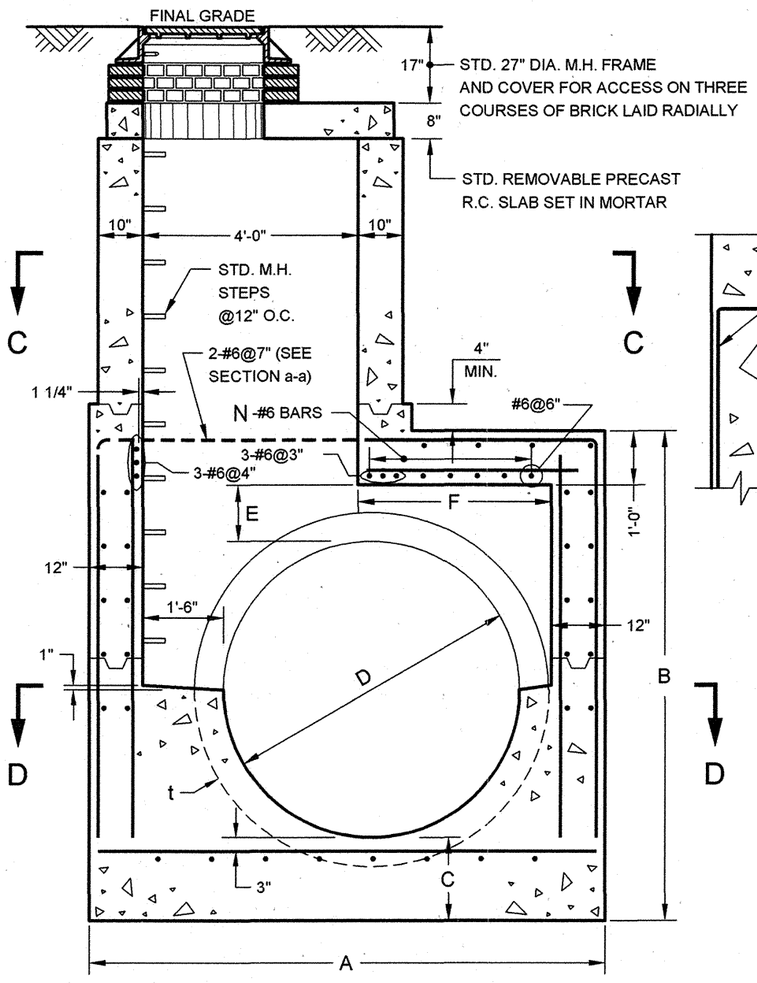

SECTION A-A

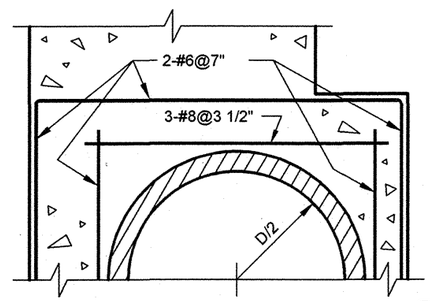

SECTION a-a

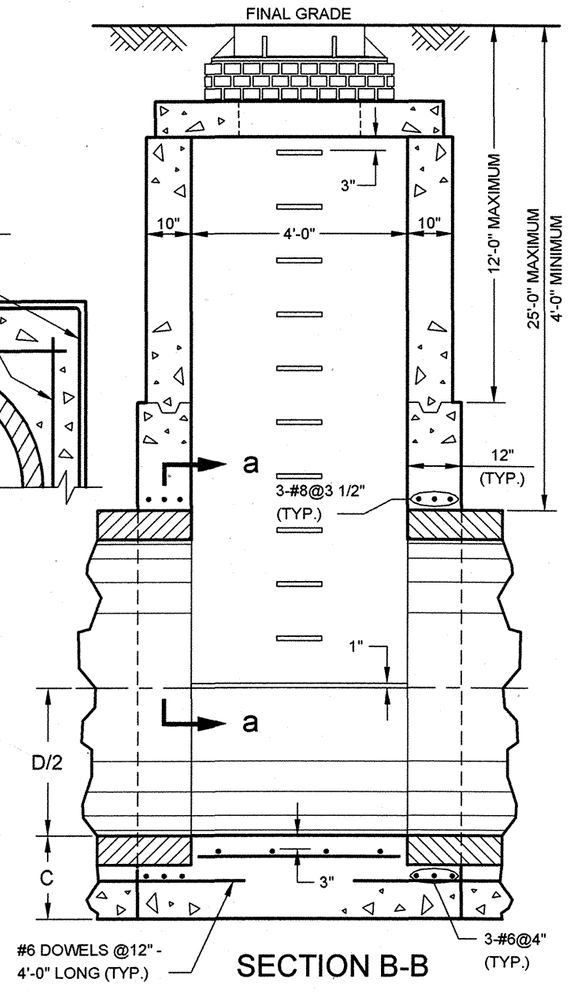

SECTION B-B

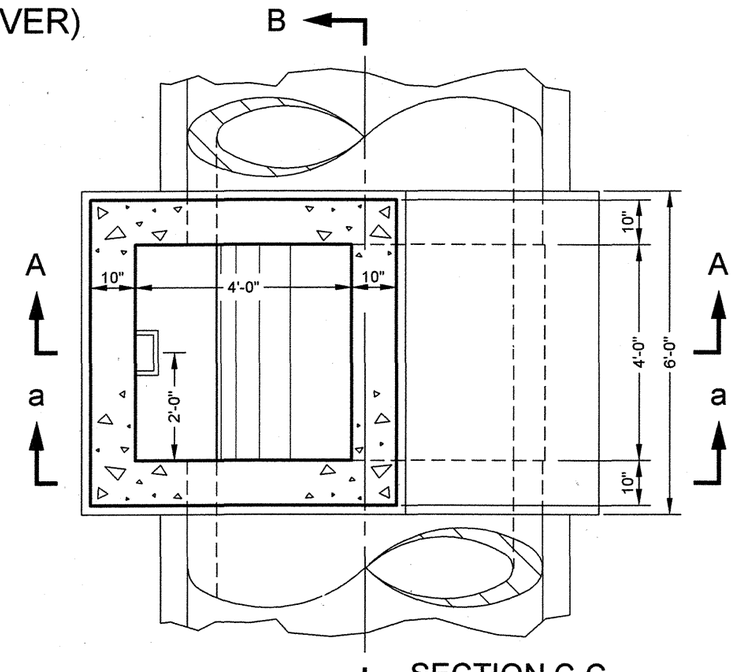

SECTION C-C

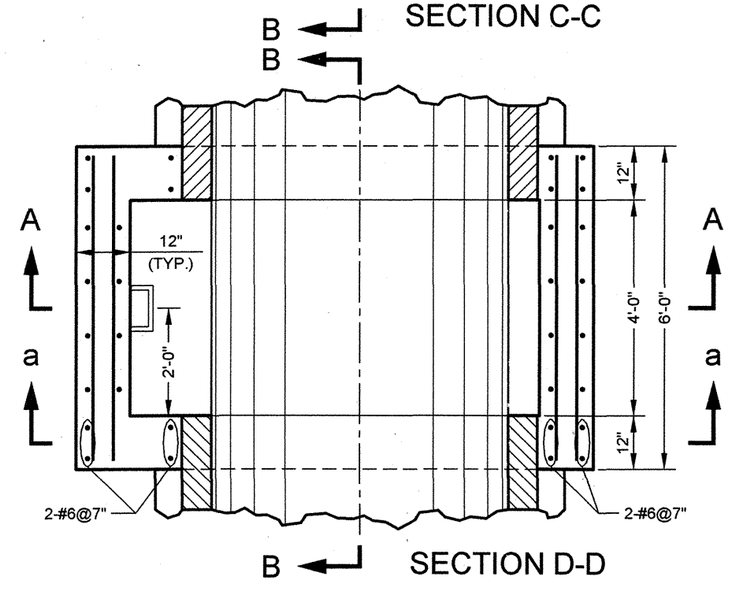

SECTION D-D

D	t	A	B	C	E	F	N
66"	6 1/2"	9'-7"	9'-1"	18 1/2"	12 1/2"	3'-7"	8
72"	7"	10'-1"	9'-9"	20"	13"	4'-1"	9
78"	7 1/2"	10'-8"	10'-5"	21 1/2"	13 1/2"	4'-8"	10
84"	8"	11'-2"	11'-1"	23"	14"	5'-2"	11
90"	8 1/2"	11'-9"	11'-10"	25 1/2"	14 1/2"	5'-9"	12
96"	9"	12'-3"	12'-5"	27"	15"	6'-3"	13

NOTES:

(1) WHEN LEGAL GRADE IS BELOW FINAL GRADE SEE SEWER STANDARD NO. 38.

(2) KEYED CONSTRUCTION JOINTS ARE REQUIRED BETWEEN ANY SUCCESSIVE POURS.

(3) CONCRETE IS TO BE CLASS 40. REBARS-GRADE 60.

(4) STEEL REINFORCEMENT IS #6@12" UNLESS OTHERWISE SPECIFIED. COVER FOR ALL REINFORCEMENT IS 2" CLEARANCE UNLESS OTHERWISE SPECIFIED.

Gige W. Carr P.E. 7/9/07
ASSISTANT COMMISSIONER, DESIGN
DEPARTMENT OF DESIGN AND CONSTRUCTION
DATE

Maedi Farah P.E. 8/10/07
DIRECTOR OF ENGINEERING
DEPARTMENT OF ENVIRONMENTAL PROTECTION
DATE

REVISED JULY 2000: C.A. NEVERSON

CITY OF NEW YORK
DEPARTMENT OF ENVIRONMENTAL PROTECTION

SE19

STANDARD FOR MANHOLE ON 66" DIA. TO 99" DIA. PIPE SEWERS ON PILES

TYPE D-1 (12' MAX. COVER) AND TYPE D-2 (25' MAX. COVER)

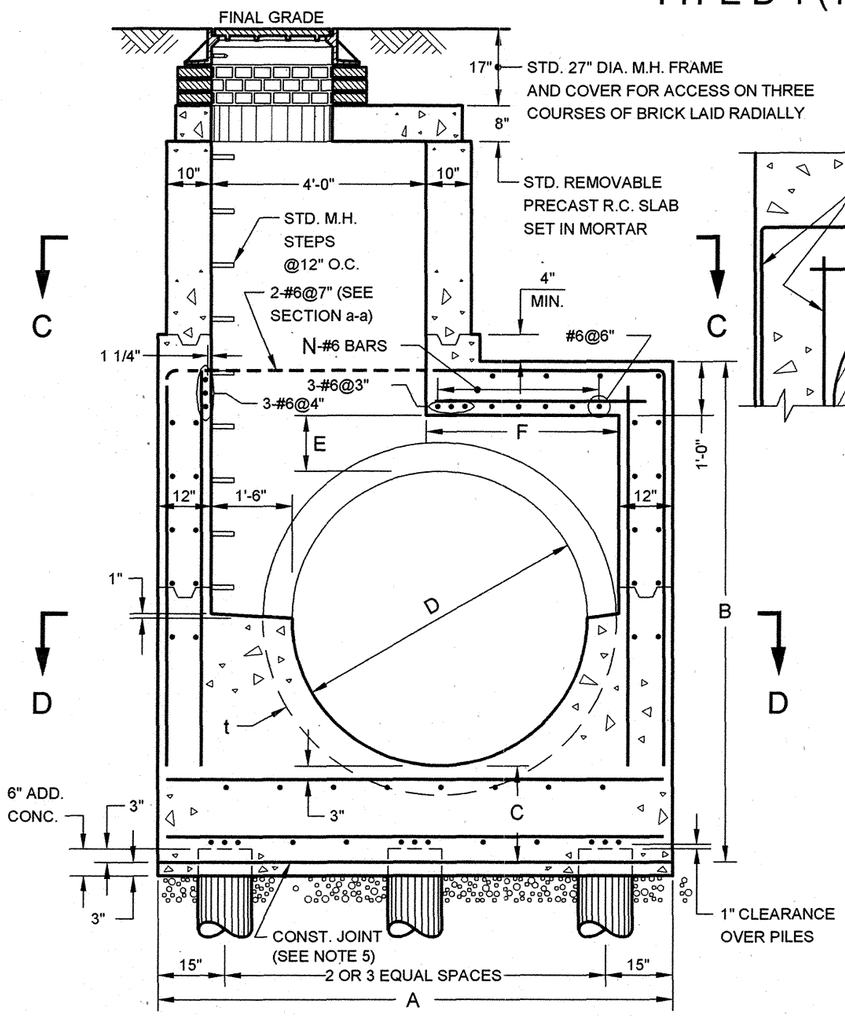

SECTION A-A

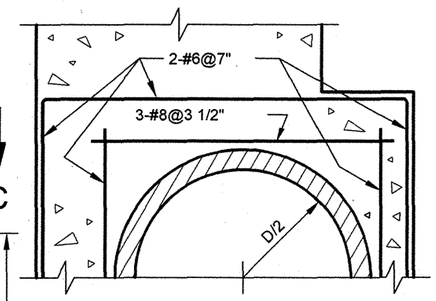

SECTION a-a

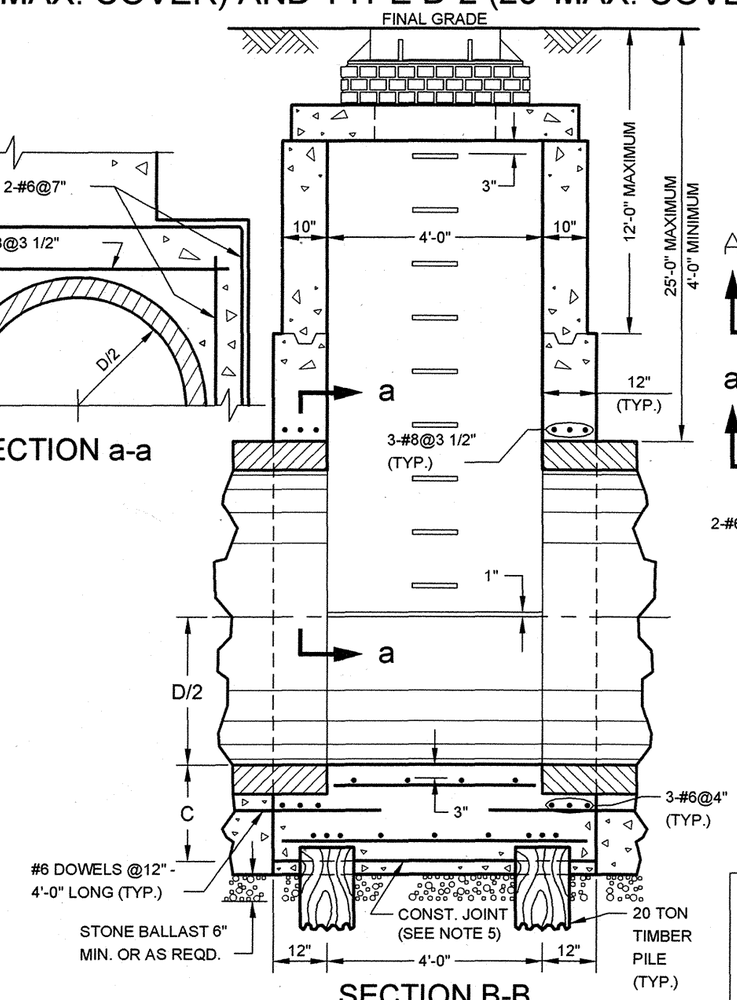

SECTION B-B

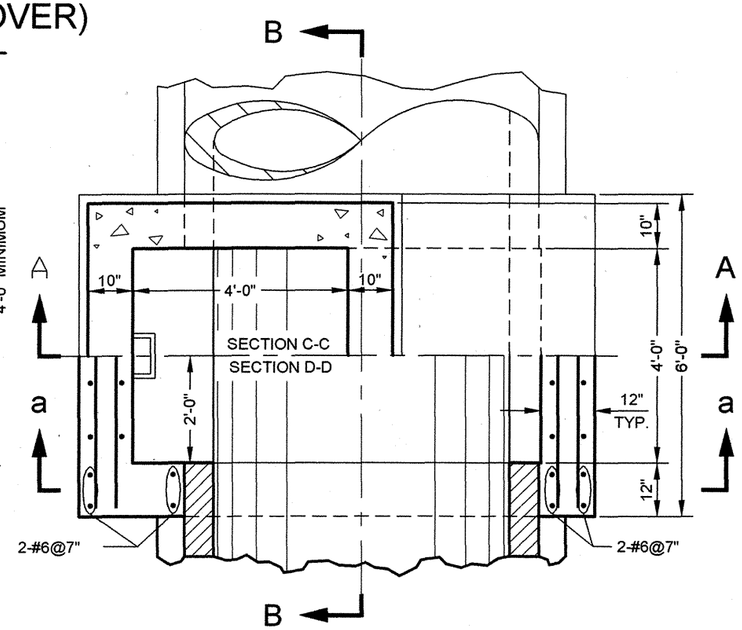

SECTION C-C/SECTION D-D

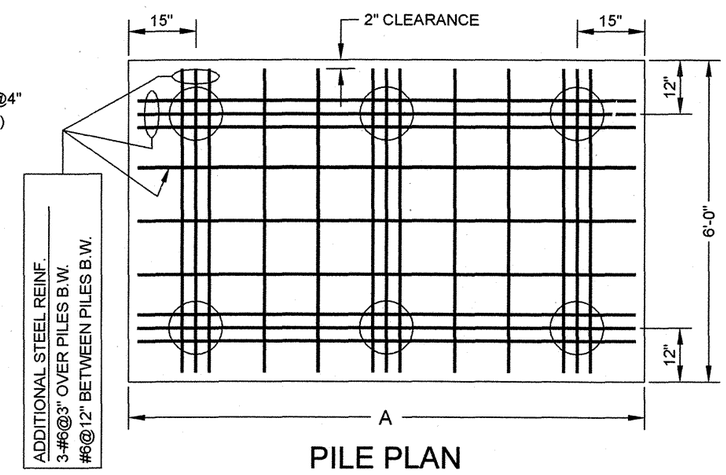

PILE PLAN

NOTES:

(1) WHEN LEGAL GRADE IS BELOW FINAL GRADE SEE SEWER STANDARD NO. 38.

(2) KEYED CONSTRUCTION JOINTS ARE REQUIRED BETWEEN ANY SUCCESSIVE POURS.

(3) CONCRETE IS TO BE CLASS 40. REBARS-GRADE 60.

(4) STEEL REINFORCEMENT IS #6@12" UNLESS OTHERWISE SPECIFIED. COVER FOR ALL REINFORCEMENT IS 2" CLEARANCE UNLESS OTHERWISE SPECIFIED.

(5) CONSTRUCTION JOINT TO BE UTILIZED WHENEVER GROUND CONDITIONS PREVENT SUPPORT OF PIPE.

D	t	A	B	C	E	F	N	PILES/ BENT
66"	6 1/2"	9'-7"	9'-4"	21 1/2"	12 1/2"	3'-7"	8	3
72"	7"	10'-1"	10'-0"	23"	13"	4'-1"	9	3
78"	7 1/2"	10'-8"	10'-8"	24 1/2"	13 1/2"	4'-8"	10	3*
84"	8"	11'-2"	11'-4"	26"	14"	5'-2"	11	3*
90"	8 1/2"	11'-9"	12'-1"	28 1/2"	14 1/2"	5'-9"	12	3*
96"	9"	12'-3"	12'-8"	30"	15"	6'-3"	13	3*

* USE FOUR PILES PER BENT FOR COVER OVER 15'.

Peter W. Carson P.E.
ASSISTANT COMMISSIONER, DESIGN
DEPARTMENT OF DESIGN AND CONSTRUCTION

7/9/07
DATE

Magdi Farag P.E.
DIRECTOR OF ENGINEERING
DEPARTMENT OF ENVIRONMENTAL PROTECTION

8/10/07
DATE

REVISED JULY 2004: C.A. NEVERSON

CITY OF NEW YORK
DEPARTMENT OF ENVIRONMENTAL PROTECTION

SE20

STANDARD FOR MANHOLE ON 23"W x 14"H TO 60"W x 38"H HORIZONTAL ELLIPTICAL PIPE SEWERS

TYPE E-1 (12' MAX. COVER)

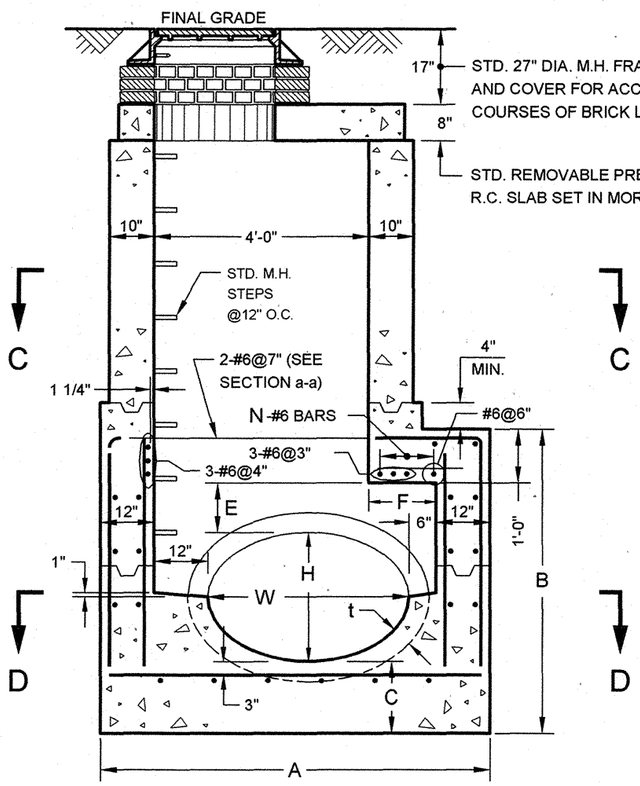

SECTION A-A

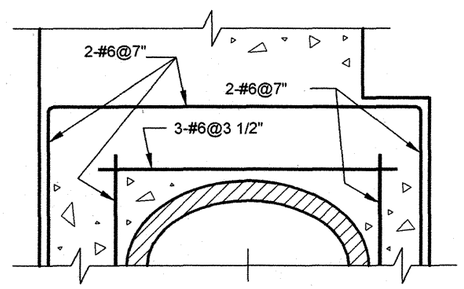

SECTION a-a

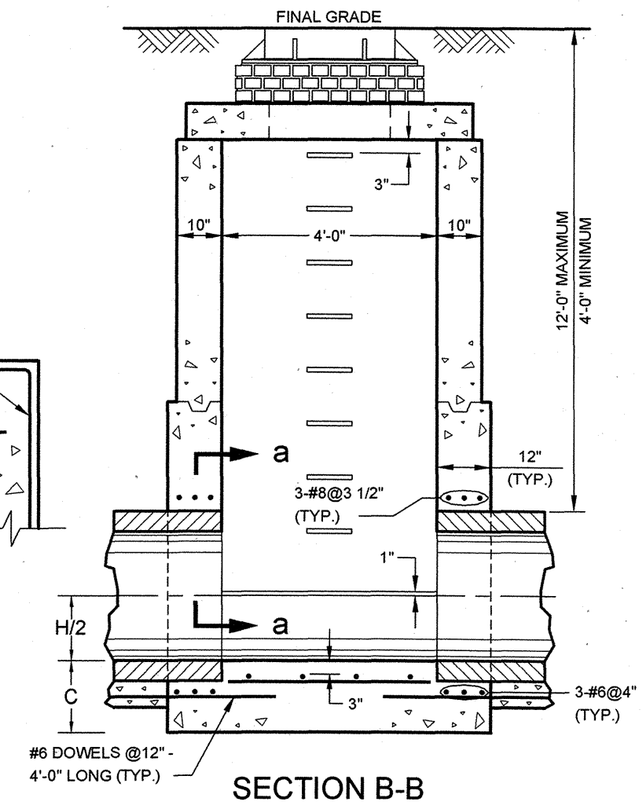

SECTION B-B

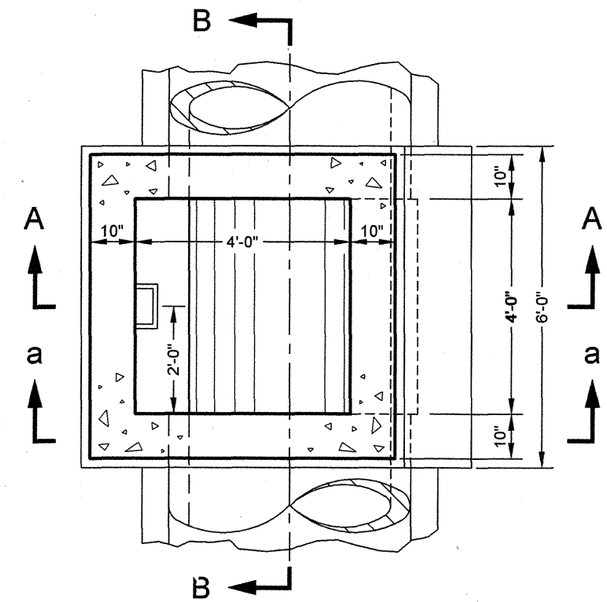

SECTION C-C

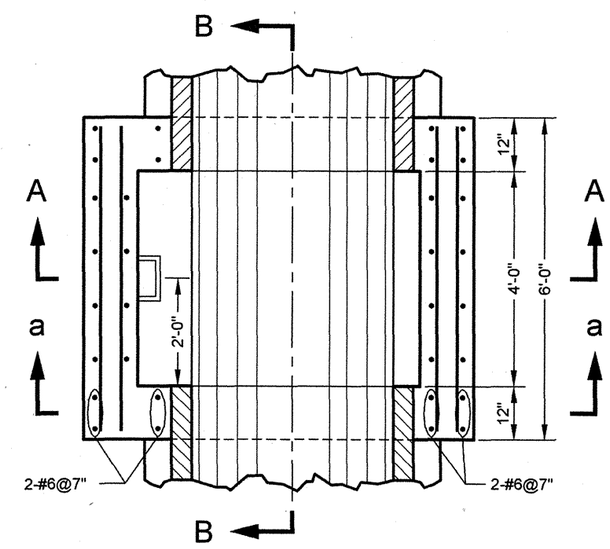

SECTION D-D

NOTES:

(1) WHEN LEGAL GRADE IS BELOW FINAL GRADE SEE SEWER STANDARD NO. 38.

(2) KEYED CONSTRUCTION JOINTS ARE REQUIRED BETWEEN ANY SUCCESSIVE POURS.

(3) CONCRETE IS TO BE CLASS 40. REBARS-GRADE 60.

(4) STEEL REINFORCEMENT IS #6@12" UNLESS OTHERWISE SPECIFIED. COVER FOR ALL REINFORCEMENT IS 2" CLEARANCE UNLESS OTHERWISE SPECIFIED.

W	H	t	A	B	C	E	F	N
23"	14"	2 3/4"	6'-0"	4'-1"	14"	9"	-	-
30"	19"	3 1/4"	6'-0"	4'-7"	14"	10"	-	-
38"	24"	3 3/4"	6'-8"	5'-1"	15"	10"	0'-8"	2
45"	29"	4 1/2"	7'-3"	5'-8"	16"	11"	1'-3"	4
53"	34"	5"	7'-11"	6'-1"	16"	11"	1'-11"	5
60"	38"	5 1/2"	8'-6"	6'-7"	17"	12"	2'-6"	6

Gegi W. Caron P.E.
ASSISTANT COMMISSIONER, DESIGN
DEPARTMENT OF DESIGN AND CONSTRUCTION

7/9/07
DATE

Magdi Farag P.E.
DIRECTOR OF ENGINEERING
DEPARTMENT OF ENVIRONMENTAL PROTECTION

8/10/07
DATE

REVISED JULY 2004: NEVERSON

SE21

CITY OF NEW YORK
DEPARTMENT OF ENVIRONMENTAL PROTECTION

SE21

STANDARD FOR MANHOLE ON 23"W x 14"H TO 60"W x 38"H HORIZONTAL ELLIPTICAL PIPE SEWERS ON PILES

TYPE E-1 (12' MAX. COVER)

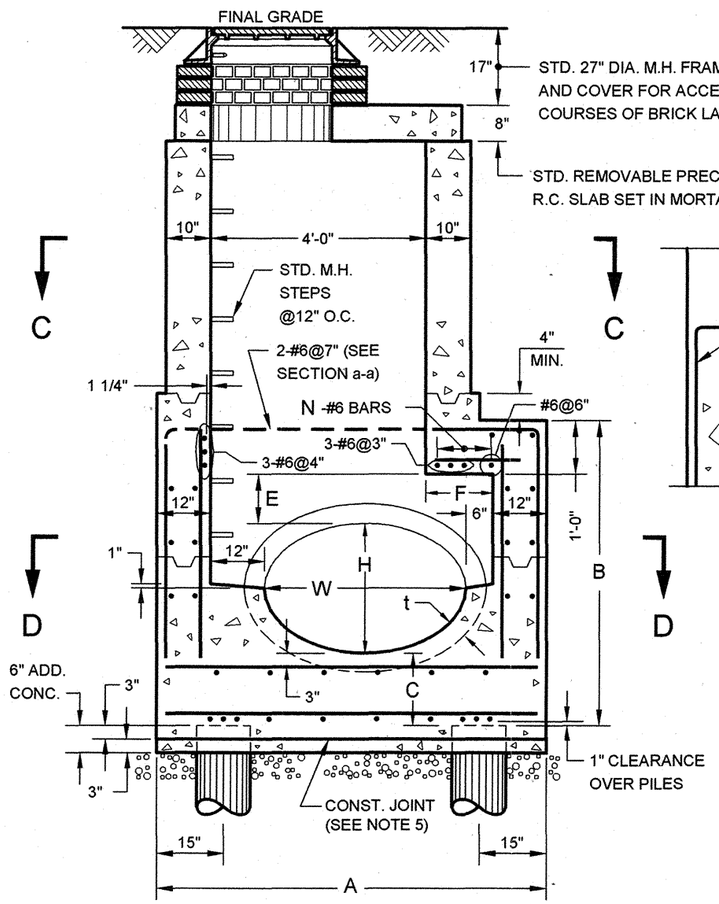

SECTION A-A

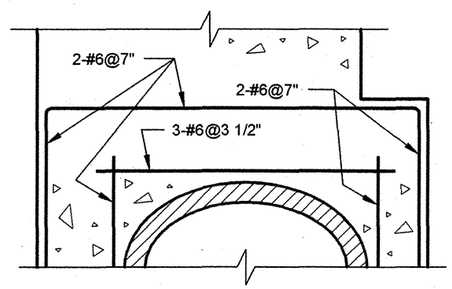

SECTION a-a

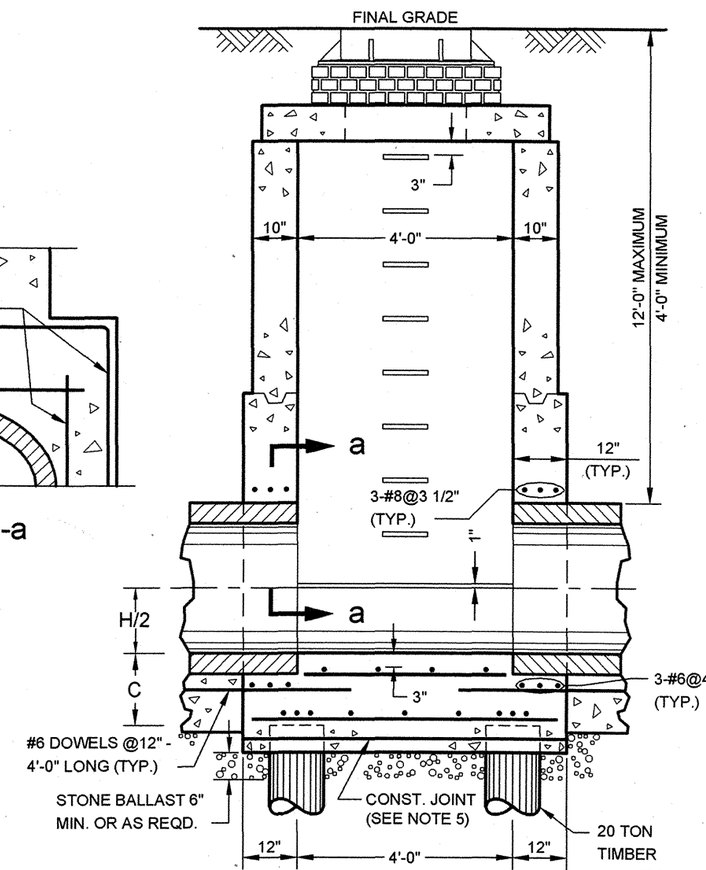

SECTION B-B

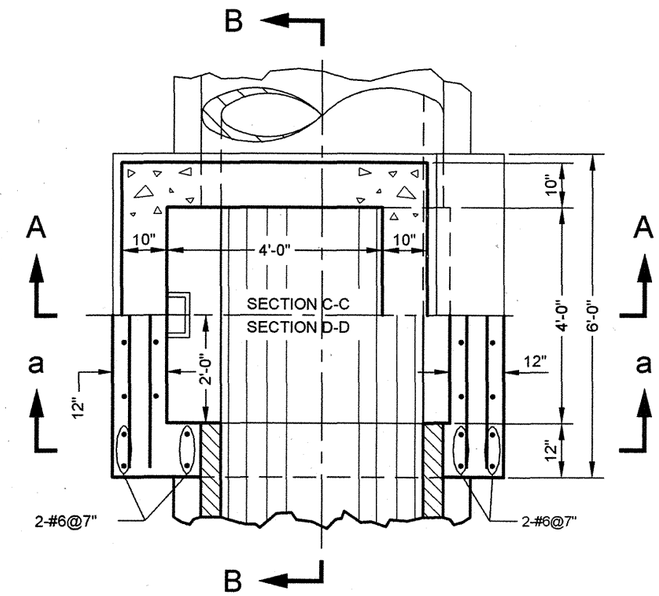

SECTION C-C/SECTION D-D

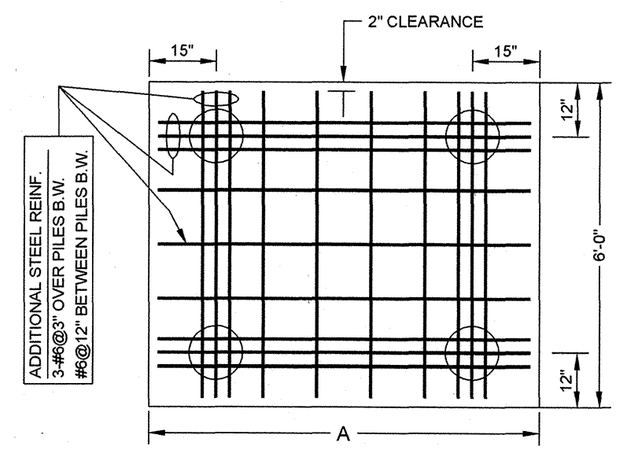

PILE PLAN

NOTES:

(1) WHEN LEGAL GRADE IS BELOW FINAL GRADE SEE SEWER STANDARD NO. 38.

(2) KEYED CONSTRUCTION JOINTS ARE REQUIRED BETWEEN ANY SUCCESSIVE POURS.

(3) CONCRETE IS TO BE CLASS 40. REBARS-GRADE 60.

(4) STEEL REINFORCEMENT IS #6@12" UNLESS OTHERWISE SPECIFIED. COVER FOR ALL REINFORCEMENT IS 2" CLEARANCE UNLESS OTHERWISE SPECIFIED.

(5) CONSTRUCTION JOINT TO BE UTILIZED WHENEVER GROUND CONDITIONS PREVENT SUPPORT OF PIPE.

W	H	t	A	B	C	E	F	N
23"	14"	2 3/4"	6'-0"	4'-1"	14"	9"	-	-
30"	19"	3 1/4"	6'-0"	4'-7"	14"	10"	-	-
38"	24"	3 3/4"	6'-8"	5'-1"	15"	10"	0'-8"	2
45"	29"	4 1/2"	7'-3"	5'-8"	16"	11"	1'-3"	4
53"	34"	5"	7'-11"	6'-1"	16"	11"	1'-11"	5
60"	38"	5 1/2"	8'-6"	6'-7"	17"	12"	2'-6"	6

George W. Carron P.E. 7/9/07

ASSISTANT COMMISSIONER, DESIGN
DEPARTMENT OF DESIGN AND CONSTRUCTION

DATE

Medi Fara P.E. 8/10/07

DIRECTOR OF ENGINEERING
DEPARTMENT OF ENVIRONMENTAL PROTECTION

DATE

REVISED JULY 2004: C.A. NEVERSON

CITY OF NEW YORK
DEPARTMENT OF ENVIRONMENTAL PROTECTION

SE22

STANDARD FOR MANHOLE ON 68"W x 43"H TO 121"W x 77"H HORIZONTAL ELLIPTICAL PIPE SEWERS

TYPE E-2 (12" MAX. COVER)

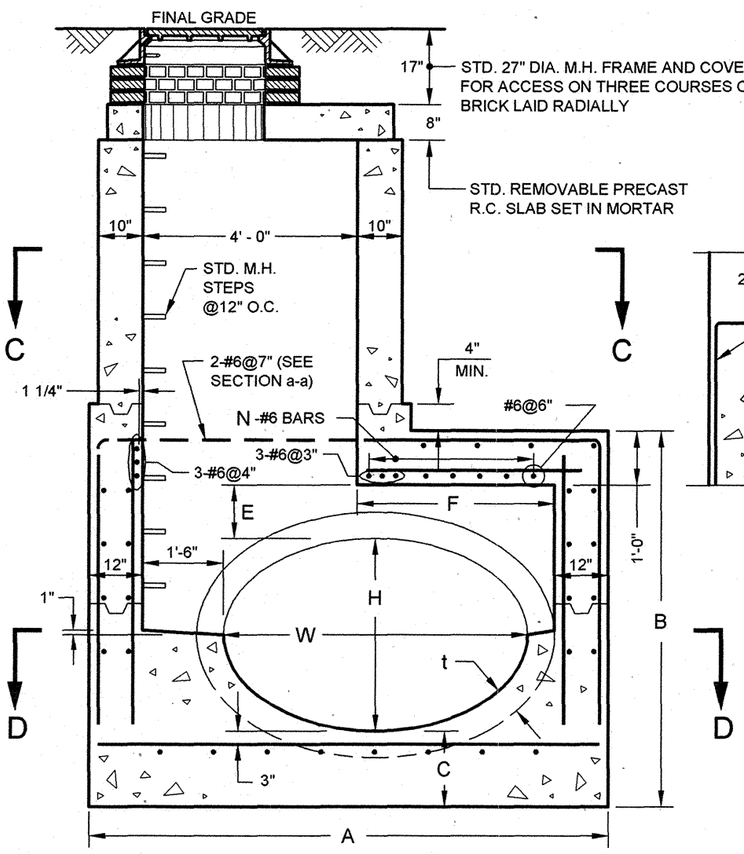

SECTION A-A

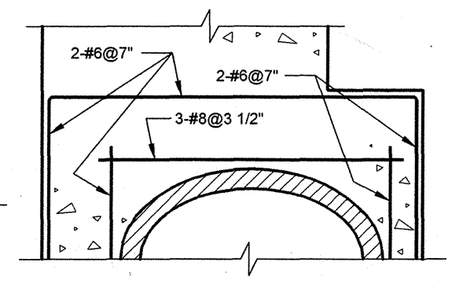

SECTION a-a

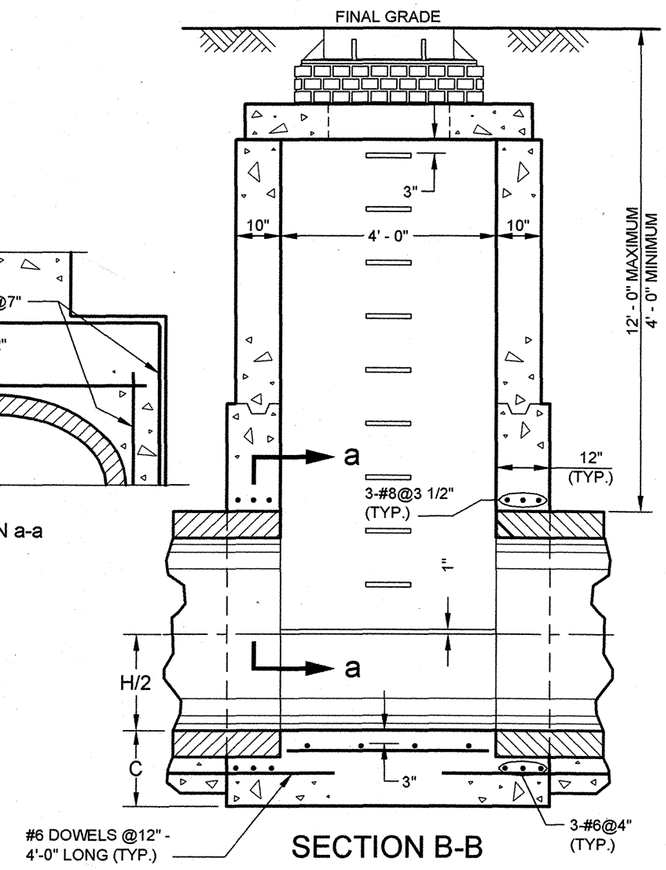

SECTION B-B

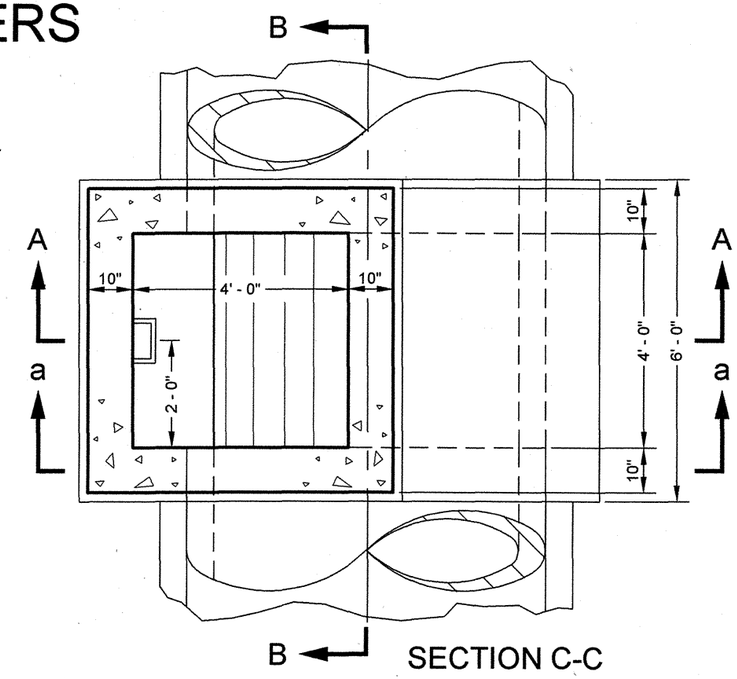

SECTION C-C

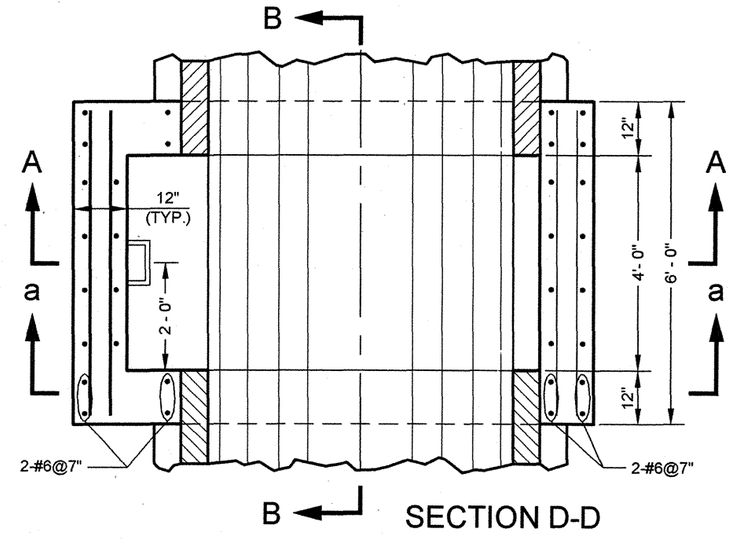

SECTION D-D

W	H	t	A	B	C	E	F	N
68"	43"	6"	9'-8"	7'-0"	17"	12"	3'-8"	8
76"	48"	6 1/2"	10'-5"	7'-7"	18"	13"	4'-5"	9
83"	53"	7"	11'-0"	8'-0"	18"	13"	5'-0"	11
91"	58"	7 1/2"	11'-9"	8'-7"	19"	14"	5'-9"	12
98"	63"	8"	12'-4"	9'-0"	19"	14"	6'-4"	13
106"	68"	8 1/2"	13'-1"	9'-8"	21"	15"	7'-1"	15
113"	72"	9"	13'-8"	10'-1"	22"	15"	7'-8"	16
121"	77"	9 1/2"	14'-5"	10'-9"	24"	16"	8'-5"	17

NOTES:

(1) WHEN LEGAL GRADE IS BELOW FINAL GRADE SEE SEWER STANDARD NO. 38.

(2) KEYED CONSTRUCTION JOINTS ARE REQUIRED BETWEEN ANY SUCCESSIVE POURS.

(3) CONCRETE IS TO BE CLASS 40. REBARS-GRADE 60.

(4) STEEL REINFORCEMENT IS #6@12" UNLESS OTHERWISE SPECIFIED. COVER FOR ALL REINFORCEMENT IS 2" CLEARANCE UNLESS OTHERWISE SPECIFIED.

Gregg W. Carson P.E. — 7/9/07
ASSISTANT COMMISSIONER, DESIGN
DEPARTMENT OF DESIGN AND CONSTRUCTION
DATE

Vincenzo Tarantino P.E. — 8/10/07
DIRECTOR OF ENGINEERING
DEPARTMENT OF ENVIRONMENTAL PROTECTION
DATE

REVISED JULY 2004: C.A. NEVERSON

CITY OF NEW YORK
DEPARTMENT OF ENVIRONMENTAL PROTECTION

SE23

STANDARD FOR MANHOLE ON 68"W x 43"H TO 121"W x 77"H HORIZONTAL ELLIPTICAL PIPE SEWERS ON PILES

TYPE E-2 (12" MAX. COVER)

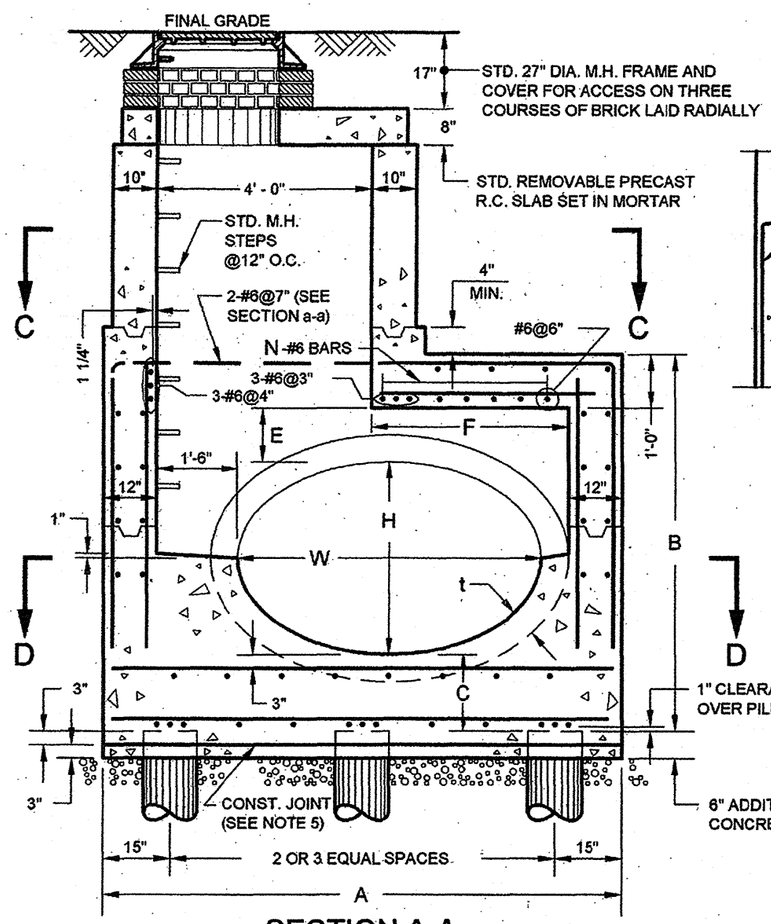

SECTION A-A

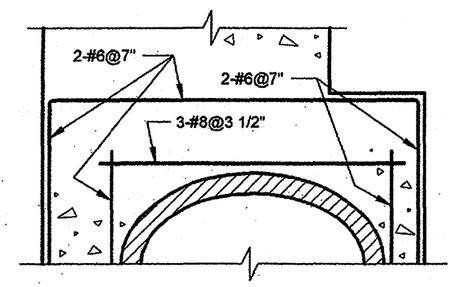

SECTION a-a

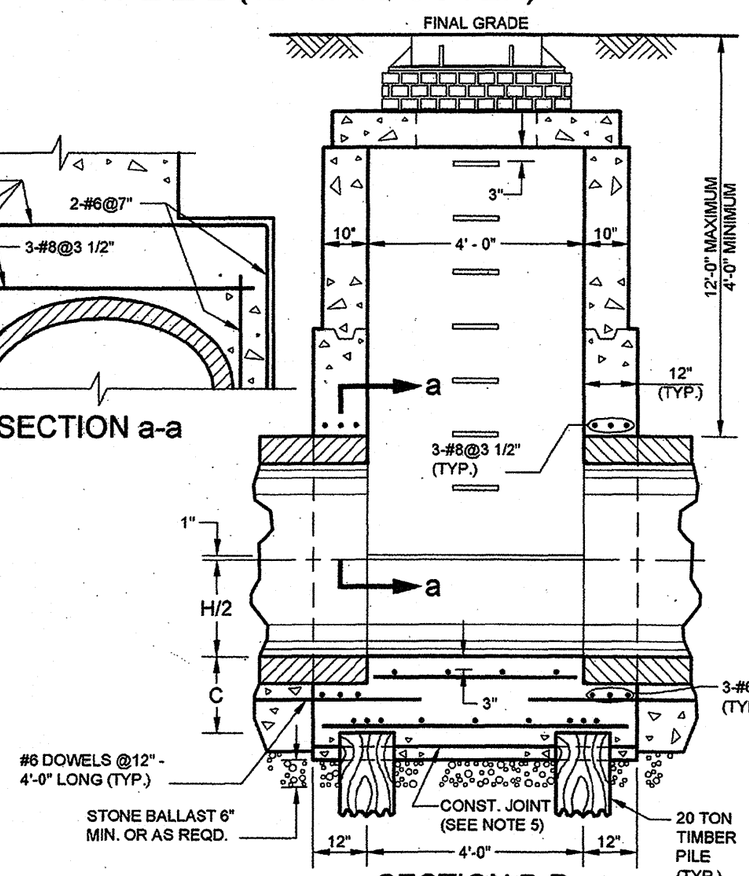

SECTION B-B

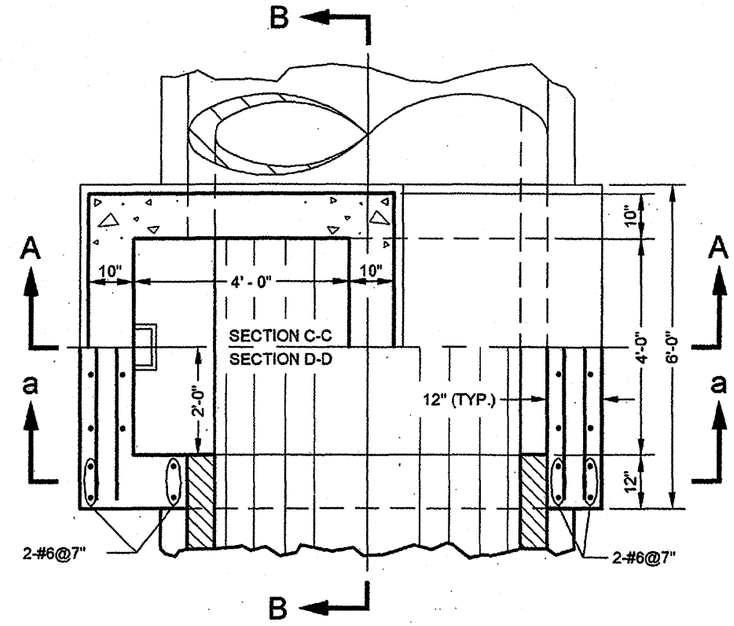

SECTION C-C/SECTION D-D

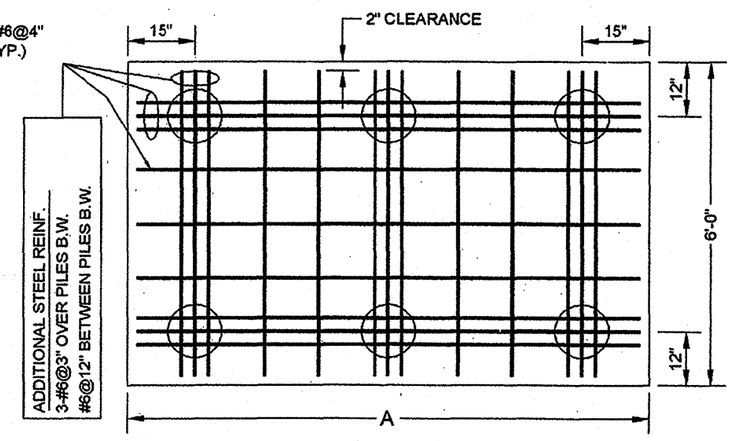

PILE PLAN

W	H	t	A	B	C	E	F	N	PILES/ BENT
68"	43"	6"	9'-8"	7'-7"	17"	12"	3'-8"	8	3
76"	48"	6 1/2"	10'-5"	7'-7"	18"	13"	4'-5"	9	3
83"	53"	7"	11'-0"	8'-0"	18"	13"	5'-0"	11	3
91"	58"	7 1/2"	11'-9"	8'-7"	19"	14"	5'-9"	12	3
98"	63"	8"	12'-4"	9'-0"	19"	14"	6'-4"	13	3
106"	68"	8 1/2"	13'-1"	9'-8"	21"	15"	7'-1"	15	3
113"	72"	9"	13'-8"	10'-1"	22"	15"	7'-8"	16	4
121"	77"	9 1/2"	14'-5"	10'-9"	24"	16"	8'-5"	17	4

NOTES:

(1) WHEN LEGAL GRADE IS BELOW FINAL GRADE SEE SEWER STANDARD NO. 38.
(2) KEYED CONSTRUCTION JOINTS ARE REQUIRED BETWEEN ANY SUCCESSIVE POURS.
(3) CONCRETE IS TO BE CLASS 40. REBARS-GRADE 60.
(4) STEEL REINFORCEMENT IS #6@12" UNLESS OTHERWISE SPECIFIED. COVER FOR ALL REINFORCEMENT IS 2" CLEARANCE UNLESS OTHERWISE SPECIFIED.
(5) CONSTRUCTION JOINT TO BE UTILIZED WHENEVER GROUND CONDITIONS PREVENT SUPPORT OF PIPE.

Gege W. Carron P.E. — 7/9/07
ASSISTANT COMMISSIONER, DESIGN
DEPARTMENT OF DESIGN AND CONSTRUCTION
DATE

Macdi Fonas P.E. — 8/10/07
DIRECTOR OF ENGINEERING
DEPARTMENT OF ENVIRONMENTAL PROTECTION
DATE

REVISED AUGUST 2004: C.A. NEVERSON

SE24

CITY OF NEW YORK
DEPARTMENT OF ENVIRONMENTAL PROTECTION

SE24

STANDARD FOR DROP PIPE MANHOLE (TYPE I) ON 10" DIA. TO 24" DIA. PIPE SEWERS

(25' MAX. COVER)

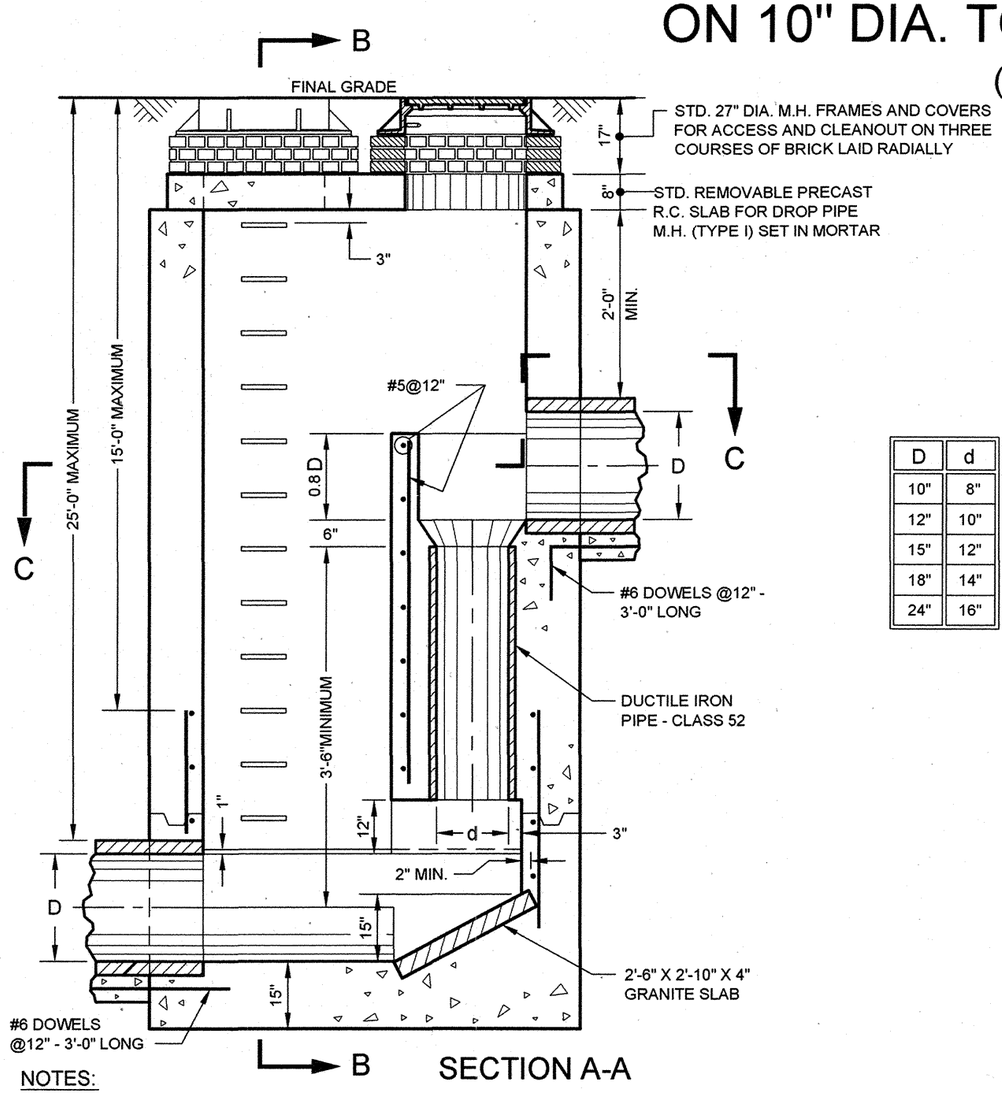

SECTION A-A

D	d
10"	8"
12"	10"
15"	12"
18"	14"
24"	16"

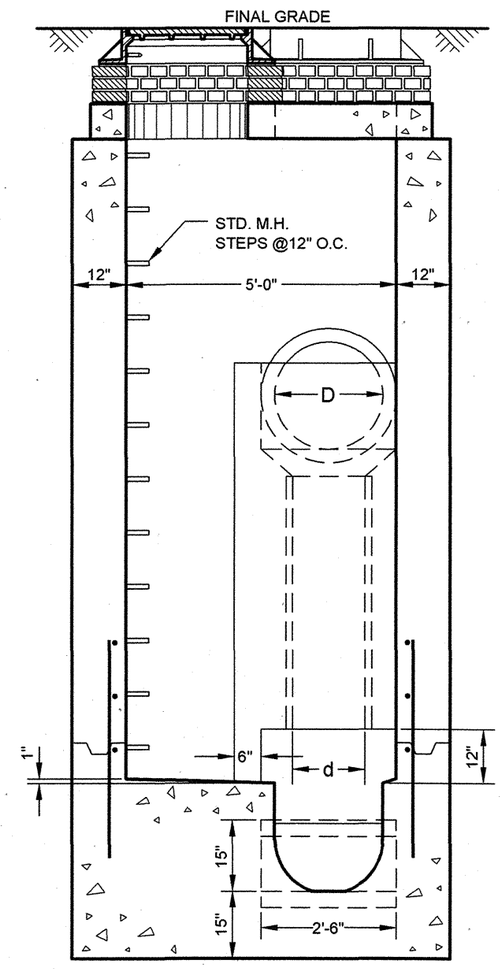

SECTION B-B

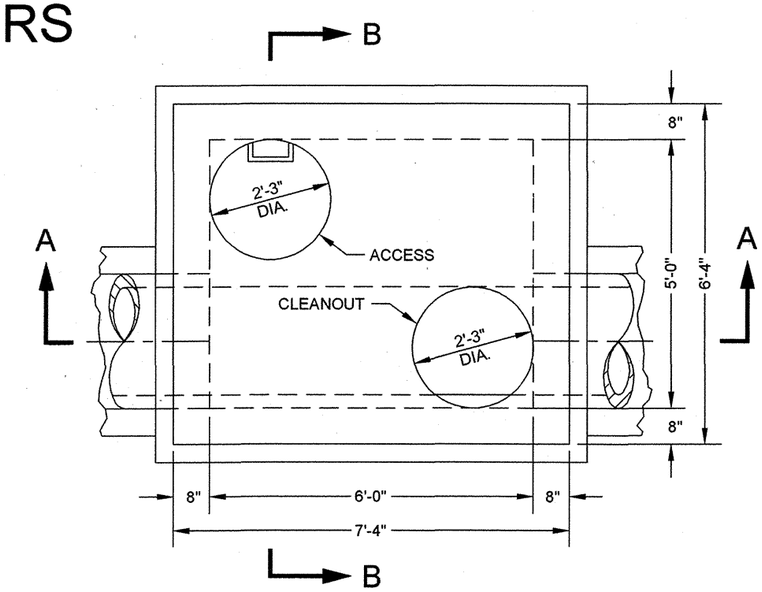

ROOF PLAN

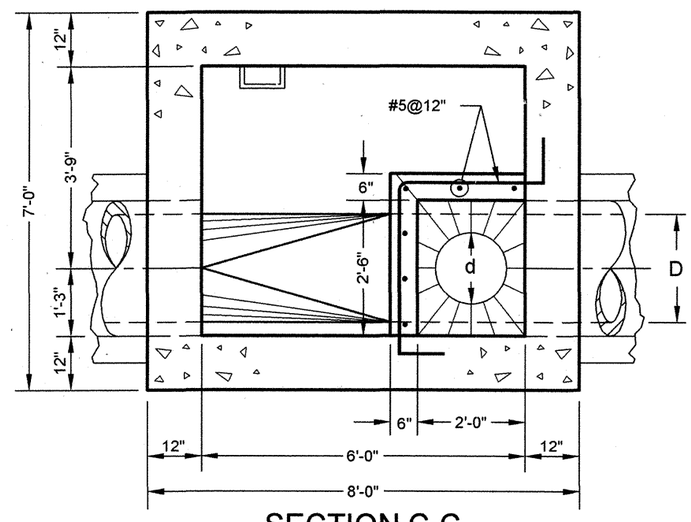

SECTION C-C

NOTES:

(1) WHEN LEGAL GRADE IS BELOW FINAL GRADE SEE SEWER STANDARD NO. 38.

(2) KEYED CONSTRUCTION JOINTS ARE REQUIRED BETWEEN ANY SUCCESSIVE POURS.

(3) CONCRETE IS TO BE CLASS 40. REBARS-GRADE 60.

(4) STEEL REINFORCEMENT IS #6@12" UNLESS OTHERWISE SPECIFIED. COVER FOR ALL REINFORCEMENT IS 2" CLEARANCE UNLESS OTHERWISE SPECIFIED.

Eric W. Caron P.E. 7/9/07

ASSISTANT COMMISSIONER, DESIGN
DEPARTMENT OF DESIGN AND CONSTRUCTION

DATE

Magdi Farag P.E. 8/10/07

DIRECTOR OF ENGINEERING
DEPARTMENT OF ENVIRONMENTAL PROTECTION

DATE

REVISED SEPTEMBER 2004: C.A. NEVERSON

SE25

CITY OF NEW YORK
DEPARTMENT OF ENVIRONMENTAL PROTECTION

SE25

STANDARD FOR DROP PIPE MANHOLE (TYPE I) ON 10" DIA. TO 24" DIA. PIPE SEWERS ON PILES

(25' MAX. COVER)

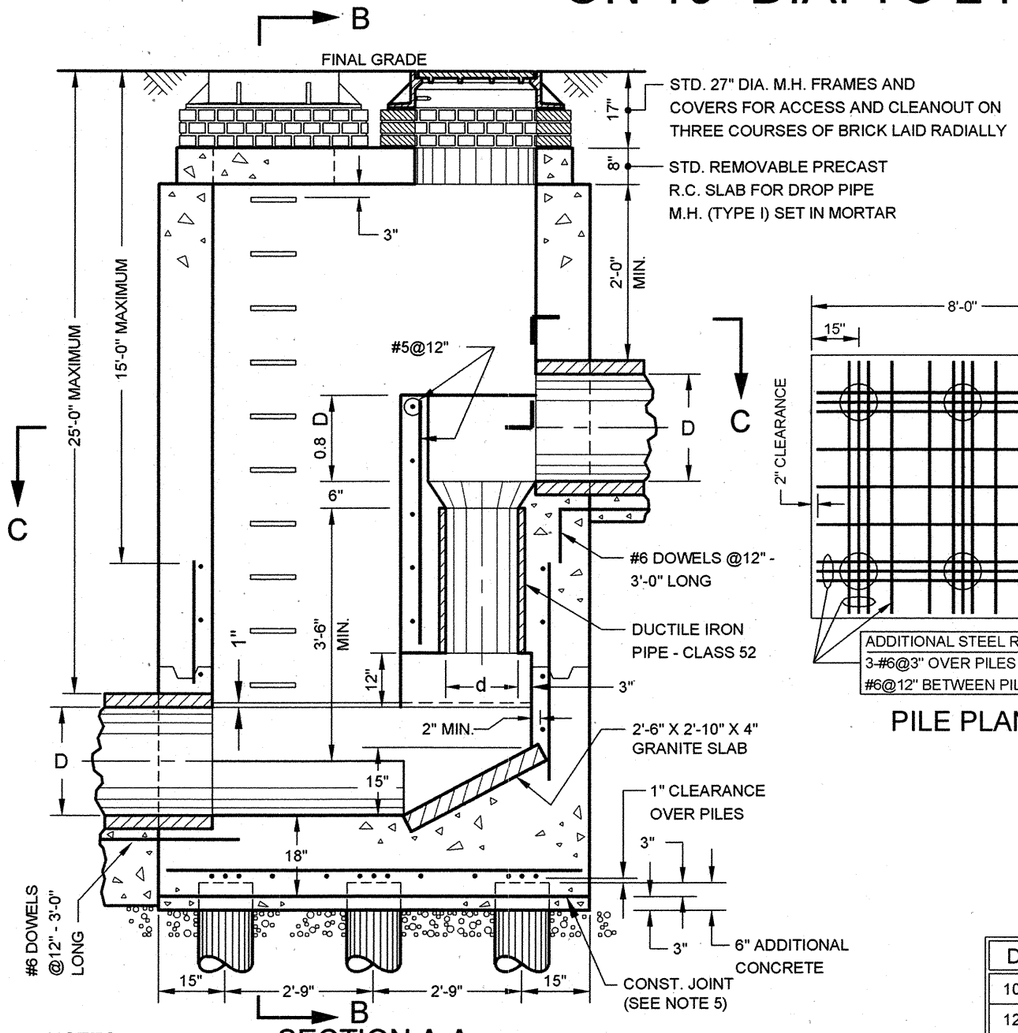

SECTION A-A

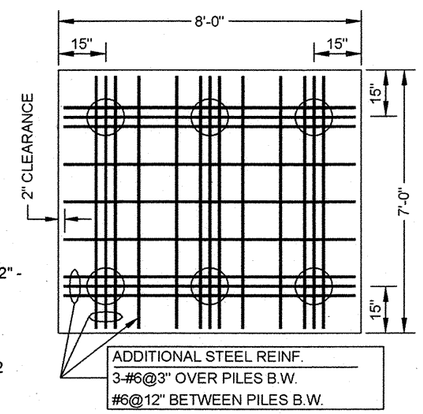

PILE PLAN

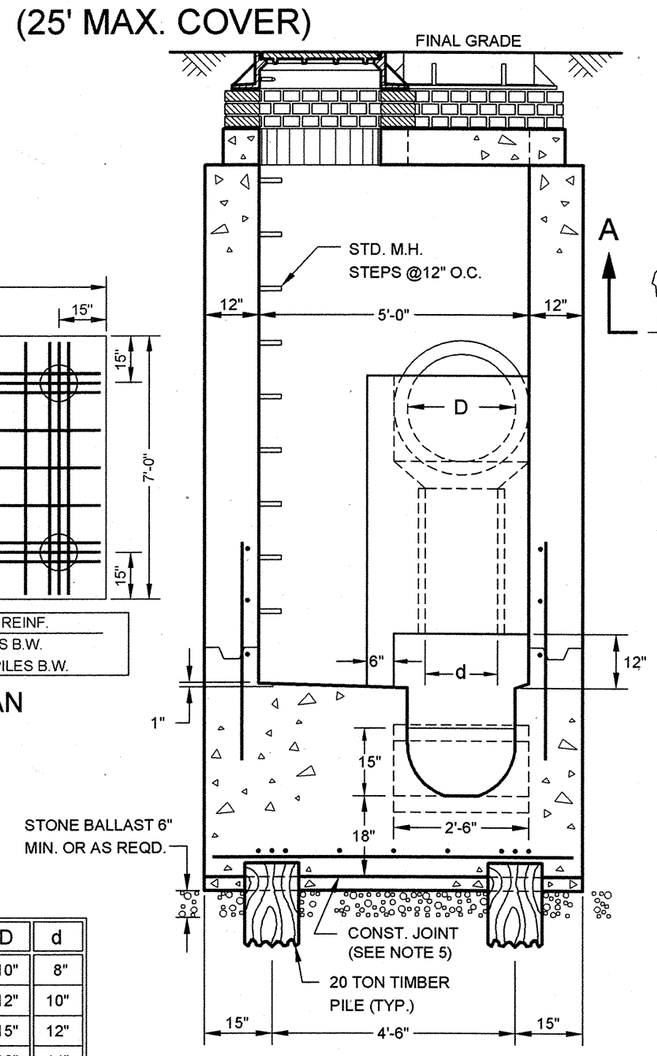

SECTION B-B

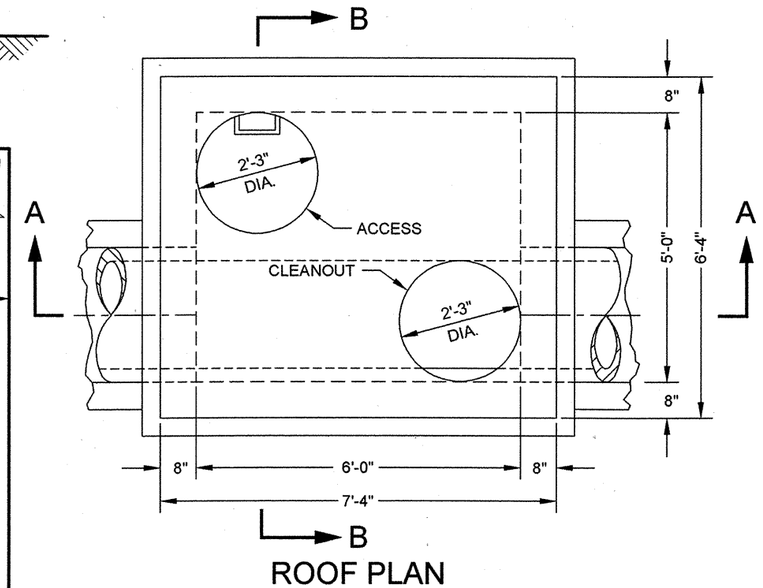

ROOF PLAN

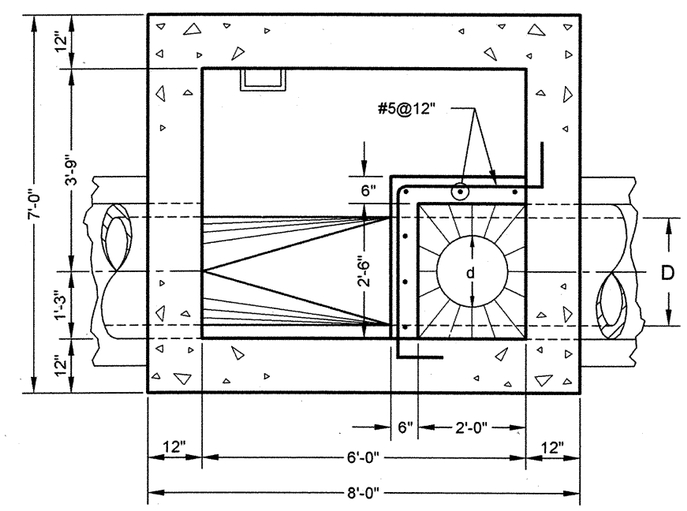

SECTION C-C

D	d
10"	8"
12"	10"
15"	12"
18"	14"
24"	16"

NOTES:

(1) WHEN LEGAL GRADE IS BELOW FINAL GRADE SEE SEWER STANDARD NO. 38.

(2) KEYED CONSTRUCTION JOINTS ARE REQUIRED BETWEEN ANY SUCCESSIVE POURS.

(3) CONCRETE IS TO BE CLASS 40. REBARS-GRADE 60.

(4) STEEL REINFORCEMENT IS #6@12" UNLESS OTHERWISE SPECIFIED. COVER FOR ALL REINFORCEMENT IS 2" CLEARANCE UNLESS OTHERWISE SPECIFIED.

(5) CONSTRUCTION JOINT TO BE UTILIZED WHENEVER GROUND CONDITIONS PREVENT SUPPORT OF PIPE.

Gigi W. Cavan P.E. 7/9/07
ASSISTANT COMMISSIONER, DESIGN
DEPARTMENT OF DESIGN AND CONSTRUCTION
DATE

Magdi Farah P.E. 8/10/07
DIRECTOR OF ENGINEERING
DEPARTMENT OF ENVIRONMENTAL PROTECTION
DATE

REVISED SEPTEMBER 2004: A. KHAN

CITY OF NEW YORK
DEPARTMENT OF ENVIRONMENTAL PROTECTION

STANDARD FOR DROP PIPE MANHOLE (TYPE II)

(FOR 10" TO 24" INCOMING DROP PIPE SEWERS)

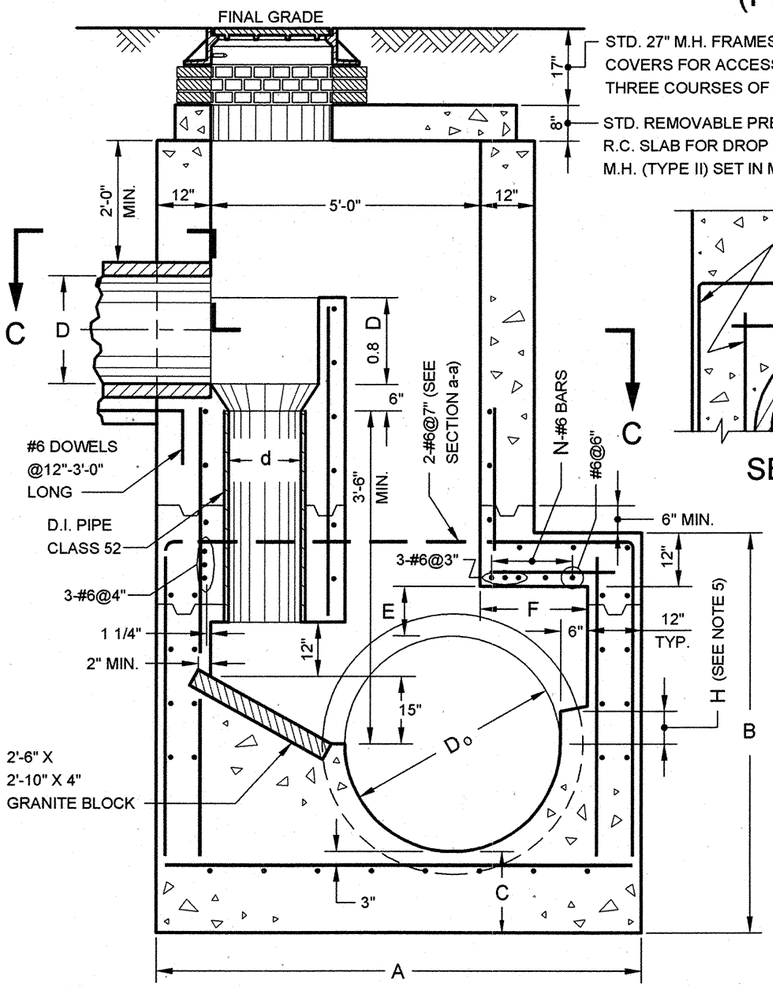

SECTION A-A

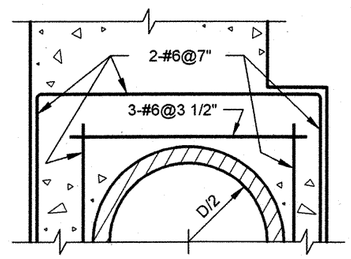

SECTION a-a

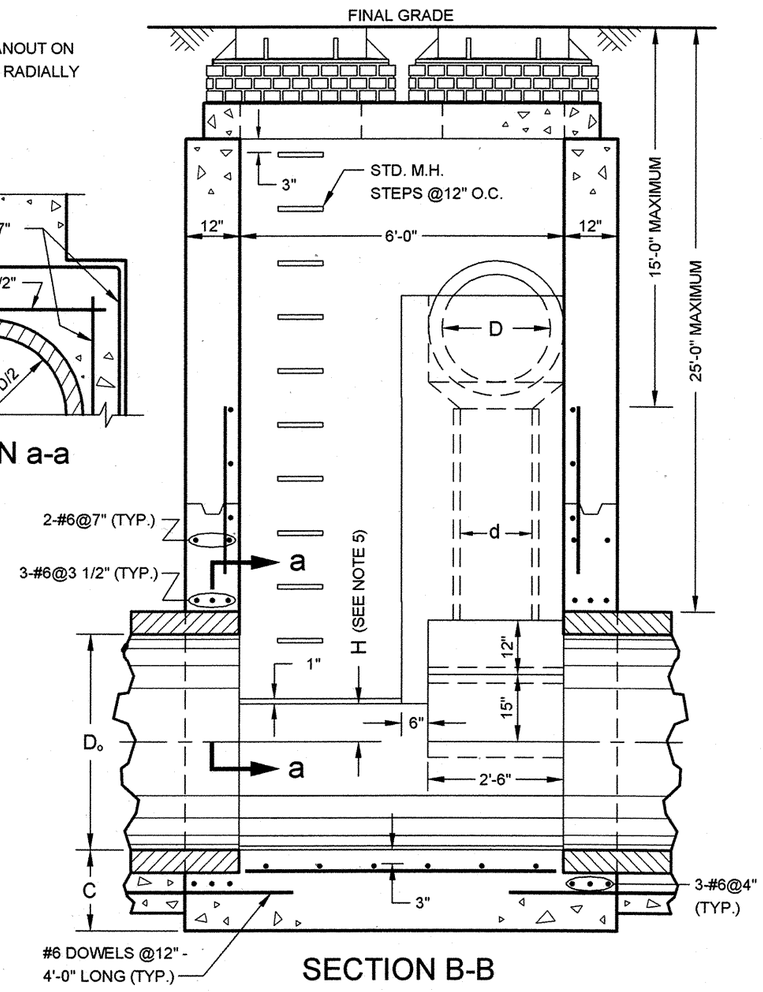

SECTION B-B

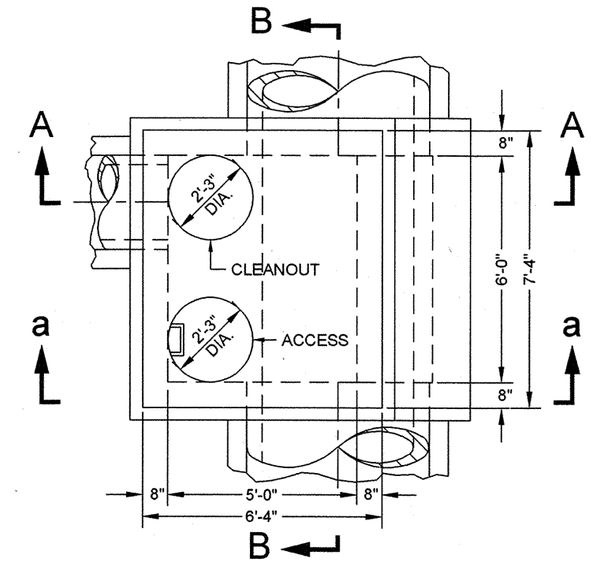

ROOF PLAN

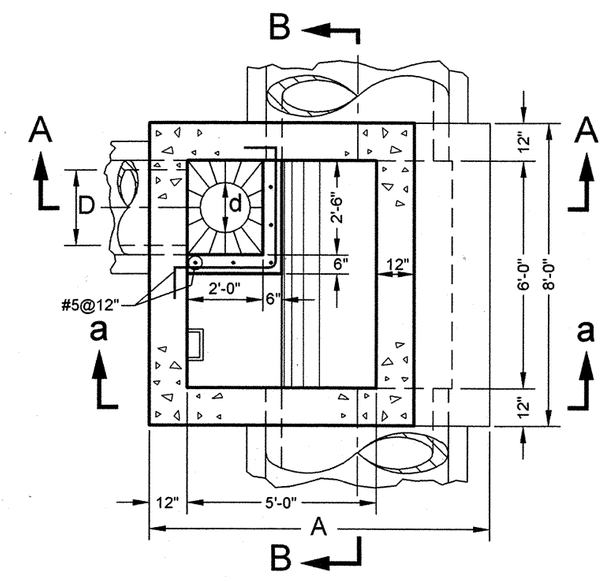

SECTION C-C

NOTES:

(1) WHEN LEGAL GRADE IS BELOW FINAL GRADE SEE SEWER STANDARD NO. 38.

(2) KEYED CONSTRUCTION JOINTS ARE REQUIRED BET. ANY SUCCESSIVE POURS.

(3) CONCRETE IS TO BE CLASS 40. REBARS-GRADE 60.

(4) STEEL REINFORCEMENT IS #6@12" UNLESS OTHERWISE SPECIFIED. COVER FOR ALL REINFORCEMENT IS 2" CLEARANCE UNLESS OTHERWISE SPECIFIED.

(5) FOR PIPE SEWERS 10" TO 30" IN DIAMETER 'H' SHALL BE Do/2. FOR PIPE SEWERS 36" TO 60" IN DIAMETER 'H' SHALL BE ZERO.

Do	A	B	C	E	F	N
10" TO 24"	7'-0"	NA	12 1/2"	NA	NA	NA
30"	7'-6"	5'-6"	14"	10"	0'-6"	1
36"	8'-0"	6'-2"	16"	10"	1'-0"	3
42"	8'-6"	6'-10"	17 1/2"	10 1/2"	1'-6"	4
48"	9'-0"	7'-5"	18"	11"	2'-0"	5
54"	9'-6"	8'-0"	18 1/2"	11 1/2"	2'-6"	6
60"	10'-0"	8'-8"	20"	12"	3'-0"	7

D	d
10"	8"
12"	10"
15"	12"
18"	14"
24"	16"

Gege W. Carron P.E.
ASSISTANT COMMISSIONER, DESIGN
DEPARTMENT OF DESIGN AND CONSTRUCTION

7/9/07
DATE

Moedi Farah P.E.
DIRECTOR OF ENGINEERING
DEPARTMENT OF ENVIRONMENTAL PROTECTION

8/10/07
DATE

REVISED DECEMBER 2006: L. ADRIEN

SE26

SE27

CITY OF NEW YORK
DEPARTMENT OF ENVIRONMENTAL PROTECTION

SE27

STANDARD FOR DROP PIPE MANHOLE (TYPE II) ON PILES

(FOR 10" TO 24" INCOMING DROP PIPE SEWERS)

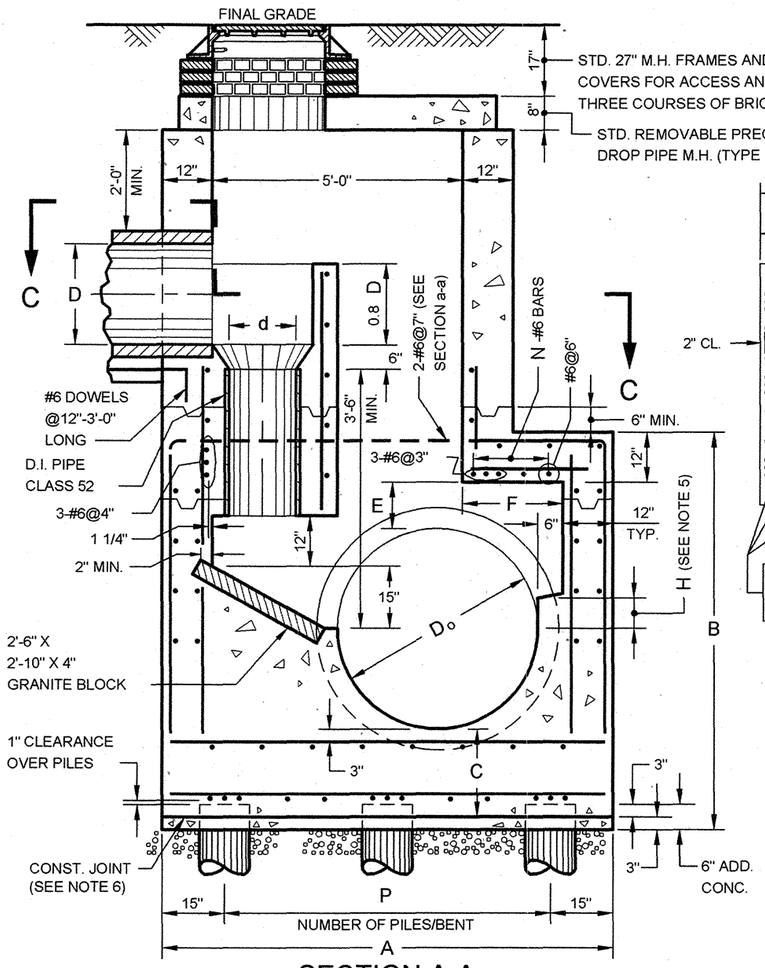

SECTION A-A

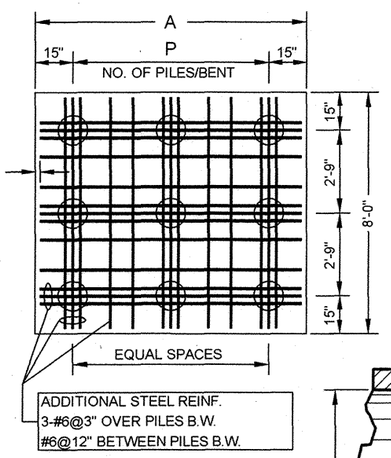

PILE PLAN

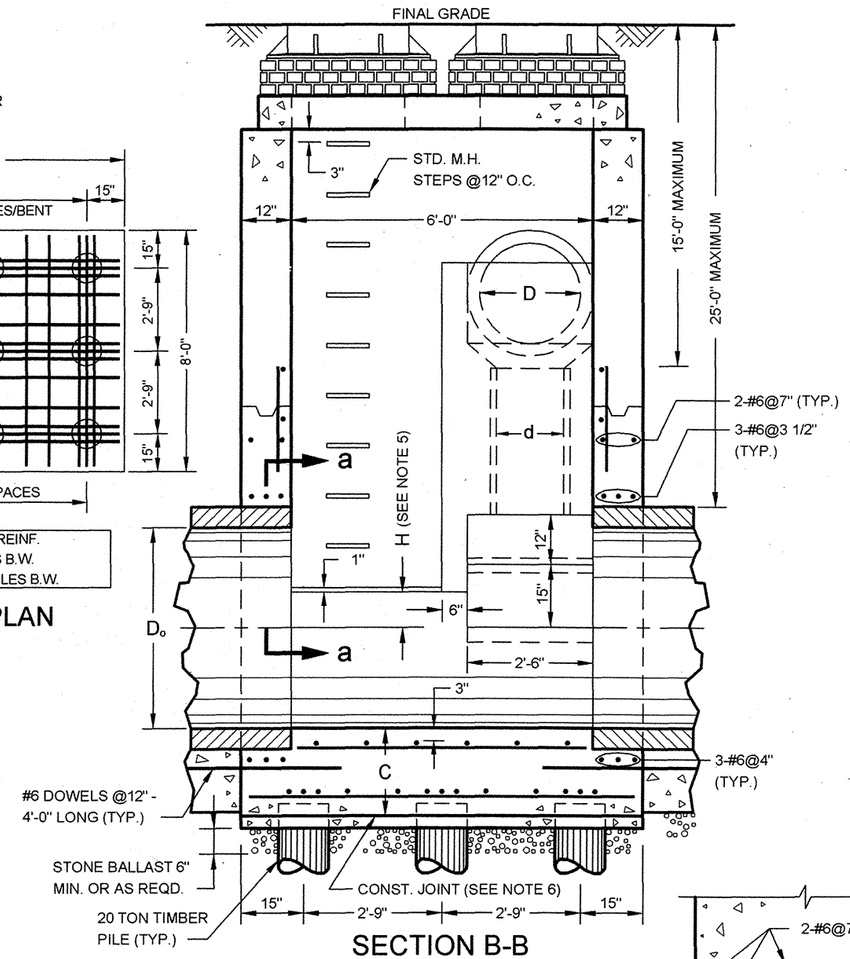

SECTION B-B

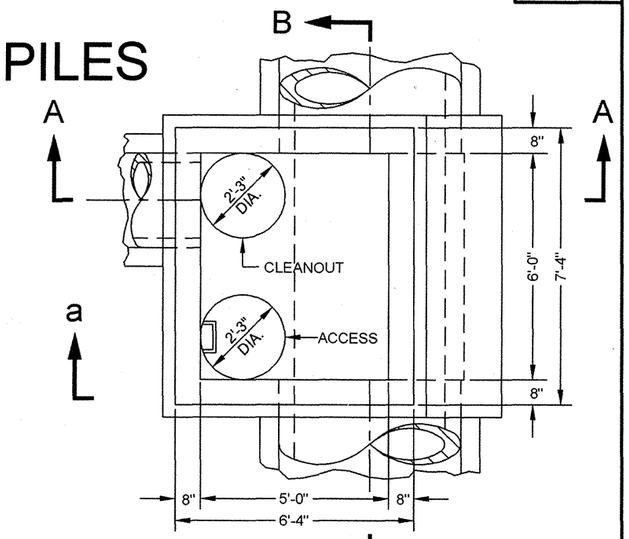

ROOF PLAN

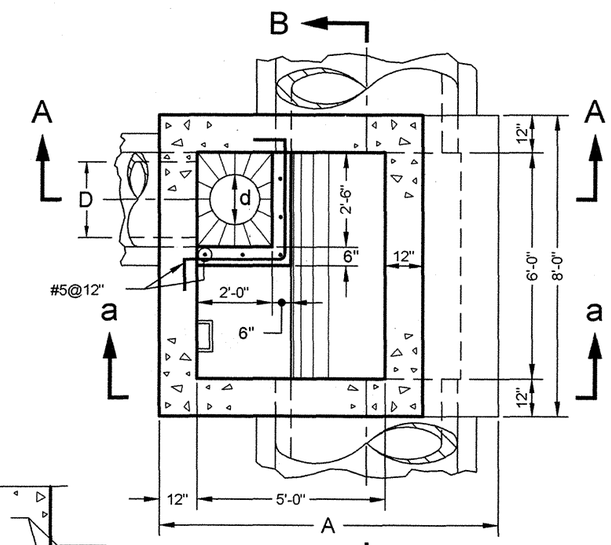

SECTION C-C

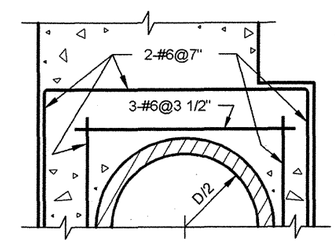

SECTION a-a

D_o	A	B	C	E	F	N	P
10" TO 24"	7'-0"	NA	15 1/2"	NA	NA	NA	2
30"	7'-6"	5'-9"	17"	10"	0'-6"	1	3
36"	8'-0"	6'-5"	19"	10"	1'-0"	3	3
42"	8'-6"	7'-1"	20 1/2"	10 1/2"	1'-6"	4	3
48"	9'-0"	7'-8"	21"	11"	2'-0"	5	3
54"	9'-6"	8'-3"	21 1/2"	11 1/2"	2'-6"	6	3
60"	10'-0"	8'-11"	23"	12"	3'-0"	7	3

D	d
10"	8"
12"	10"
15"	12"
18"	14"
24"	16"

NOTES:

(1) WHEN LEGAL GRADE IS BELOW FINAL GRADE SEE SEWER STANDARD NO. 38.

(2) KEYED CONSTRUCTION JOINTS ARE REQUIRED BET. ANY SUCCESSIVE POURS.

(3) CONCRETE IS TO BE CLASS 40. REBARS-GRADE 60.

(4) STEEL REINFORCEMENT IS #6@12" UNLESS OTHERWISE SPECIFIED.
COVER FOR ALL REINFORCEMENT IS 2" CLEARANCE UNLESS OTHERWISE SPECIFIED.

(5) FOR PIPE SEWERS 10" TO 30" IN DIAMETER 'H' SHALL BE $D_o/2$.
FOR PIPE SEWERS 36" TO 60" IN DIAMETER 'H' SHALL BE ZERO.

(6) CONSTRUCTION JOINT TO BE UTILIZED WHENEVER GROUND CONDITIONS PREVENT SUPPORT OF PIPE.

Ingel W. Carver P.E.
ASSISTANT COMMISSIONER, DESIGN
DEPARTMENT OF DESIGN AND CONSTRUCTION

7/9/07
DATE

Mazdi Tara P.E.
DIRECTOR OF ENGINEERING
DEPARTMENT OF ENVIRONMENTAL PROTECTION

8/10/07
DATE

REVISED DECEMBER 2006: L. ADRIEN

SE28A

CITY OF NEW YORK
DEPARTMENT OF ENVIRONMENTAL PROTECTION

SE28A

STANDARD FOR 4'-0" DIAMETER PRECAST MANHOLE (DWG. 1 OF 3)

(LOOSE TOP SLAB AND MONOLITHIC BASE SECTION)

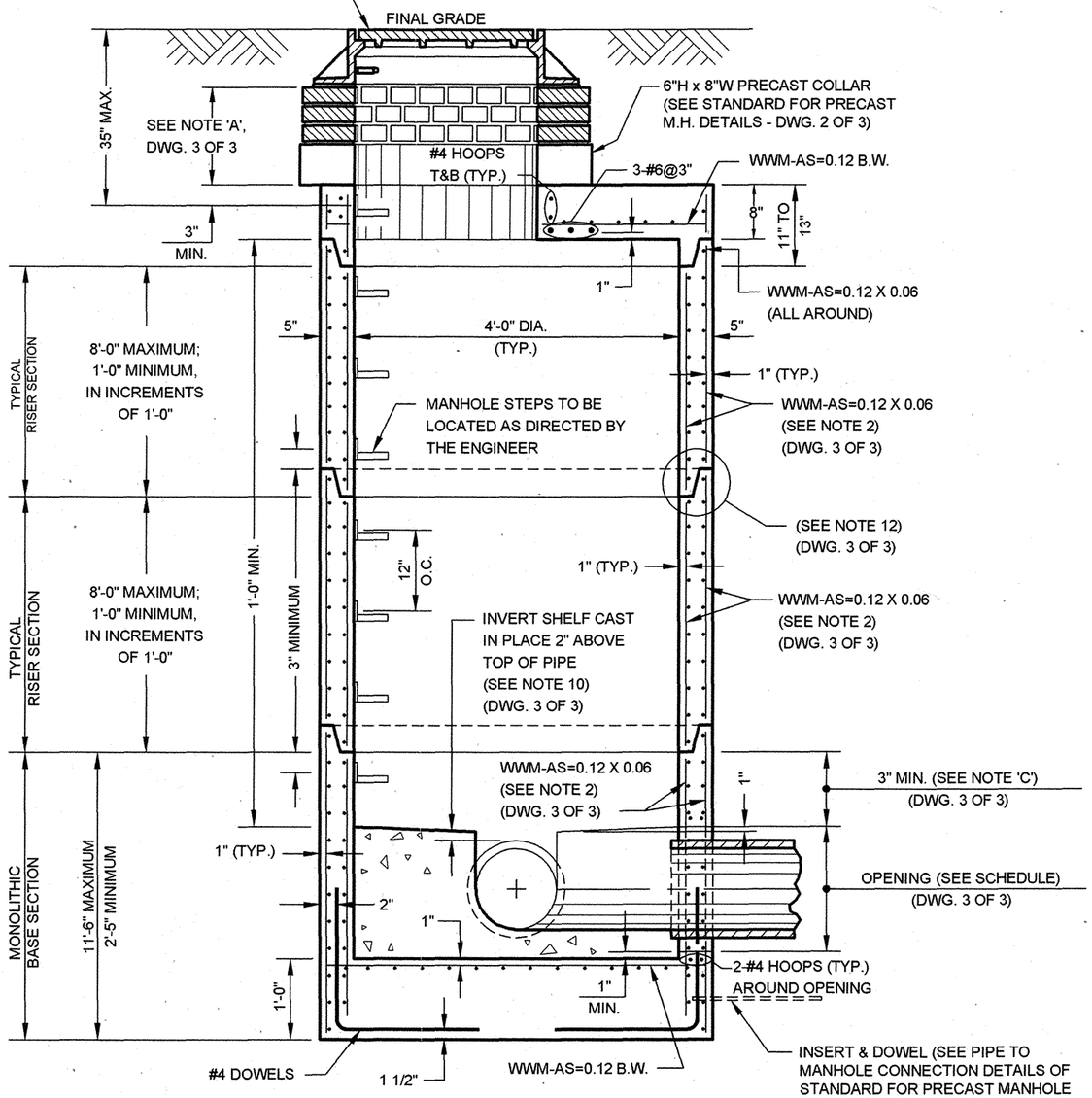

SECTION A-A

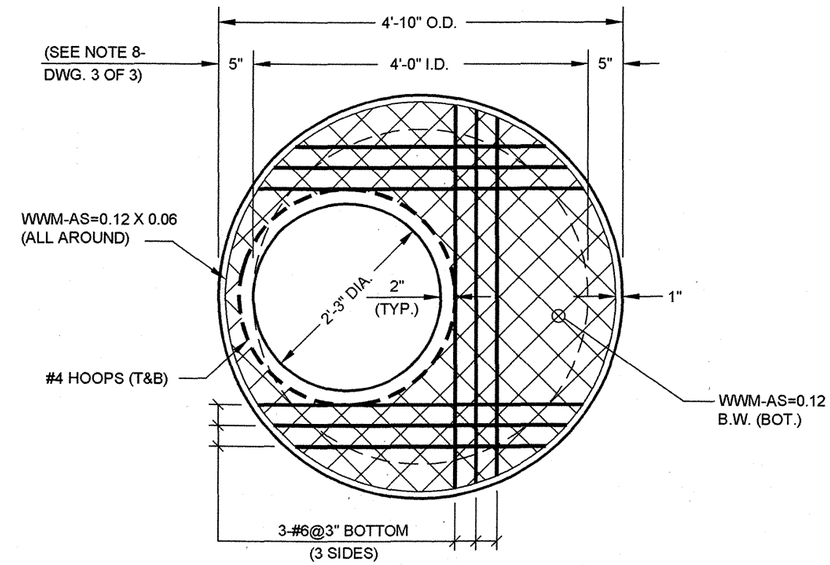

PLAN OF LOOSE TOP SLAB

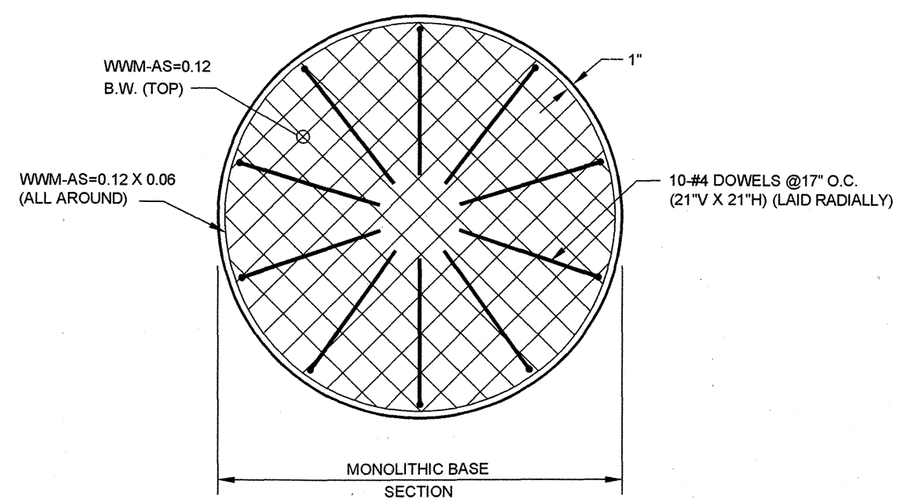

PLAN OF BOTTOM REINFORCING

Gene W. Camus P.E.
ASSISTANT COMMISSIONER, DESIGN
DEPARTMENT OF DESIGN AND CONSTRUCTION

7/9/07
DATE

Magdi Farah P.E.
DIRECTOR OF ENGINEERING
DEPARTMENT OF ENVIRONMENTAL PROTECTION

8/10/07
DATE

REVISED JUNE 2004: S. MELAMED

CITY OF NEW YORK
DEPARTMENT OF ENVIRONMENTAL PROTECTION

SE28B

STANDARD FOR 4'-0" DIAMETER PRECAST MANHOLE (DWG. 2 OF 3)

(MONOLITHIC TOP SECTION AND ALTERNATE LOOSE BOTTOM SLAB)

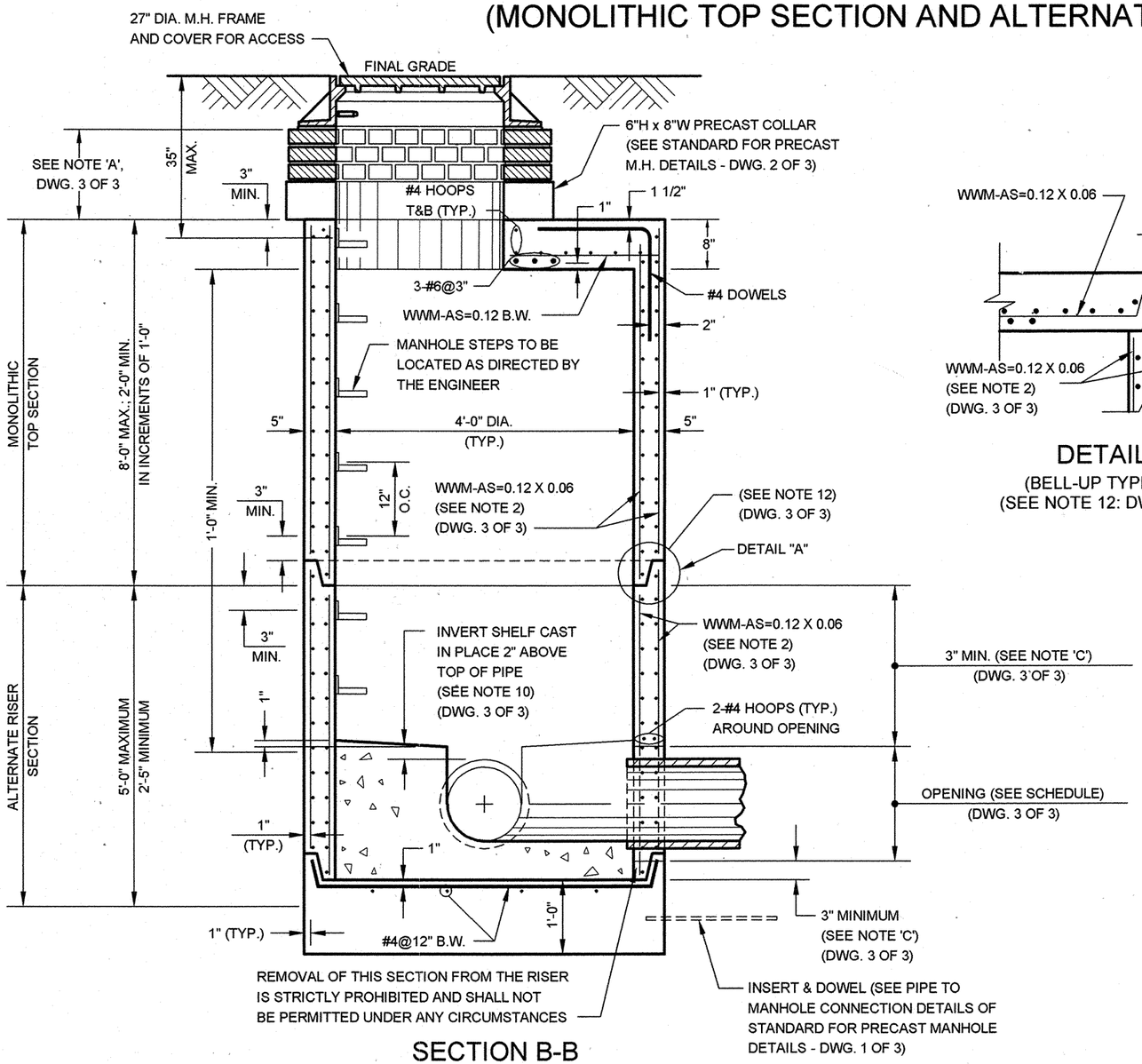

SECTION B-B

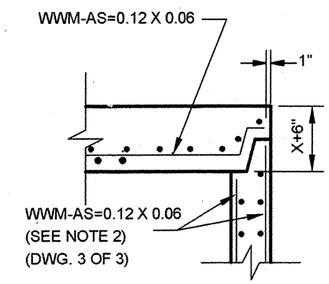

DETAIL "A"
(BELL-UP TYPE JOINT)
(SEE NOTE 12: DWG. 3 OF 3)

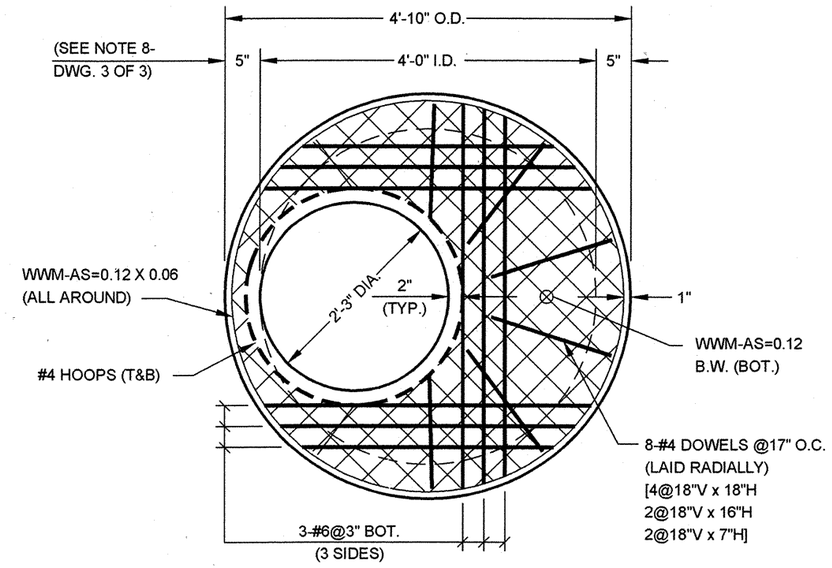

PLAN OF MONOLITHIC TOP SECTION

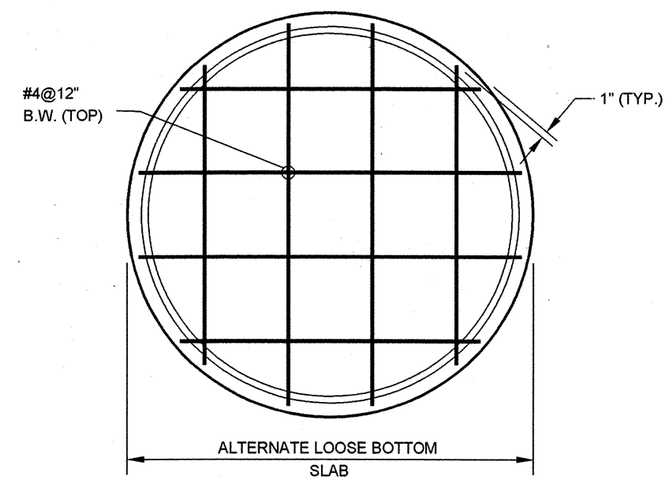

PLAN OF BOTTOM REINFORCING
(SEE NOTE 'B' - DWG. 3 OF 3)

Geze W. Carra P.E. 7/9/07
ASSISTANT COMMISSIONER, DESIGN
DEPARTMENT OF DESIGN AND CONSTRUCTION
DATE

Macdi Farag P.E. 8/10/07
DIRECTOR OF ENGINEERING
DEPARTMENT OF ENVIRONMENTAL PROTECTION
DATE

REVISED DECEMBER 2006: L. ADRIEN

CITY OF NEW YORK
DEPARTMENT OF ENVIRONMENTAL PROTECTION

SE28C

STANDARD FOR 4'-0" DIAMETER PRECAST MANHOLE (DWG. 3 OF 3)

(MISCELLANEOUS DETAIL, NOTES AND SCHEDULE)

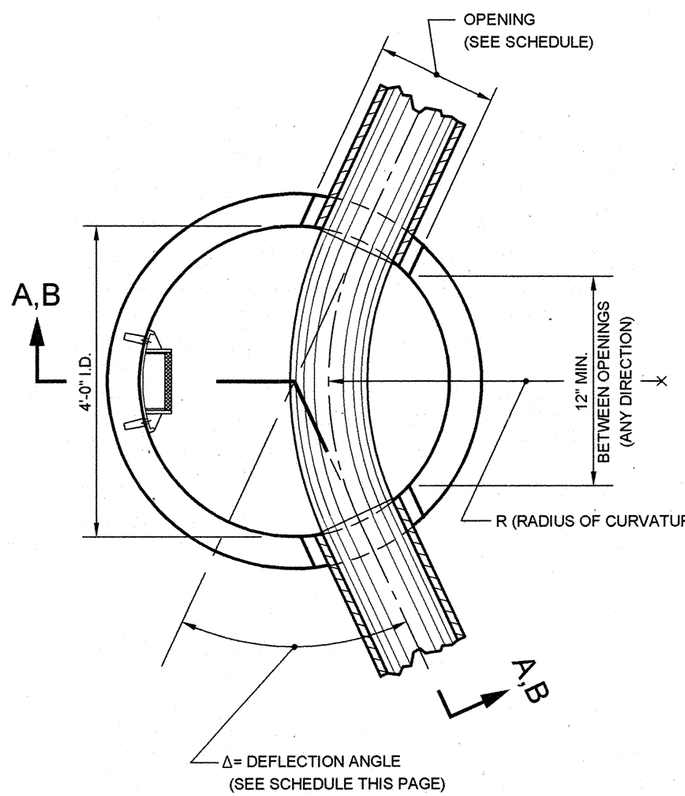

PLAN OF BASE SECTION

NOTE 'A':

9" MIN. TO 20" MAX.; 9" BRICK MIN. LAID RADIALLY, USE 1 OR 2 PRECAST COLLARS OR BRICK AS REQUIRED. (4" BRICK MIN. ONLY FOR SHALLOW MANHOLE CONSTRUCTION.)

NOTE 'B':

ALTERNATE LOOSE BOTTOM SLAB TO BE USED ONLY IN SHALLOW MANHOLE CONSTRUCTION. A SHALLOW MANHOLE IS A MANHOLE ON A SEWER WHICH HAS A COVER FROM FINAL GRADE TO THE OUTER TOP OF THE PIPE OF LESS THAN 4'-0".

NOTE 'C':

PIPE OPENINGS WILL NOT BE PERMITTED THROUGH JOINTS. DISTANCE FROM TOP OR BOTTOM OF ANY SECTION SHALL BE A MINIMUM OF 3" PLUS THE JOINT DEPTH FOR CAST PIPE OPENINGS AND A MINIMUM OF 12" PLUS THE JOINT DEPTH FOR CORED OPENINGS FOR BASIN CONNECTIONS.

NOTE 'D':

THE MANUFACTURER SHALL ENSURE THAT ALL PRECAST MANHOLE SECTIONS ARE ADDITIONALLY REINFORCED WHERE REQUIRED TO RESIST DAMAGE FROM HANDLING, SHIPPING AND INSTALLATION STRESSES.

SCHEDULE		
PIPE DIA.	OPENING*	ΔMAX.
8"	14"	117°
10"	16"	112°
12"	19"	104°
15"	22"	93°
18"	26"	83°
24"	34"	60°

* SEE NOTE 11

GENERAL NOTES:

(1) THIS 4'-0" DIA. PRECAST MANHOLE MAY BE SUBSTITUTED FOR STANDARD MANHOLE TYPES A-1, A-2, B-1 AND B-2 ON SEWERS 24" IN DIAMETER AND LESS ONLY.

(2) MANHOLE RISER REINFORCING COMPLIES WITH AREA REQUIREMENTS OF ASTM C478, EXCEPT THAT ALL WALL SECTIONS SHALL BE REINFORCED WITH WWM, AS=0.12 CIR. X 0.06 LONG. - E.F. WITH 2-#4 HOOPS AROUND ALL CAST PIPE OPENINGS (1-E.F.). (THE 2-#4 HOOPS WILL NOT BE REQUIRED AT CORED OPENINGS FOR BASIN CONNECTIONS.) (ALL VALUES OF AREA OF STEEL (AS) ARE IN SQUARE INCHES AND ARE A MINIMUM.)

(3) CORED OPENINGS WILL BE PERMITTED FOR 12" DIA. BASIN CONNECTIONS ONLY. THE MAXIMUM CORED OPENING SHALL BE 16" FOR THESE BASIN CONNECTIONS.

(4) FOR DETAILS OF STEPS, JOINTS, GASKETS, PRECAST COLLARS, PIPE TO MANHOLE CONNECTIONS, PILE CAP AND POURED IN PLACE ALTERNATE MONOLITHIC BASE SECTION SEE STANDARD FOR PRECAST MANHOLE DETAILS, STANDARD FOR MANHOLE STEPS AND STANDARD FOR ALTERNATE MONOLITHIC BASE SECTIONS FOR PRECAST MANHOLES (POURED IN PLACE).

(5) THE MAXIMUM DEPTH OF COVER OF THE 4'-0" DIA. PRECAST MANHOLE, FROM FINAL GRADE TO THE OUTER TOP OF THE PIPE, SHALL BE TWENTY FIVE (25) FEET.

(6) ALL COVER DISTANCES SHOWN FOR REINFORCEMENT ARE CLEAR DISTANCES.

(7) LIFTING HOLES SHALL BE LOCATED IN THE SECTIONS AS PER MANUFACTURER'S RECOMMENDATIONS AND GROUTED PRIOR TO BACKFILLING.

(8) THE VALUES OF THE WALL AND SLAB THICKNESSES ARE A MINIMUM.

(9) CONCRETE DESIGN MIX = 5,000 PSI (MIN. 28 DAY STRENGTH = 4,000 PSI; MAX. W/C = 0.47). REBARS - FS = 60,000 PSI. WWM - FS = 65,000 PSI.

(10) INVERT SHELVES SHALL HAVE A 1/2" PER LINEAR FOOT PITCH TOWARDS THE SEWER.

(11) THE OPENING DIAMETERS SHOWN IN THE SCHEDULE ARE MAXIMUM VALUES. THE MINIMUM OPENING DIAMETERS SHALL BE AS FOLLOWS: 8" TO 24" DIA. PIPES = O.D.+3".

(12) BELL-UP TYPE JOINTS SHALL BE ALLOWED FOR 4'-0" DIA. PRECAST MANHOLE, WITH THE FOLLOWING MODIFICATION TO THE LOOSE TOP SLAB: (A) THE MINIMUM SLAB THICKNESS SHALL BE X+6" (WHERE 'X' IS JOINT DEPTH) AND (B) THE EMBEDMENT LENGTH SHALL BE T-1" (WHERE T IS THE THICKNESS OF RISER WALL); SEE DETAIL "A" ON DWG. 2 OF 3.

REVISED OCTOBER 2004: L. ADRIEN

Gye W. Lamar P.E.
ASSISTANT COMMISSIONER, DESIGN
DEPARTMENT OF DESIGN AND CONSTRUCTION

7/9/07
DATE

Mazdi Fara P.E.
DIRECTOR OF ENGINEERING
DEPARTMENT OF ENVIRONMENTAL PROTECTION

8/10/07
DATE

SE29A

CITY OF NEW YORK
DEPARTMENT OF ENVIRONMENTAL PROTECTION

STANDARD FOR 5'-0" DIAMETER PRECAST MANHOLE (DWG. 1 OF 3)

(LOOSE TOP SLAB AND MONOLITHIC BASE SECTION)

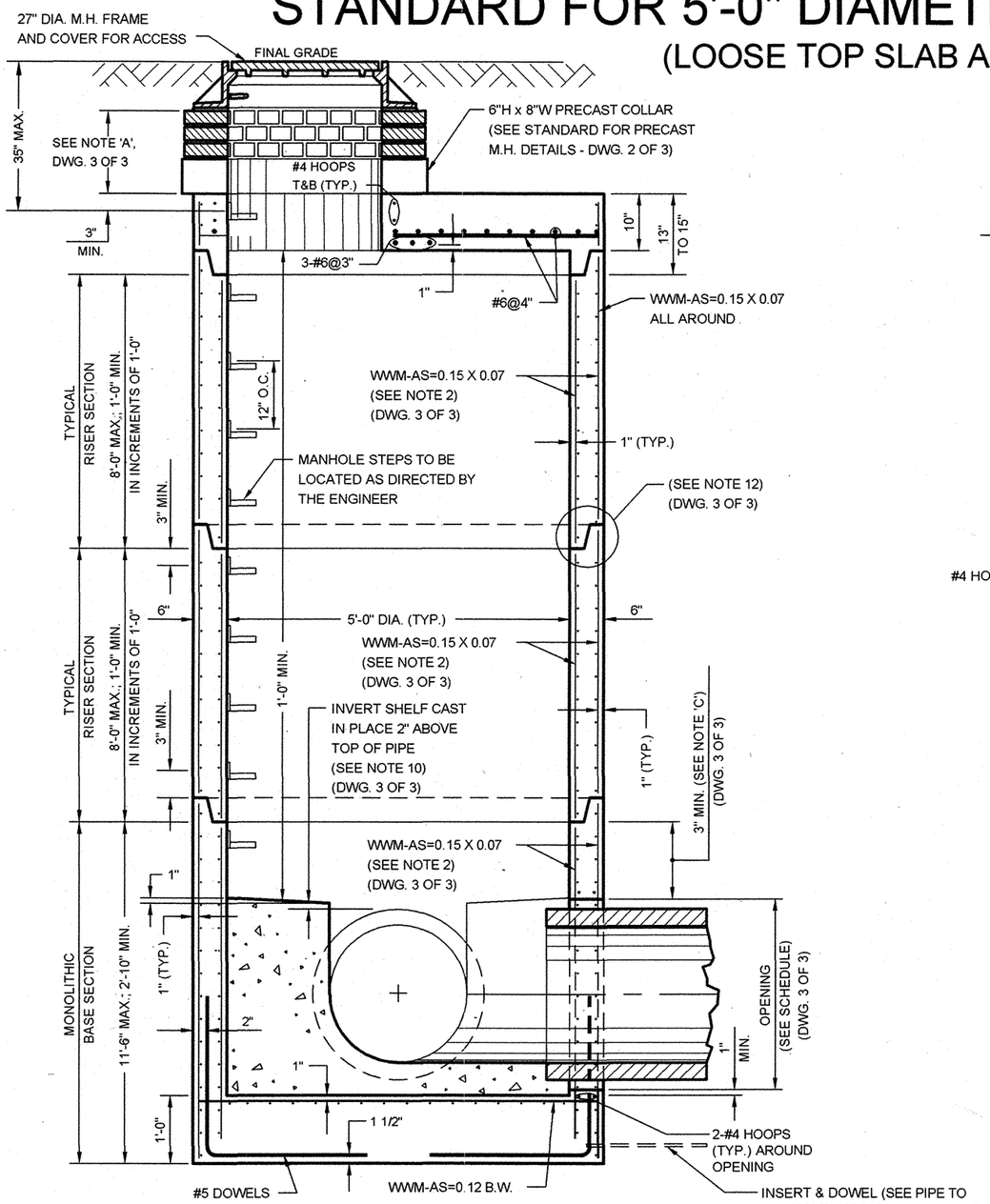

SECTION A-A

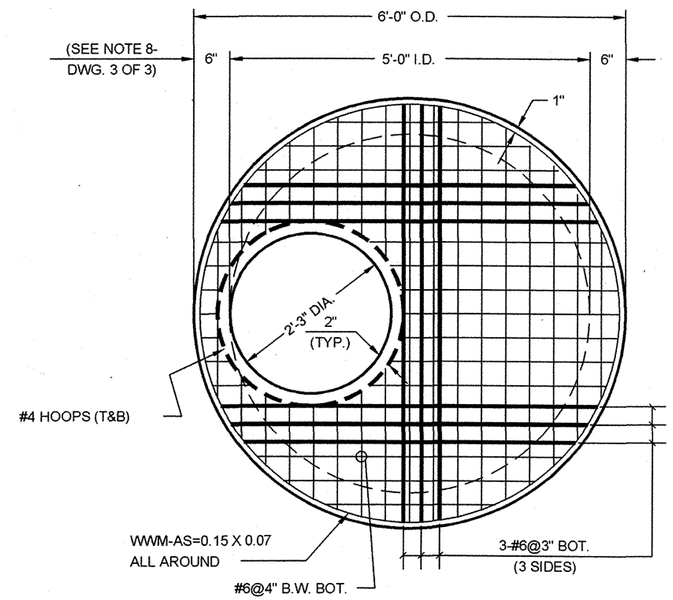

PLAN OF LOOSE TOP SLAB

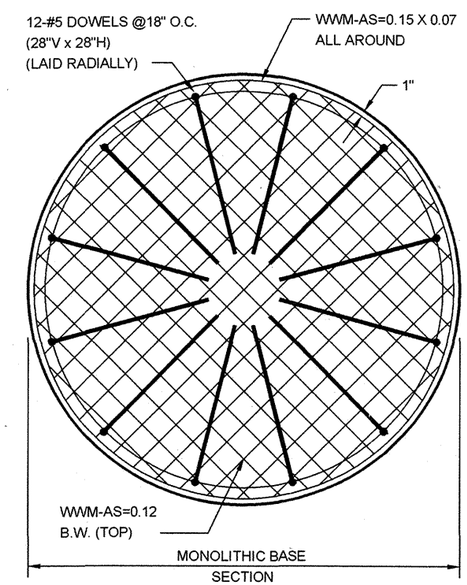

PLAN OF BOTTOM REINFORCING

Lyle W. Carver P.E.
ASSISTANT COMMISSIONER, DESIGN
DEPARTMENT OF DESIGN AND CONSTRUCTION

7/9/07
DATE

Mangesh Tanna P.E.
DIRECTOR OF ENGINEERING
DEPARTMENT OF ENVIRONMENTAL PROTECTION

8/10/07
DATE

REVISED MAY 2007: L. ADRIEN

SE29B

CITY OF NEW YORK
DEPARTMENT OF ENVIRONMENTAL PROTECTION

SE29B

STANDARD FOR 5'-0" DIAMETER PRECAST MANHOLE (DWG. 2 OF 3)

(MONOLITHIC TOP SECTION AND ALTERNATE LOOSE BOTTOM SLAB)

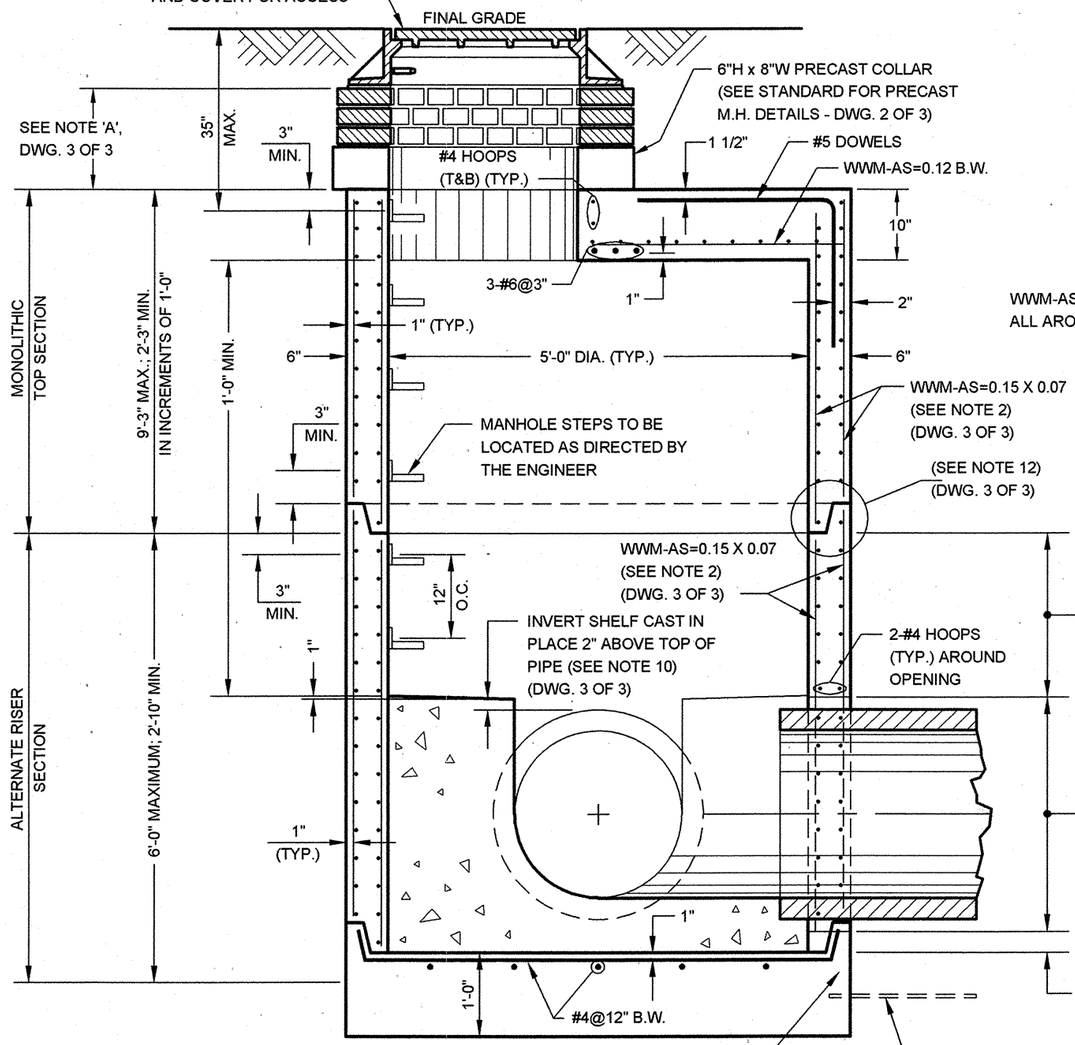

SECTION B-B

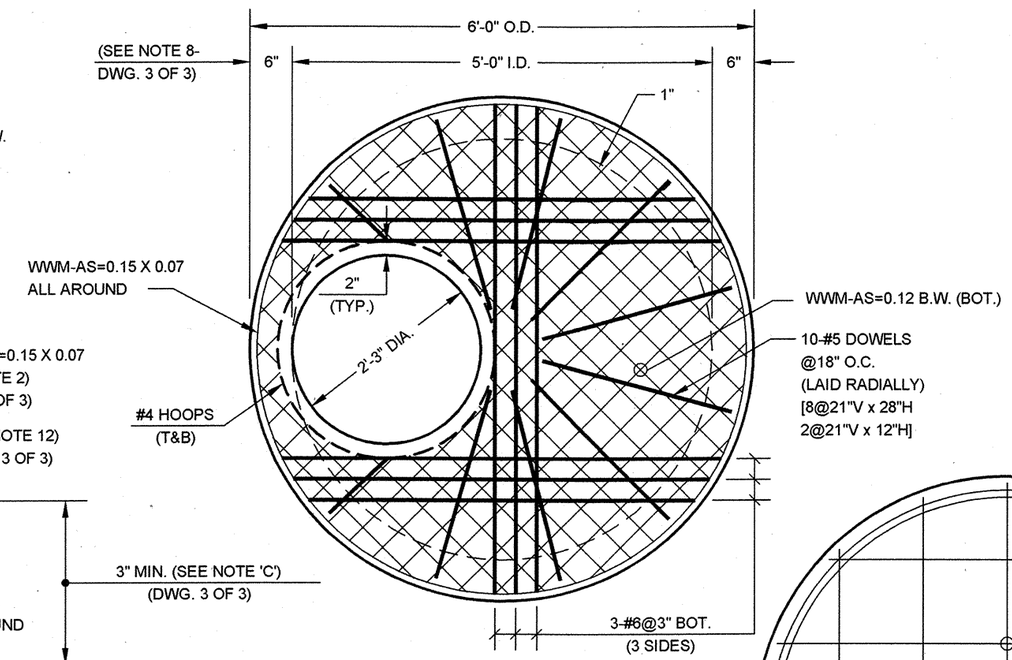

PLAN OF MONOLITHIC
TOP SECTION

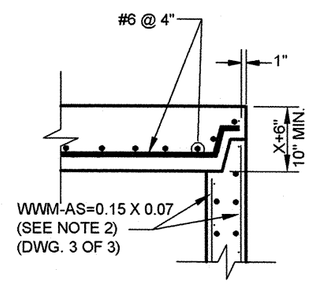

DETAIL "A"
(BELL-UP TYPE JOINT)
(SEE NOTE 12: DWG. 3 OF 3)

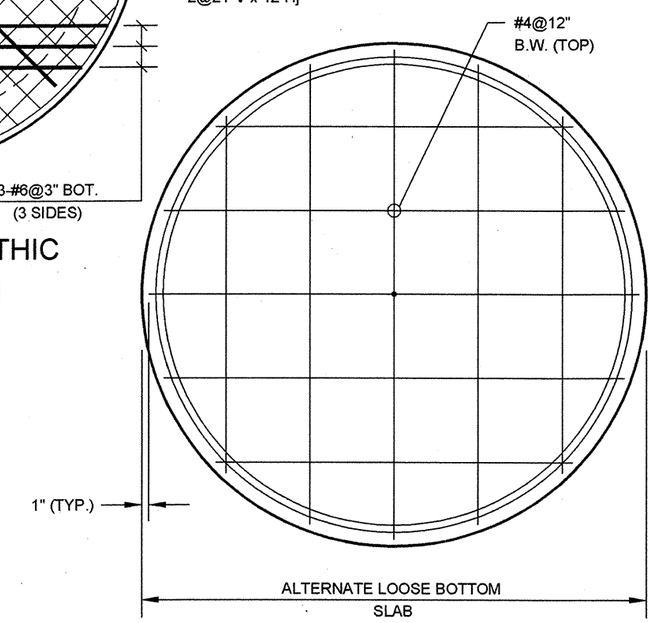

PLAN OF BOTTOM REINFORCING
(SEE NOTE 'B' - DWG. 3 OF 3)

P.E.
ASSISTANT COMMISSIONER, DESIGN
DEPARTMENT OF DESIGN AND CONSTRUCTION

7/9/07
DATE

P.E.
DIRECTOR OF ENGINEERING
DEPARTMENT OF ENVIRONMENTAL PROTECTION

8/10/07
DATE

REVISED AUGUST 2004: S. MELAMED

CITY OF NEW YORK
DEPARTMENT OF ENVIRONMENTAL PROTECTION

SE29C

STANDARD FOR 5'-0" DIAMETER PRECAST MANHOLE (DWG. 3 OF 3)

(MISCELLANEOUS DETAIL, NOTES AND SCHEDULE)

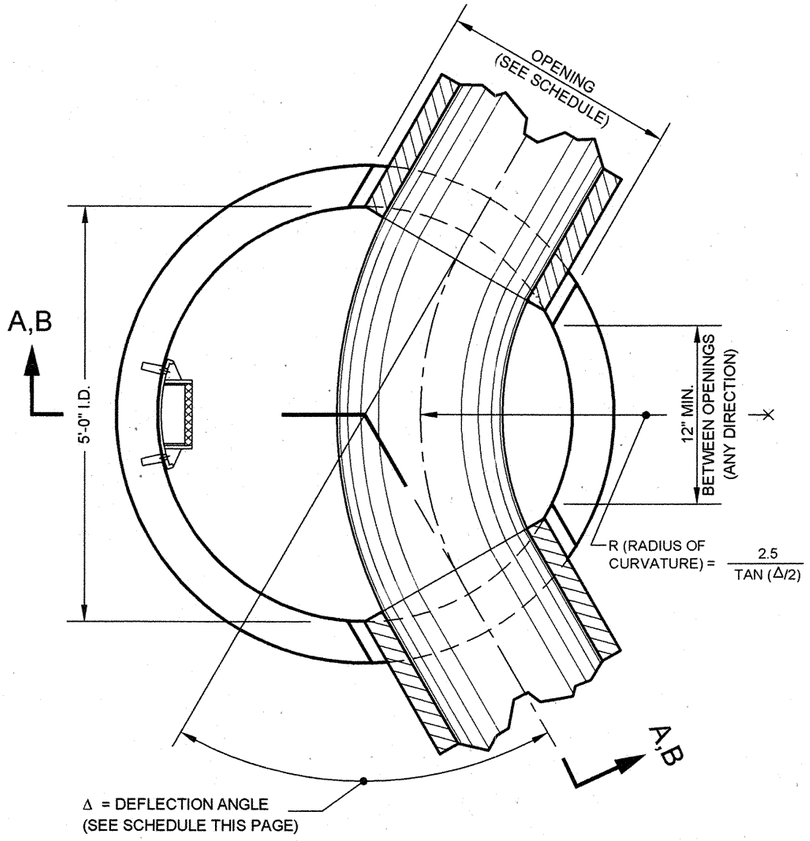

PLAN OF BASE SECTION

SCHEDULE		
PIPE DIA.	OPENING*	Δ MAX.
12"	19"	118°
15"	22"	106°
18"	26"	96°
24"	34"	79°
30"	42"	67°
36"	49"	47°

* SEE NOTE 11

NOTE 'A':

9" MIN. TO 20" MAX.; 9" BRICK MIN. LAID RADIALLY, USE 1 OR 2 PRECAST COLLARS OR BRICK AS REQUIRED. (4" BRICK MIN. ONLY FOR SHALLOW MANHOLE CONSTRUCTION.)

NOTE 'B':

ALTERNATE LOOSE BOTTOM SLAB TO BE USED ONLY IN SHALLOW MANHOLE CONSTRUCTION. A SHALLOW MANHOLE IS A MANHOLE ON A SEWER WHICH HAS A COVER FROM FINAL GRADE TO THE OUTER TOP OF THE PIPE OF LESS THAN 4'-0".

NOTE 'C':

PIPE OPENINGS WILL NOT BE PERMITTED THROUGH JOINTS. DISTANCE FROM TOP OR BOTTOM OF ANY SECTION SHALL BE A MINIMUM OF 3" PLUS THE JOINT DEPTH FOR CAST PIPE OPENINGS AND A MINIMUM OF 12" PLUS THE JOINT DEPTH FOR CORED OPENINGS FOR BASIN CONNECTIONS.

NOTE 'D':

THE MANUFACTURER SHALL ENSURE THAT ALL PRECAST MANHOLE SECTIONS ARE ADDITIONALLY REINFORCED WHERE REQUIRED TO RESIST DAMAGE FROM HANDLING, SHIPPING AND INSTALLATION STRESSES.

GENERAL NOTES:

(1) THIS 5'-0" DIA. PRECAST MANHOLE MAY BE SUBSTITUTED FOR STANDARD MANHOLE TYPES A-1, A-2, B-1, B-2, C-1 AND C-2 ON SEWERS 36" IN DIAMETER AND LESS ONLY.

(2) MANHOLE RISER REINFORCING COMPLIES WITH AREA REQUIREMENTS OF ASTM C478, EXCEPT THAT ALL WALL SECTIONS SHALL BE REINFORCED WITH WWM, AS=0.15 CIR. X 0.07 LONG. - E.F. WITH 2-#4 HOOPS AROUND ALL CAST PIPE OPENINGS (1-E.F.). (THE 2-#4 HOOPS WILL NOT BE REQUIRED AT CORED OPENINGS FOR BASIN CONNECTIONS.) (ALL VALUES OF AREA OF STEEL (AS) ARE IN SQUARE INCHES AND ARE A MINIMUM.)

(3) CORED OPENINGS WILL BE PERMITTED FOR 12" DIA. BASIN CONNECTIONS ONLY. THE MAXIMUM CORED OPENING SHALL BE 16" FOR THESE BASIN CONNECTIONS.

(4) FOR DETAILS OF STEPS, JOINTS, GASKETS, PRECAST COLLARS, PIPE TO MANHOLE CONNECTIONS, PILE CAP AND POURED IN PLACE ALTERNATE MONOLITHIC BASE SECTION SEE STANDARD FOR PRECAST MANHOLE DETAILS, STANDARD FOR MANHOLE STEPS AND STANDARD FOR ALTERNATE MONOLITHIC BASE SECTIONS FOR PRECAST MANHOLES (POURED IN PLACE).

(5) THE MAXIMUM DEPTH OF COVER OF THE 5'-0" DIA. PRECAST MANHOLE, FROM FINAL GRADE TO THE OUTER TOP OF THE PIPE, SHALL BE TWENTY FIVE (25) FEET.

(6) ALL COVER DISTANCES SHOWN FOR REINFORCEMENT ARE CLEAR DISTANCES.

(7) LIFTING HOLES SHALL BE LOCATED IN THE SECTIONS AS PER MANUFACTURER'S RECOMMENDATIONS AND GROUTED PRIOR TO BACKFILLING.

(8) THE VALUES OF THE WALL AND SLAB THICKNESSES ARE A MINIMUM.

(9) CONCRETE DESIGN MIX = 5,000 PSI (MIN. 28 DAY STRENGTH = 4,000 PSI; MAX. W/C = 0.47). REBARS - FS = 60,000 PSI. WWM - FS = 65,000 PSI.

(10) INVERT SHELVES SHALL HAVE A 1/2" PER LINEAR FOOT PITCH TOWARDS THE SEWER.

(11) THE OPENING DIAMETERS SHOWN IN THE SCHEDULE ARE MAXIMUM VALUES. THE MINIMUM OPENING DIAMETERS SHALL BE AS FOLLOWS: 8" TO 24" DIA. PIPES = O.D.+3"; 30" TO 36" DIA. PIPES = O.D.+4".

(12) BELL-UP TYPE JOINTS SHALL BE ALLOWED FOR 5'-0" DIA. PRECAST MANHOLE, WITH THE FOLLOWING MODIFICATION TO THE LOOSE TOP SLAB: (A) THE MINIMUM SLAB THICKNESS SHALL BE X+6" (WHERE 'X' IS JOINT DEPTH), BUT IN NO CASE SHALL IT BE LESS THAN 10" THICK AND (B) THE EMBEDMENT LENGTH SHALL BE t-1" (WHERE t IS THE THICKNESS OF RISER WALL); SEE DETAIL "A".

Peter W. Lanza P.E. — 7/9/07
ASSISTANT COMMISSIONER, DESIGN
DEPARTMENT OF DESIGN AND CONSTRUCTION
DATE

Magdi Farah P.E. — 8/10/07
DIRECTOR OF ENGINEERING
DEPARTMENT OF ENVIRONMENTAL PROTECTION
DATE

REVISED JUNE 2004: MELAMED

SE30A

CITY OF NEW YORK
DEPARTMENT OF ENVIRONMENTAL PROTECTION

SE30A

STANDARD FOR PRECAST MANHOLE (DWG. 1 OF 4)

(FOR 6'-0", 7'-0", 8'-0" AND 10'-0" DIA. PRECAST MANHOLE)
(LOOSE TOP SLAB AND MONOLITHIC BASE SECTION)

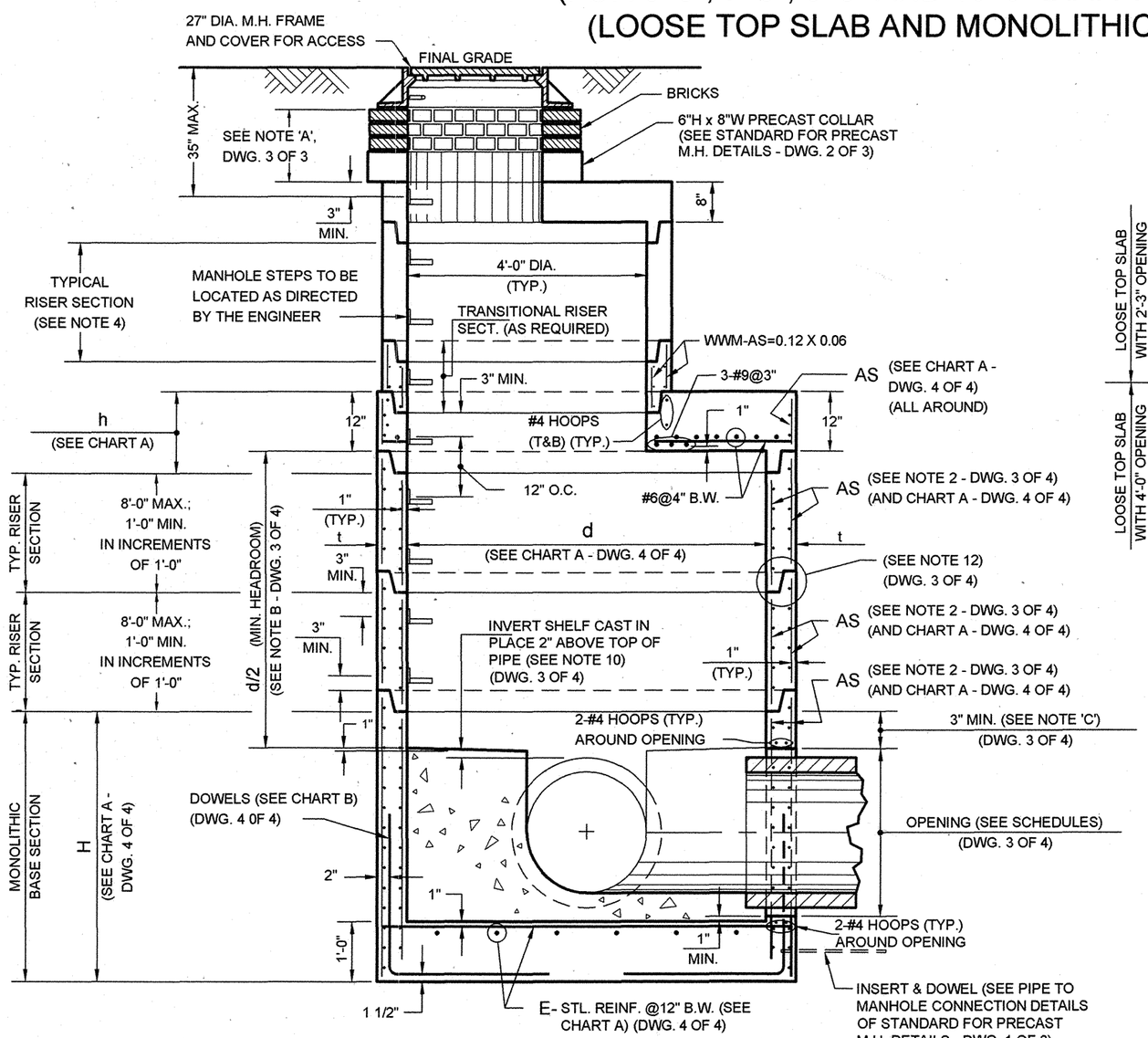

SECTION A-A

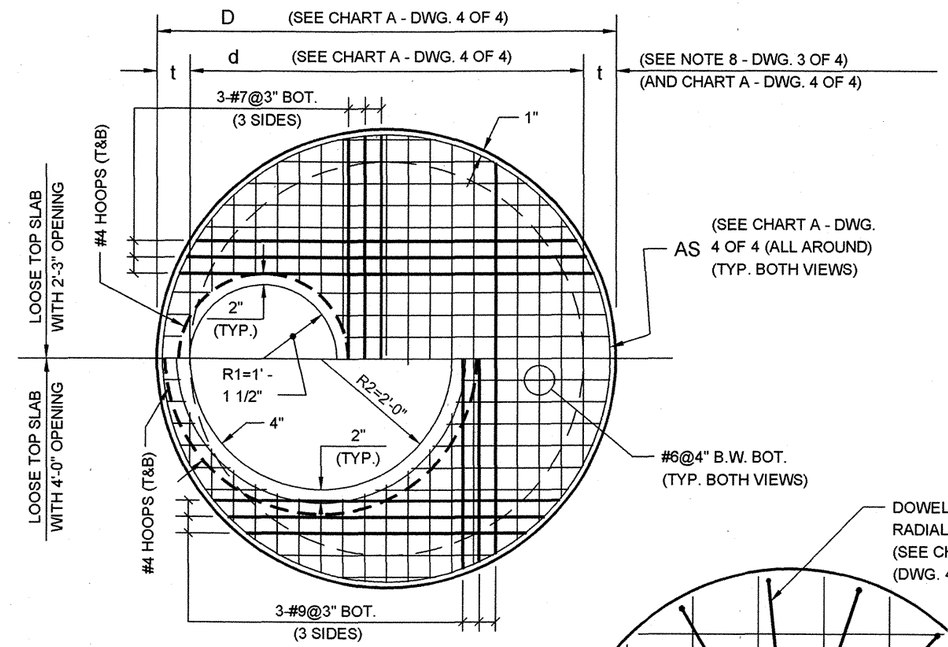

PLAN OF LOOSE TOP SLAB

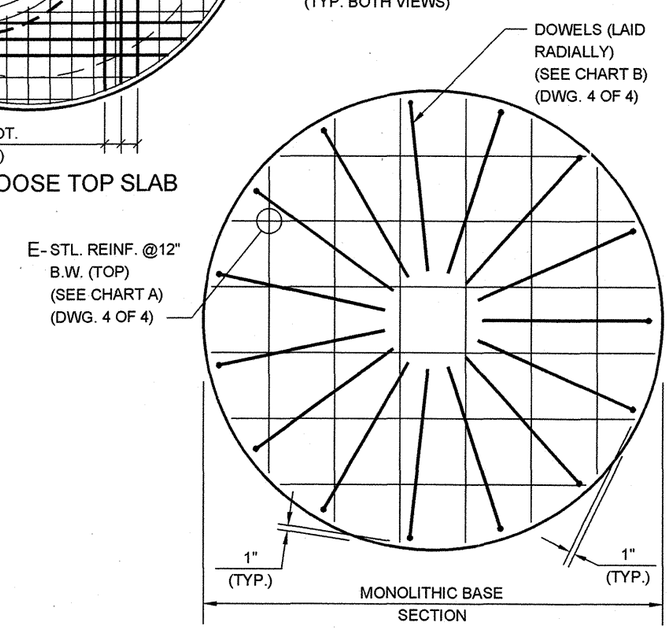

PLAN OF BOTTOM REINFORCING

REVISED AUGUST 2004: S. MELAMED

P.E. 7/9/07
ASSISTANT COMMISSIONER, DESIGN
DEPARTMENT OF DESIGN AND CONSTRUCTION
DATE

P.E. 8/10/07
DIRECTOR OF ENGINEERING
DEPARTMENT OF ENVIRONMENTAL PROTECTION
DATE

SE30B

CITY OF NEW YORK
DEPARTMENT OF ENVIRONMENTAL PROTECTION

SE30B

STANDARD FOR PRECAST MANHOLE (DWG. 2 OF 4)

(FOR 6'-0", 7'-0", 8'-0" AND 10'-0" DIA. PRECAST MANHOLE)
(MONOLITHIC TOP SECTION AND ALTERNATE LOOSE BOTTOM SLAB)
(SEE NOTE 'B' - DWG. 3 OF 4)

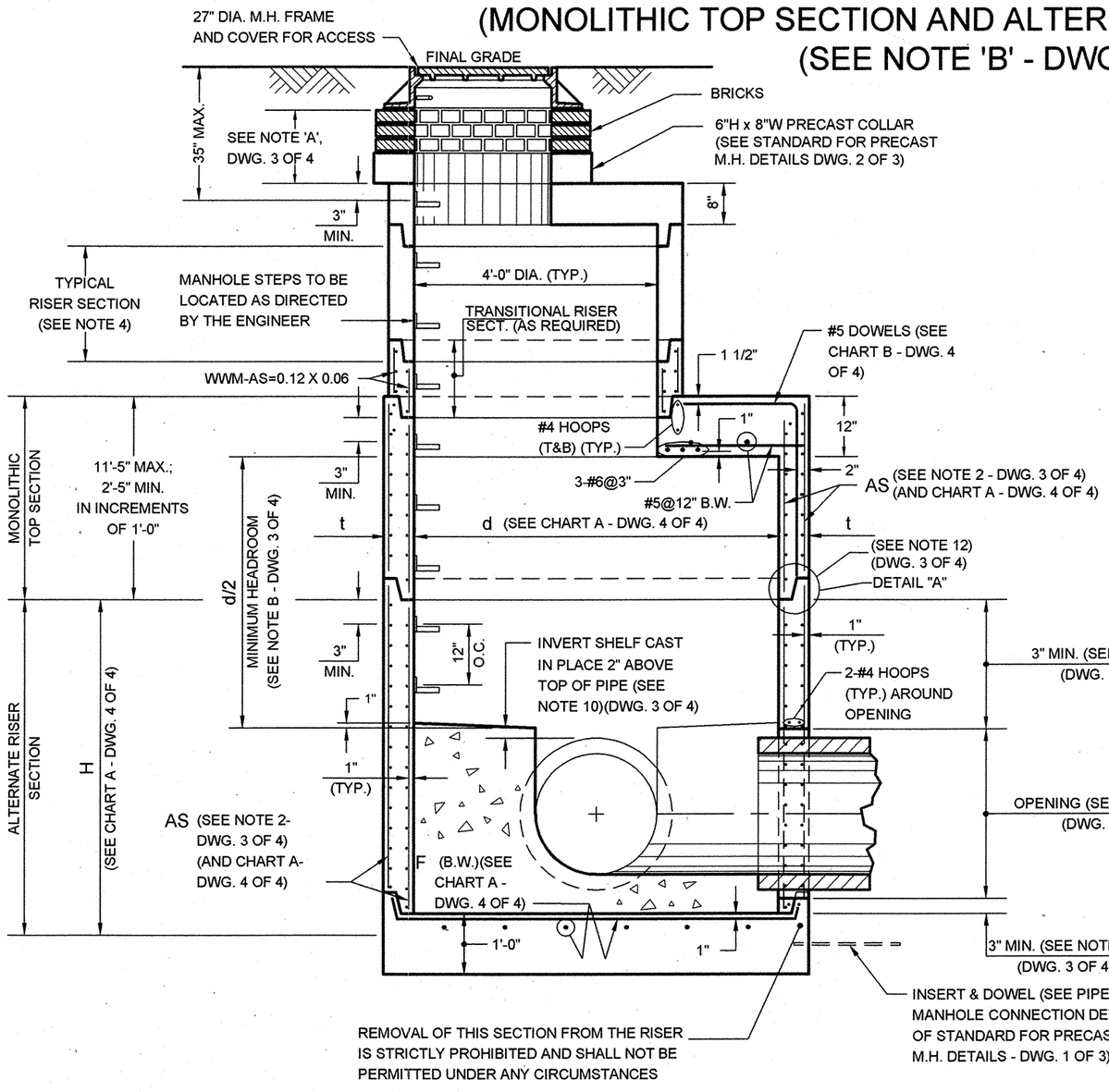

SECTION B-B

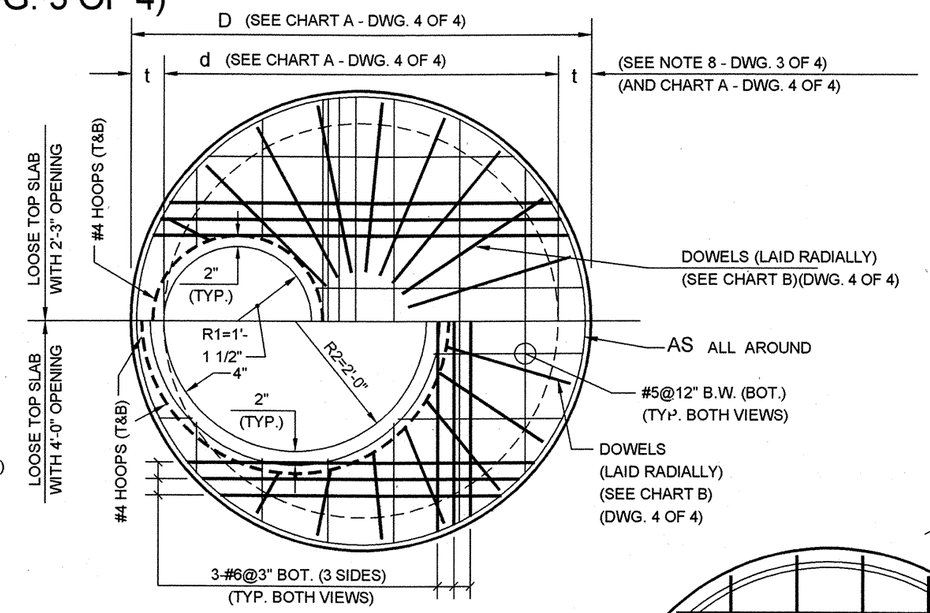

PLAN OF MONOLITHIC TOP SECTION

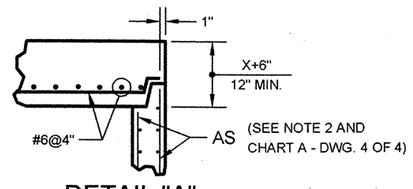

DETAIL "A"
(BELL-UP TYPE JOINT)
(SEE NOTE 12)

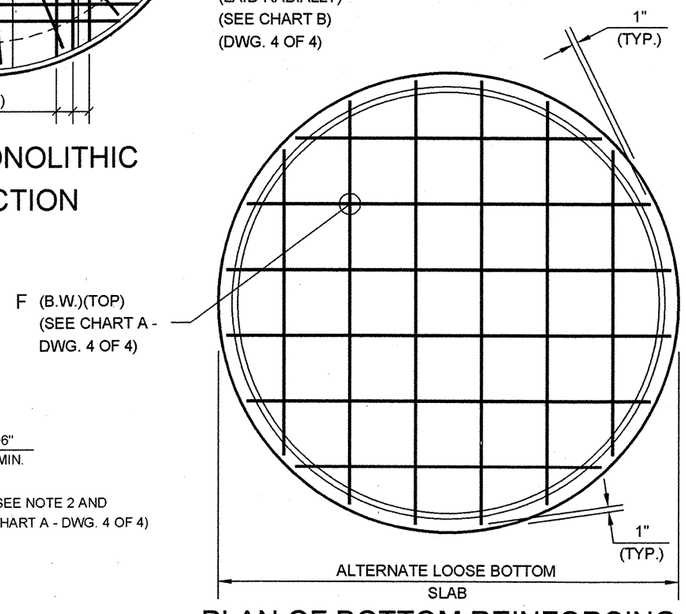

PLAN OF BOTTOM REINFORCING

Peter W. Baron P.E.
ASSISTANT COMMISSIONER, DESIGN
DEPARTMENT OF DESIGN AND CONSTRUCTION

7/9/07
DATE

Vincenzo di Paola P.E.
DIRECTOR OF ENGINEERING
DEPARTMENT OF ENVIRONMENTAL PROTECTION

8/10/07
DATE

REVISED AUGUST 2004: S. MELAMED

CITY OF NEW YORK
DEPARTMENT OF ENVIRONMENTAL PROTECTION

SE30C

STANDARD FOR PRECAST MANHOLE (DWG. 3 OF 4)

(FOR 6'-0", 7'-0", 8'-0" AND 10'-0" DIA. PRECAST MANHOLE)
(PRECAST MANHOLE MISCELLANEOUS DETAIL, NOTES AND SCHEDULES)

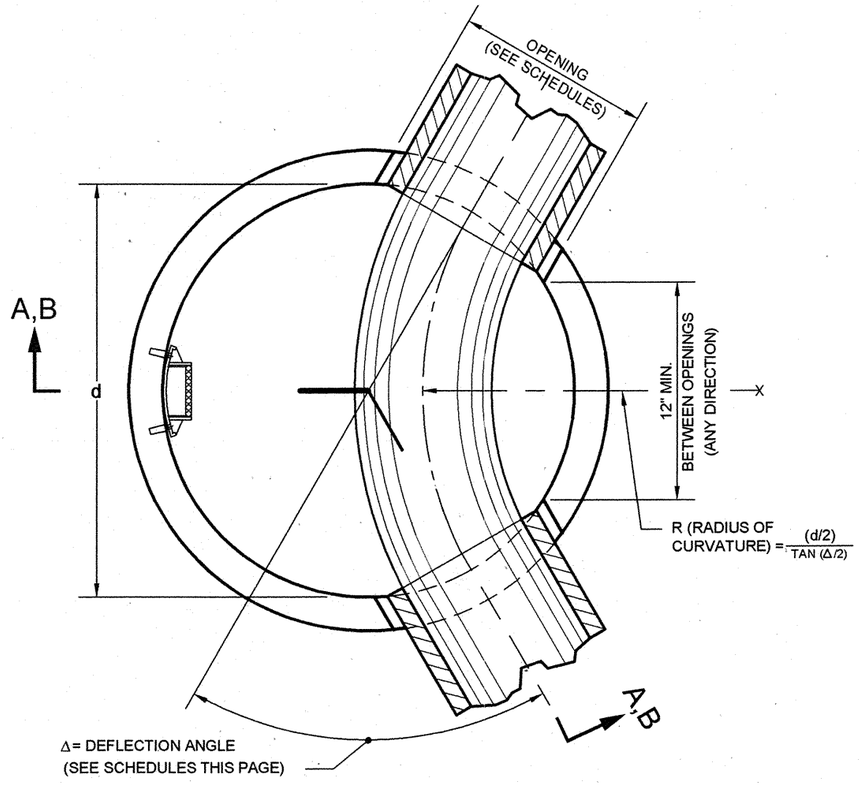

PLAN OF BASE SECTION

NOTE 'A':

9" MIN. TO 20" MAX.; 9" BRICK MIN. LAID RADIALLY, USE 1 OR 2 PRECAST COLLARS OR BRICK AS REQUIRED. (4" BRICK MIN. ONLY FOR SHALLOW MANHOLE CONSTRUCTION.)

NOTE 'B':

ALTERNATE LOOSE BOTTOM SLAB TO BE USED ONLY IN SHALLOW MANHOLE CONSTRUCTION. A SHALLOW MANHOLE IS A MANHOLE ON A SEWER WHICH HAS A COVER FROM FINAL GRADE TO THE OUTER TOP OF THE PIPE OF LESS THAN 4'-0". MINIMUM HEADROOM FOR SHALLOW MANHOLE SHALL BE 1'-0".

NOTE 'C':

PIPE OPENINGS WILL NOT BE PERMITTED THROUGH JOINTS. DISTANCE FROM TOP OR BOTTOM OF ANY SECTION SHALL BE A MINIMUM OF 3" PLUS THE JOINT DEPTH FOR CAST PIPE OPENINGS AND A MINIMUM OF 12" PLUS THE JOINT DEPTH FOR CORED OPENINGS FOR BASIN CONNECTIONS.

NOTE 'D':

THE MANUFACTURER SHALL ENSURE THAT ALL PRECAST MANHOLE SECTIONS ARE ADDITIONALLY REINFORCED WHERE REQUIRED TO RESIST DAMAGE FROM HANDLING, SHIPPING AND INSTALLATION STRESSES.

SCHEDULE
(6'-0" DIA. PRECAST MANHOLE)

PIPE DIA.	OPENING*	Δ MAX.
18"	26"	106°
24"	34"	90°
30"	42"	77°
36"	49"	67°
42"	56"	58°
48"	63"	38°

* SEE NOTE 11

SCHEDULE
(7'-0" DIA. PRECAST MANHOLE)

PIPE DIA.	OPENING*	Δ MAX.
18"	26"	114°
24"	34"	98°
30"	42"	86°
36"	49"	75°
42"	56"	67°
48"	63"	60°
54"	71"	48°

* SEE NOTE 11

SCHEDULE
(8'-0" DIA. PRECAST MANHOLE)

PIPE DIA.	OPENING*	Δ MAX.
24"	34"	106°
30"	42"	93°
36"	49"	83°
42"	56"	74°
48"	63"	67°
54"	71"	61°
60"	78"	56°
66"	85"	41°

* SEE NOTE 11

SCHEDULE
(10'-0" DIA. PRECAST MANHOLE)

PIPE DIA.	OPENING*	Δ MAX.
36"	49"	96°
42"	56"	87°
48"	63"	79°
54"	71"	73°
60"	78"	67°
66"	85"	62°
72"	92"	58°
78"	99"	54°
84"	106"	44°

* SEE NOTE 11

GENERAL NOTES:

(1) THESE PRECAST MANHOLE MAY BE SUBSTITUTED FOR STANDARD MANHOLE TYPES A-1, A-2, B-1, B-2, C-1, C-2, D-1 AND D-2 ON SEWERS 84" IN DIAMETER AND LESS ONLY (AS SHOWN IN SCHEDULES).

(2) MANHOLE RISER REINFORCING COMPLIES WITH AREA REQUIREMENTS OF ASTM C478, EXCEPT THAT ALL WALL SECTIONS SHALL BE REINFORCED WITH WWM, AS=(SEE CHART A - DWG. 4 OF 4) E.F. WITH 2-#4 HOOPS AROUND ALL CAST PIPE OPENINGS (1-E.F.). (THE 2-#4 HOOPS WILL NOT BE REQUIRED AT CORED OPENINGS FOR BASIN CONNECTIONS.) (ALL VALUES OF AREA OF STEEL (AS) ARE IN SQUARE INCHES AND ARE A MINIMUM.)

(3) CORED OPENINGS WILL BE PERMITTED FOR 12" DIA. BASIN CONNECTIONS ONLY. THE MAXIMUM CORED OPENING SHALL BE 16" FOR THESE BASIN CONNECTIONS.

(4) FOR DETAILS OF STEPS, JOINTS, GASKETS, PRECAST COLLARS, PIPE TO MANHOLE CONNECTIONS, PILE CAP, POURED IN PLACE ALTERNATE MONOLITHIC BASE SECTIONS AND 4'-0" DIA. PRECAST MANHOLE UNITS SEE STANDARD FOR PRECAST MANHOLE DETAILS, STD. FOR M.H. STEPS AND STD. FOR ALTERNATE MONOLITHIC BASE SECTIONS FOR PRECAST MANHOLES (POURED IN PLACE).

(5) THE MAXIMUM DEPTH OF COVER OF THE 6'-0", 7'-0", 8'-0" AND 10'-0" DIA. PRECAST MANHOLES, FROM FINAL GRADE TO THE OUTER TOP OF THE PIPE, SHALL BE TWENTY FIVE (25) FEET.

(6) ALL COVER DISTANCES SHOWN FOR REINFORCEMENT ARE CLEAR DISTANCES.

(7) LIFTING HOLES SHALL BE LOCATED IN THE SECTIONS AS PER MANUFACTURER'S RECOMMENDATIONS AND GROUTED PRIOR TO BACKFILLING.

(8) THE VALUES OF THE WALL AND SLAB THICKNESSES ARE A MINIMUM.

(9) CONCRETE DESIGN MIX = 5,000 PSI (MIN. 28 DAY STRENGTH = 4,000 PSI; MAX. W/C = 0.47). REBARS - FS = 60,000 PSI. WWM - FS = 65,000 PSI.

(10) INVERT SHELVES SHALL HAVE A 1/2" PER LINEAR FOOT PITCH TOWARDS THE SEWER.

(11) THE OPENING DIAMETERS SHOWN IN THE SCHEDULE ARE MAXIMUM VALUES. THE MINIMUM OPENING DIAMETERS SHALL BE AS FOLLOWS: 8" TO 24" DIA. PIPES = O.D.+3"; 30" TO 36" DIA. PIPES = O.D.+4" AND 54" TO 8" DIA. PIPES = O.D.+5".

(12) BELL-UP TYPE JOINTS SHALL BE ALLOWED FOR 6'-0", 7'-0", 8'-0" AND 10'-0" DIA. PRECAST MANHOLE, WITH THE FOLLOWING MODIFICATION TO THE LOOSE TOP SLAB: (A) THE MINIMUM SLAB THICKNESS SHALL BE X+6" (WHERE 'X' IS JOINT DEPTH), BUT IN NO CASE SHALL IT BE LESS THAN 10" THICK AND (B) THE EMBEDMENT LENGTH SHALL BE T-1" (WHERE T IS THE THICKNESS OF RISER WALL); SEE DETAIL "A" ON DRAWING 30B.

Peter W. Lawson P.E.
ASSISTANT COMMISSIONER, DESIGN
DEPARTMENT OF DESIGN AND CONSTRUCTION

7/9/07
DATE

Vincenzo di Tana P.E.
DIRECTOR OF ENGINEERING
DEPARTMENT OF ENVIRONMENTAL PROTECTION

8/10/07
DATE

REVISED AUGUST 2004: S. MELAMED

SE30D

CITY OF NEW YORK
DEPARTMENT OF ENVIRONMENTAL PROTECTION

SE30D

STANDARD FOR PRECAST MANHOLE (DWG. 4 OF 4)

(FOR 6'-0", 7'-0", 8'-0" AND 10'-0" DIA. PRECAST MANHOLES)

CHART A

d	D	t	H		AS	E	F	h
			MONOLITHIC BASE SECTION	ALTERNATE RISER SECTION				
6'-0"	7'-2"	7"	11'-6" MAX.; 3'-5" MIN.	7'-4" MAX.; 3'-5" MIN.	0.18 X 0.09	#4	#5@12"	15" TO 18"
7'-0"	8'-4"	8"	11'-6" MAX.; 3'-5" MIN.	7'-11" MAX.; 3'-5" MIN.	0.21 X 0.10	#4	#6@12"	15" TO 18"
8'-0"	9'-6"	9"	11'-6" MAX.; 4'-1" MIN.	9'-1" MAX.; 4'-1" MIN.	0.24 X 0.12	#5	#6@9"	15" TO 20"
10'-0"	11'-10"	11"	11'-6" MAX.; 5'-4" MIN.	10'-10" MAX.; 5'-0" MIN.	0.30 X 0.15	#6	#7@8"	15" TO 20"

CHART B

d	DOWELS IN MONOLITHIC TOP SECTION		DOWELS IN MONOLITHIC BASE SECTION
	2'-3" OPENING	4'-0" OPENING	
6'-0"	19-#5 DOWELS @12" O.C. (17@23"V x 32"H) (2@23"V x 10"H)	15-#5 DOWELS @12" O.C. (3@23"V x 25"H); (4@23"V x 23"H) (2@23"V x 20"H); (2@23"V x 17"H) (2@23"V x 13"H); (2@23"V x 9"H)	15-#5 DOWELS @17" O.C. (32"V x 32"H)
7'-0"	23-#5 DOWELS @12" O.C. (21@23"V x 38"H) (2@23"V x 10"H)	19-#5 DOWELS @12" O.C. (5@23"V x 38"H); (4@23"V x 35"H) (2@23"V x 31"H); (2@23"V x 28"H) (2@23"V x 23"H); (2@23"V x 17"H) (2@23"V x 12"H)	20-#6 DOWELS @15" O.C. (38"V x 38"H)
8'-0"	27-#6 DOWELS @12" O.C. (25@23"V x 40"H) (2@23"V x 10"H)	23-#6 DOWELS @12" O.C. (15@23"V x 40"H); (2@23"V x 35"H) (2@23"V x 28"H); (2@23"V x 20"H) (2@23"V x 14"H)	25-#6 DOWELS @13 3/4" O.C. (40"V x 40"H)
10'-0"	33-#7 DOWELS @12" O.C. (33@23"V x 46"H)	31-#7 DOWELS @12" O.C. (25@23"V x 46"H); (2@23"V x 40"H) (2@23"V x 25"H); (2@23"V x 16"H)	34-#7 DOWELS @12 3/4" O.C. (46"V x 46"H)

Gregg W. Carar P.E.
ASSISTANT COMMISSIONER, DESIGN
DEPARTMENT OF DESIGN AND CONSTRUCTION

7/9/07
DATE

Magdi Farag P.E.
DIRECTOR OF ENGINEERING
DEPARTMENT OF ENVIRONMENTAL PROTECTION

8/10/07
DATE

REVISED AUGUST 2004: S. MELAMED

SE31A

CITY OF NEW YORK
DEPARTMENT OF ENVIRONMENTAL PROTECTION

SE31A

STANDARD FOR PRECAST MANHOLE DETAILS (DWG. 1 OF 3)

(PIPE TO MANHOLE CONNECTION DETAILS)

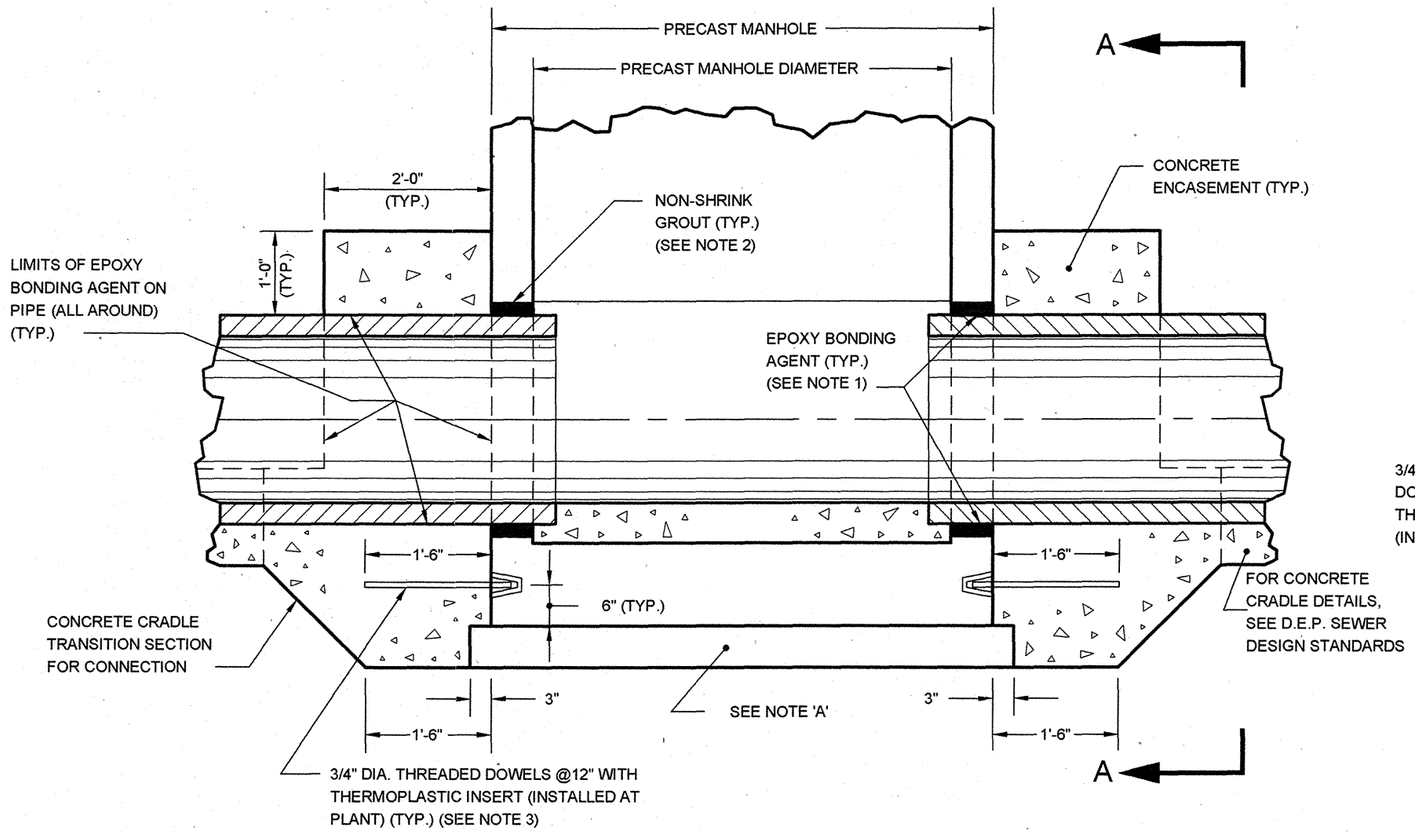

SECTIONAL PROFILE

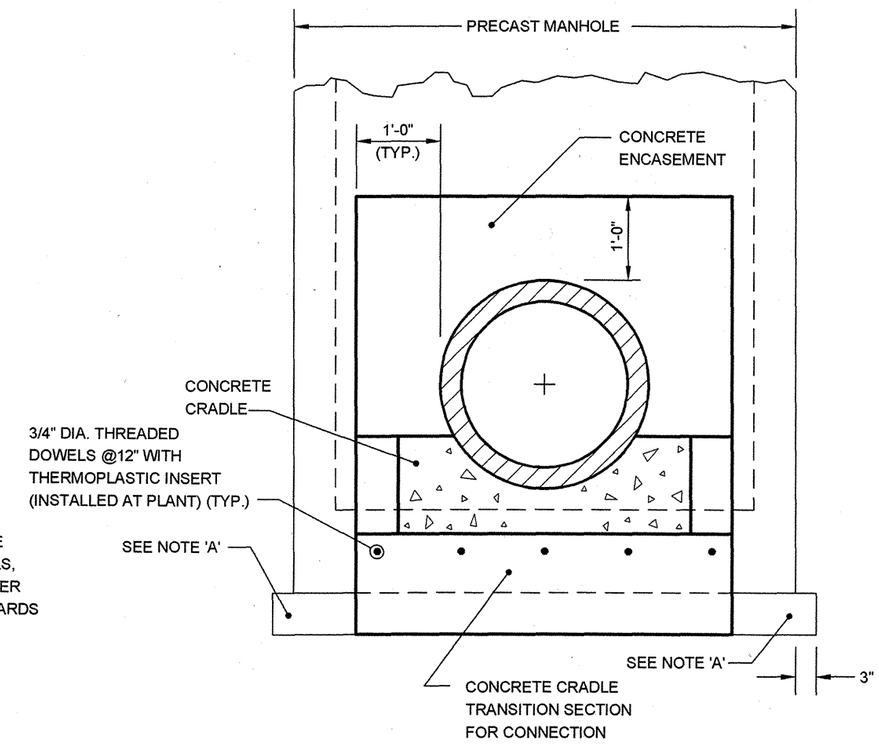

SECTION A-A

NOTE 'A':

LEVELING PAD AND/OR PILE CAP - FOR MH'S ON GRADE, USE 6" WELL COMPACTED STONE BALLAST. FOR MH'S ON PILES, USE A CLASS 40 REINFORCED CONCRETE PILE CAP AS SHOWN ON THE STANDARD FOR PRECAST MANHOLE DETAILS DWG. 3 OF 3. IN EACH CASE, THE SHAPE SHALL BE SQUARE AND 3" LARGER THAN THE O.D. OF THE STRUCTURE, UNLESS OTHERWISE SPECIFIED.

GENERAL NOTES:

(1) EPOXY BONDING AGENT TO BE ROCKWELL 'C' AS MANUFACTURED BY PRECO CHEMICAL CO. OR EQUAL.

(2) NON-SHRINK GROUT TO BE SIKA-SET MORTAR AS MANUFACTURED BY SIKA CO. OR EQUAL.

(3) THERMOPLASTIC INSERT AS MANUFACTURED BY PENNSYLVANIA INSERT CORP. OR EQUAL.

George W. Carver P.E.
ASSISTANT COMMISSIONER, DESIGN
DEPARTMENT OF DESIGN AND CONSTRUCTION

7/9/07
DATE

Magdi Farag P.E.
DIRECTOR OF ENGINEERING
DEPARTMENT OF ENVIRONMENTAL PROTECTION

8/10/07
DATE

REVISED SEPTEMBER 2004: A. KHAN

SE31B

CITY OF NEW YORK
DEPARTMENT OF ENVIRONMENTAL PROTECTION

SE31B

STANDARD FOR PRECAST MANHOLE DETAILS (DWG. 2 OF 3)

(JOINTS, GASKETS AND PRECAST COLLAR DETAILS)

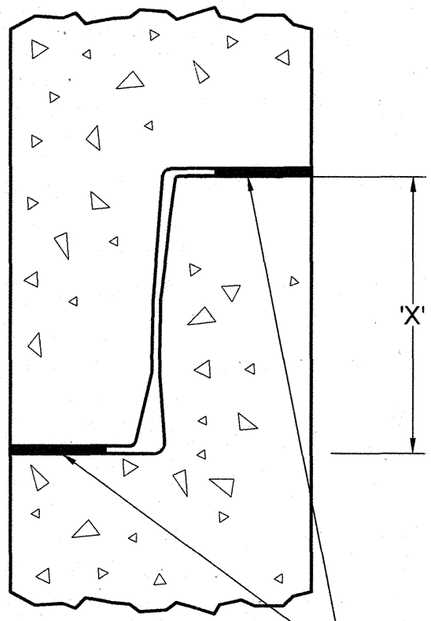

7/8" X 7/8" OR 1" DIA. SELF SEALING BUTYL GASKET. QUALITY EQUAL TO FEDERAL SPEC. #SS-S-00210 (TYP.)

BUTYL JOINT

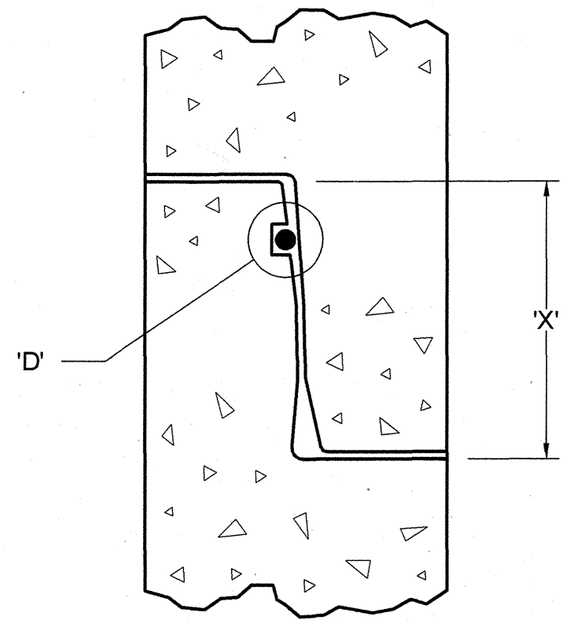

'O' RING JOINT

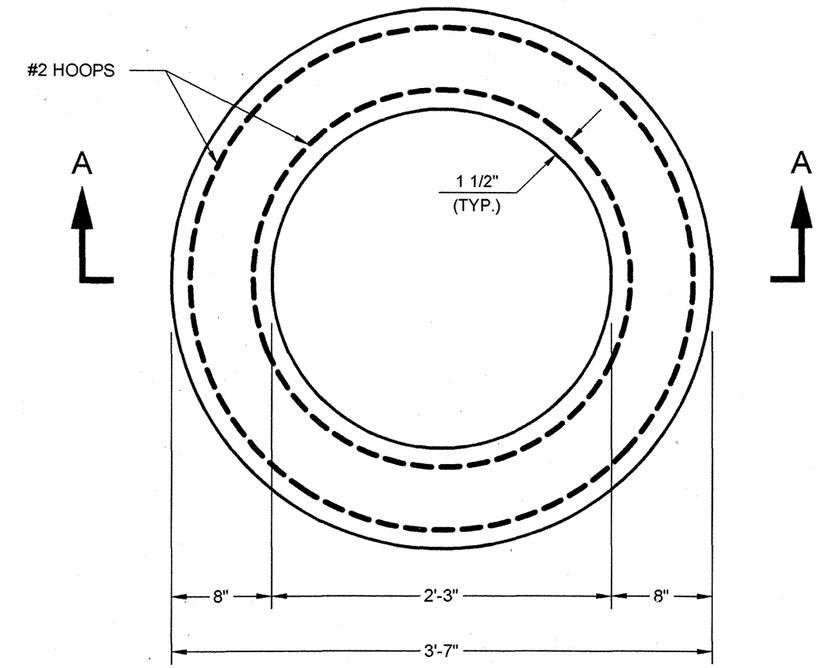

PLAN OF 6"H X 8"W PRECAST COLLAR

JOINT DETAILS		
M.H. I.D.	'X'	'D'
4'-0"	3" TO 5"	5/8" DIA.
5'-0"	3" TO 5"	3/4" DIA.
6'-0" AND 7'-0"	3" TO 6"	3/4" DIA.
8'-0" AND 10'-0"	3" TO 8"	3/4" DIA.

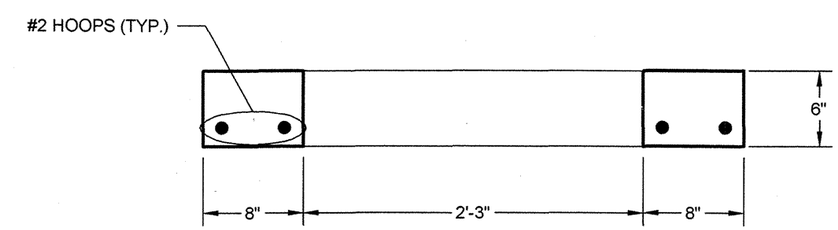

SECTION A-A

REVISED SEPTEMBER 2004: L. ADRIEN

P.E.
ASSISTANT COMMISSIONER, DESIGN
DEPARTMENT OF DESIGN AND CONSTRUCTION

7/9/07
DATE

P.E.
DIRECTOR OF ENGINEERING
DEPARTMENT OF ENVIRONMENTAL PROTECTION

8/10/07
DATE

SE31C

CITY OF NEW YORK
DEPARTMENT OF ENVIRONMENTAL PROTECTION

SE31C

STANDARD FOR PRECAST MANHOLE DETAILS (DWG. 3 OF 3)

(PRECAST MANHOLE PILE CAP DETAILS)

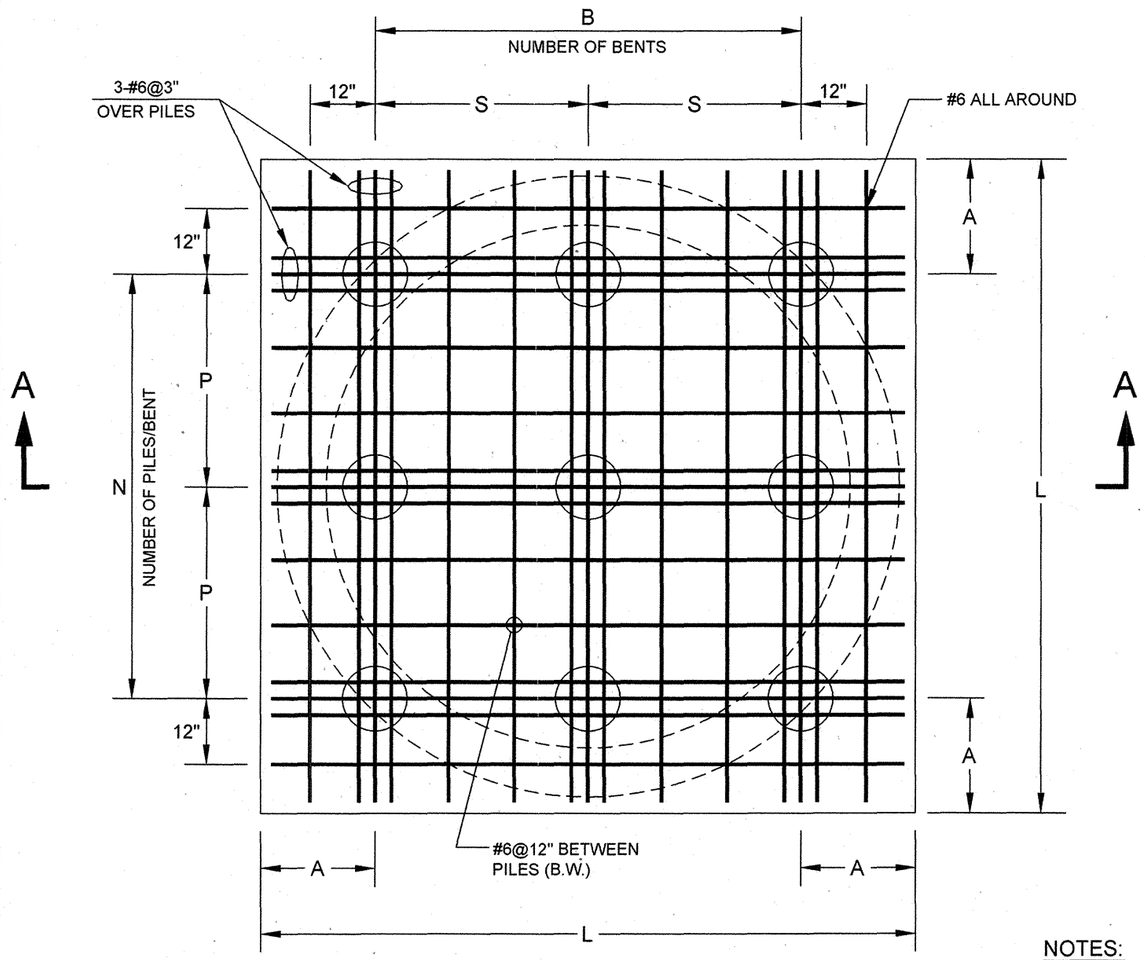

PILE PLAN

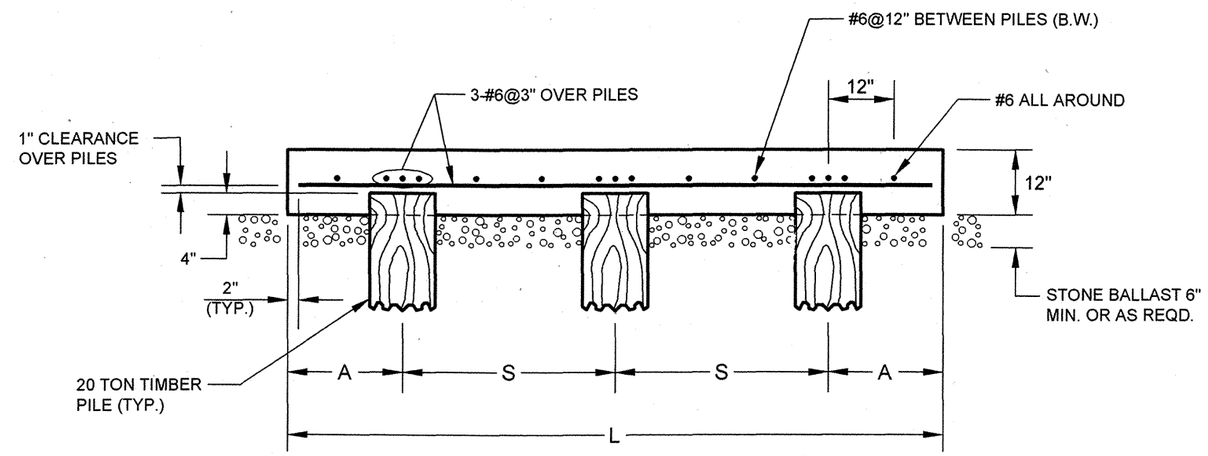

SECTION A-A

M.H. DIA.	L	A	N/B	P/S
4'-0"	5'-4"	15"	2	2'-10"
5'-0"	6'-6"	16"	2	3'-10"
6'-0"	7'-8"	17"	3	2'-5"
7'-0"	8'-10"	20"	3	2'-9"
8'-0"	10'-0"	21"	3	3'-3"
10'-0"	12'-4"	23"	4	2'-10"

NOTES:

(1) CONCRETE SHALL BE CLASS 40. STEEL REINFORCEMENT BARS SHALL BE GRADE 60.

(2) COST FOR ALL LABOR, MATERIAL, ETC. REQUIRED FOR THE PLACEMENT OF PILE CAP(S) SHALL BE MADE UNDER THE FOLLOWING CONTRACT ITEMS:
(A) ADDITIONAL EARTH EXCAVATION
(B) ADDITIONAL CONCRETE
(C) ADDITIONAL STEEL REINFORCING BARS
(D) STONE BALLAST

Gege W. Carver P.E. 7/9/07
ASSISTANT COMMISSIONER, DESIGN
DEPARTMENT OF DESIGN AND CONSTRUCTION
DATE

Mac di Tara P.E. 8/10/07
DIRECTOR OF ENGINEERING
DEPARTMENT OF ENVIRONMENTAL PROTECTION
DATE

REVISED OCTOBER 2004: C. A. NEVERSON

CITY OF NEW YORK
DEPARTMENT OF ENVIRONMENTAL PROTECTION

SE32

STANDARD FOR ALTERNATE MONOLITHIC BASE SECTION FOR PRECAST MANHOLES (POURED IN PLACE)

(FOR 4'-0", 5'-0", 6'-0", 7'-0", 8'-0" AND 10'-0" DIA. PRECAST MANHOLES)

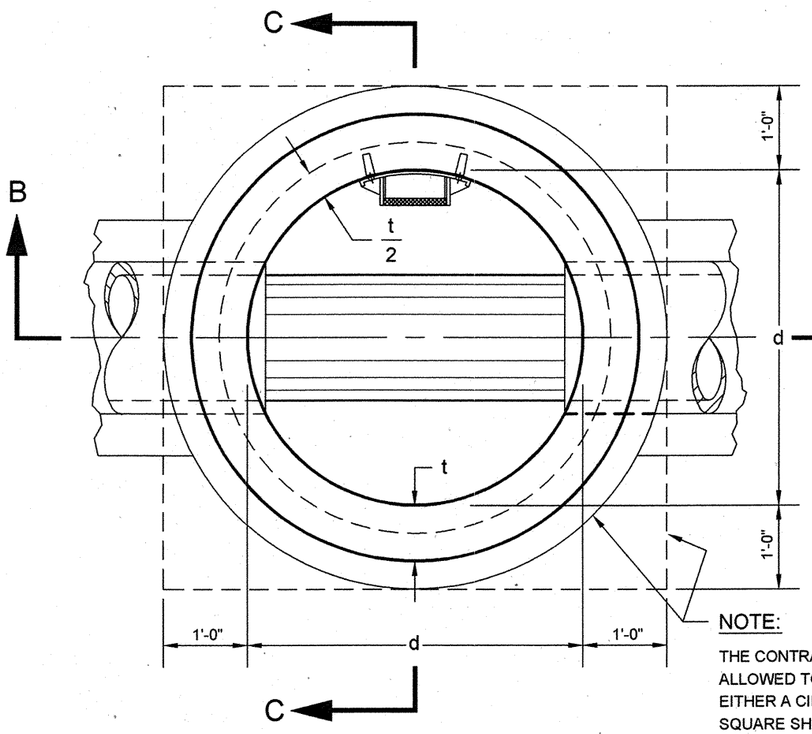

SECTION A-A

NOTE:

THE CONTRACTOR SHALL BE ALLOWED TO POUR IN PLACE EITHER A CIRCULAR OR SQUARE SHAPED OUTER WALL FOR THE ALTERNATE MONOLITHIC BASE SECTION.

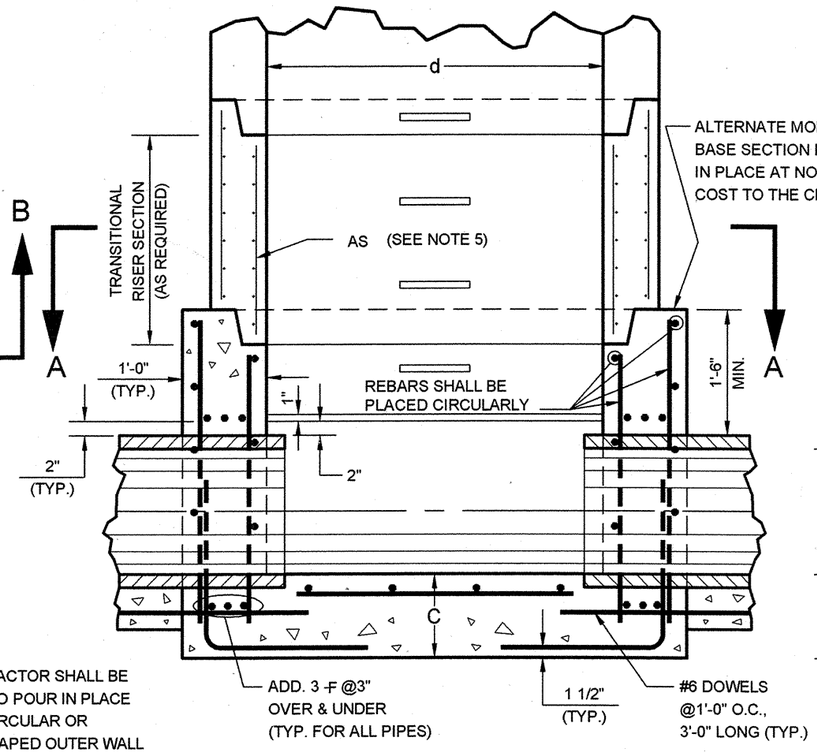

SECTION B-B

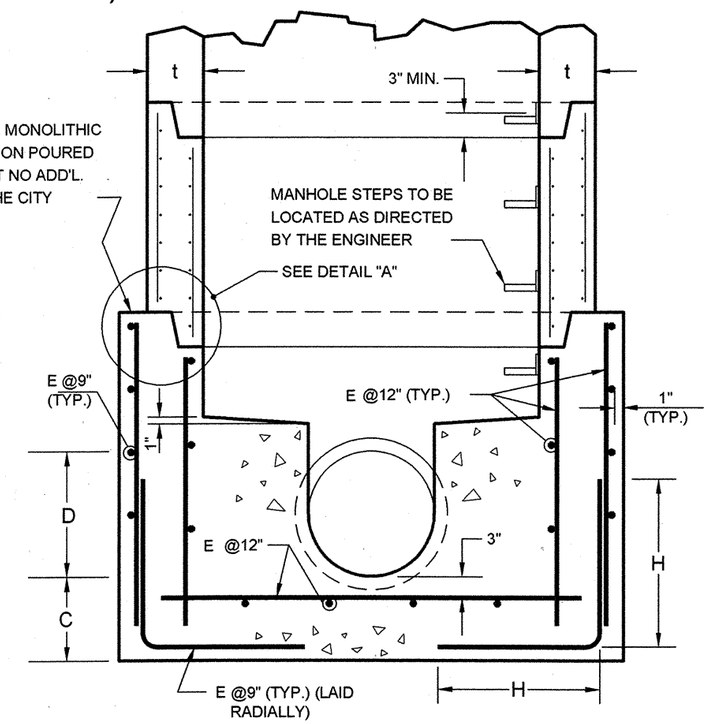

SECTION C-C

NOTES:

(1) ALL STEEL REINFORCEMENT SHALL BE AS SHOWN. COVER DISTANCES SHOWN ARE CLEAR DISTANCES.

(2) FOR ALTERNATE MONOLITHIC BASE SECTION ON PILES SEE PRECAST MANHOLE PILE CAP DETAILS OF STANDARD FOR PRECAST MANHOLE DETAILS DWG. 3 OF 3. ALL PILE CAP DIMENSIONS SHALL REMAIN THE SAME, WITH THE EXCEPTIONS OF DIMENSION "L" WHICH SHALL BE EQUAL TO THE DIMENSION OF THE ALTERNATE MONOLITHIC BASE SECTION AND DIMENSION "A" WHICH SHALL BE ADJUSTED ACCORDINGLY.

(3) CONCRETE SHALL BE CLASS 40. STEEL REINFORCEMENT BARS SHALL BE GRADE 60.

(4) INVERT SHELVES SHALL HAVE A 1/2" PER LINEAR FOOT PITCH TOWARDS THE SEWER.

(5) TRANSITIONAL RISER SECTION SHALL CONFORM TO ALL REQUIREMENTS OF THE STANDARDS FOR PRECAST MANHOLES.

d	t	X	C	E	F	H	AS
4'-0"	5"	3" TO 5"	12"	#4	#6	2'-0"	0.12 X 0.06
5'-0"	6"	3" TO 5"	12"	#4	#6	2'-3"	0.15 X 0.07
6'-0"	7"	3" TO 6"	14"	#4	#6	2'-6"	0.18 X 0.09
7'-0"	8"	3" TO 6"	15 1/2"	#5	#6	2'-9"	0.21 X 0.10
8'-0"	9"	3" TO 8"	18 1/2"	#5	#8	3'-0"	0.24 X 0.12
10'-0"	11"	3" TO 8"	23"	#5	#8	3'-6"	0.30 X 0.15

7/8"x7/8" OR 1" DIA. SELF SEALING BUTYL GASKET, QUALITY EQUAL TO FED. SPEC. #SS-S-00210

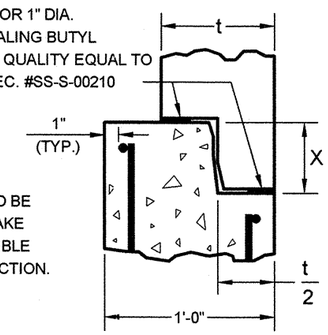

NOTE:

STEEL FORM TO BE UTILIZED TO MAKE JOINT COMPATIBLE WITH RISER SECTION.

DETAIL "A"

P.E.
ASSISTANT COMMISSIONER, DESIGN
DEPARTMENT OF DESIGN AND CONSTRUCTION

7/9/07
DATE

P.E.
DIRECTOR OF ENGINEERING
DEPARTMENT OF ENVIRONMENTAL PROTECTION

8/10/07
DATE

REVISED SEPTEMBER 2004: A. KHAN

CITY OF NEW YORK
DEPARTMENT OF ENVIRONMENTAL PROTECTION

SE33

STANDARD FOR PRECAST DROP PIPE MANHOLE (TYPE I)

(ON 10" DIA. TO 24" DIA. SEWERS)

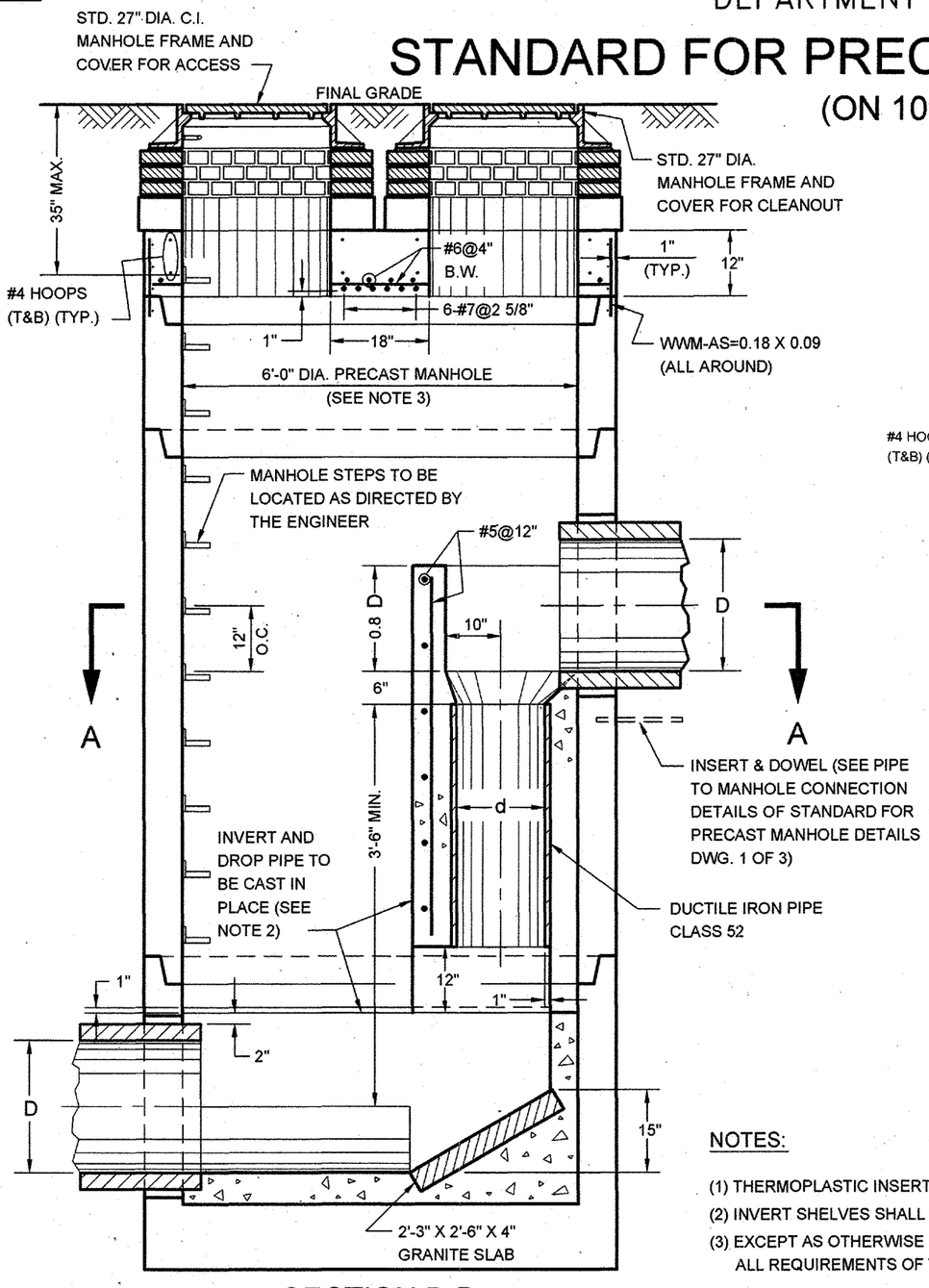

SECTION B-B

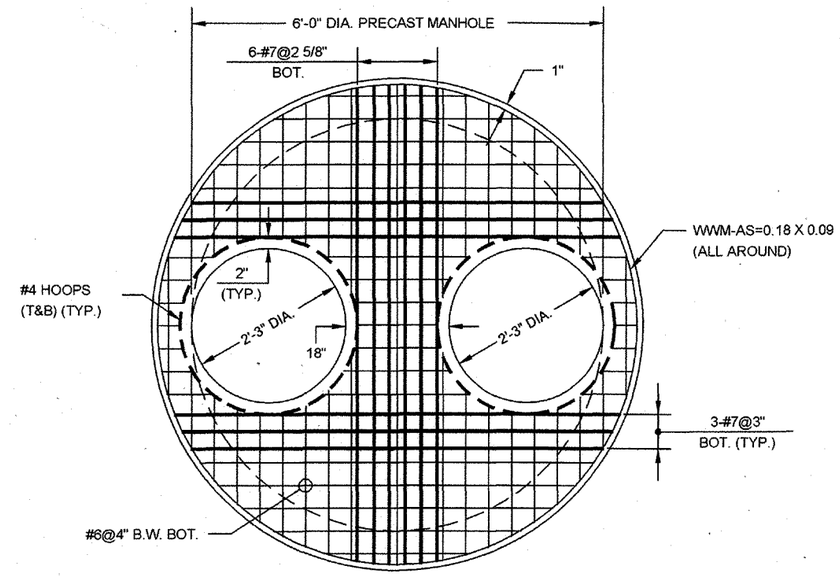

PLAN OF LOOSE TOP SLAB

D	10"	12"	15"	18"	24"
d	8"	10"	12"	14"	16"

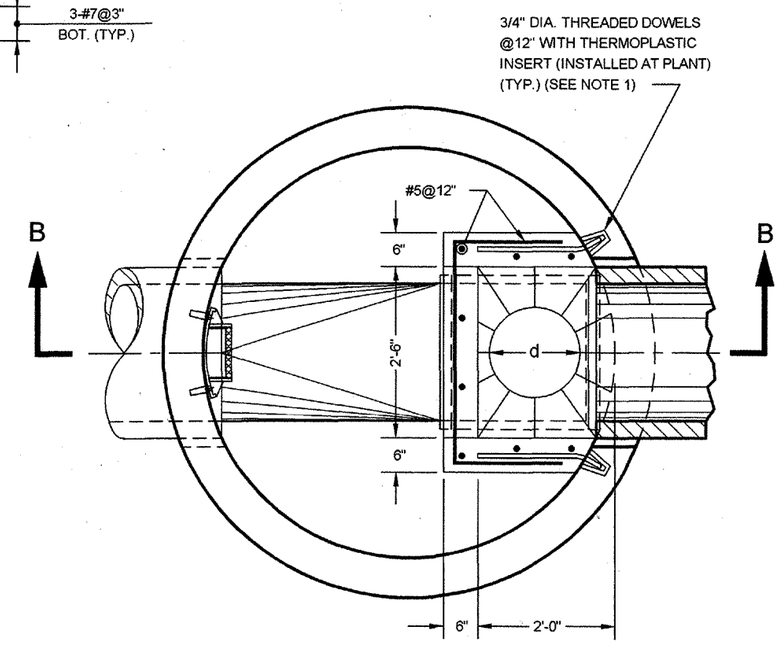

SECTION A-A

NOTES:

(1) THERMOPLASTIC INSERT AS MANUFACTURED BY PENNSYLVANIA INSERT CORP. OR EQUAL.

(2) INVERT SHELVES SHALL HAVE A 1/2" PER LINEAR FOOT PITCH TOWARDS THE SEWER.

(3) EXCEPT AS OTHERWISE SHOWN OR SPECIFIED THE PRECAST MANHOLE SHALL CONFORM TO ALL REQUIREMENTS OF THE STANDARD FOR 6'-0" TO 10'-0" DIA. PRECAST MANHOLES.

Peter W. Carson P.E.
ASSISTANT COMMISSIONER, DESIGN
DEPARTMENT OF DESIGN AND CONSTRUCTION

7/9/07
DATE

Magdi Farag P.E.
DIRECTOR OF ENGINEERING
DEPARTMENT OF ENVIRONMENTAL PROTECTION

8/10/07
DATE

REVISED DECEMBER 2006: L. ADRIEN

CITY OF NEW YORK
DEPARTMENT OF ENVIRONMENTAL PROTECTION

SE34

STANDARD FOR PRECAST DROP PIPE MANHOLE (TYPE II)

(FOR 10" DIA. TO 24" DIA. INCOMING DROP PIPE SEWERS)

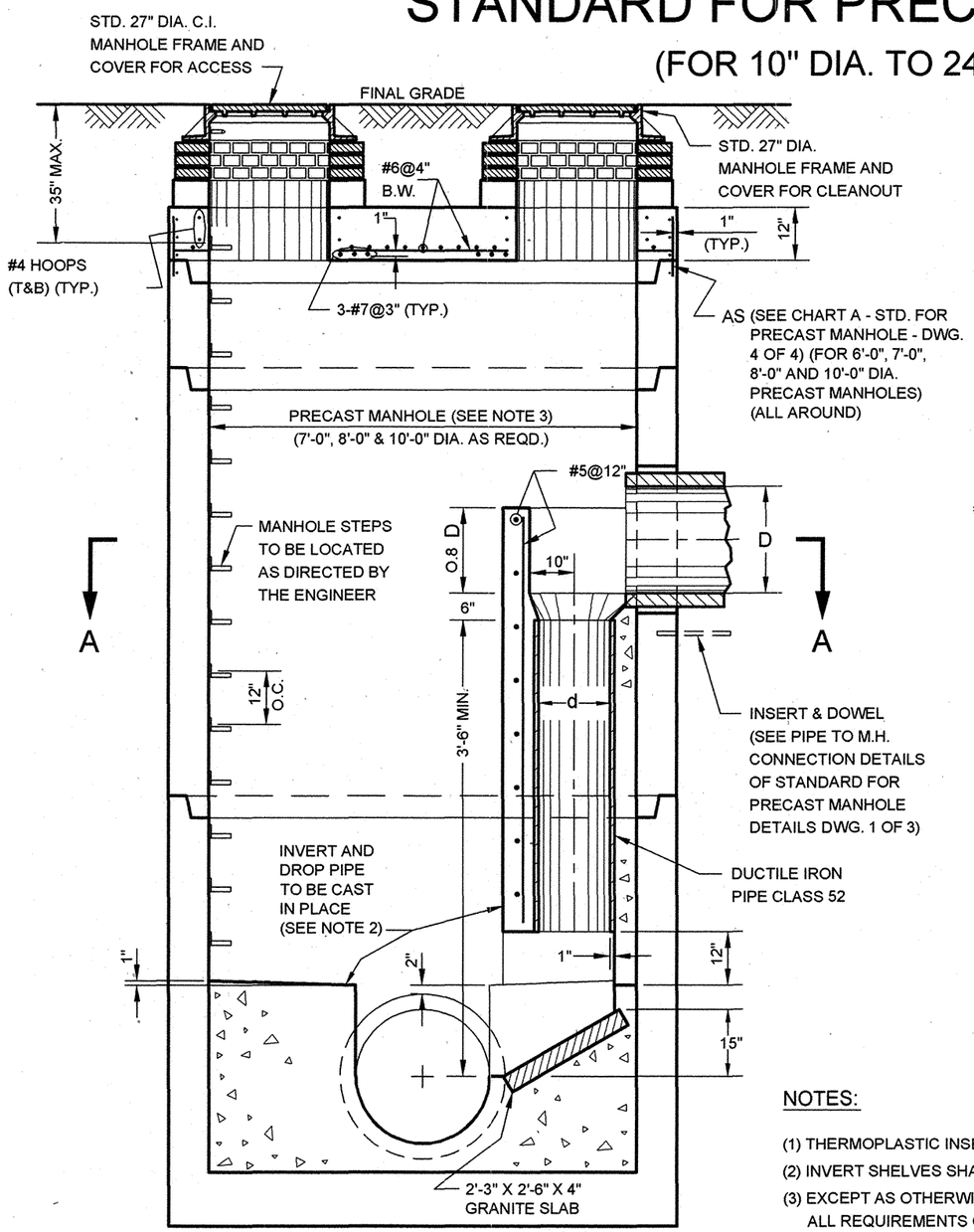

SECTION B-B

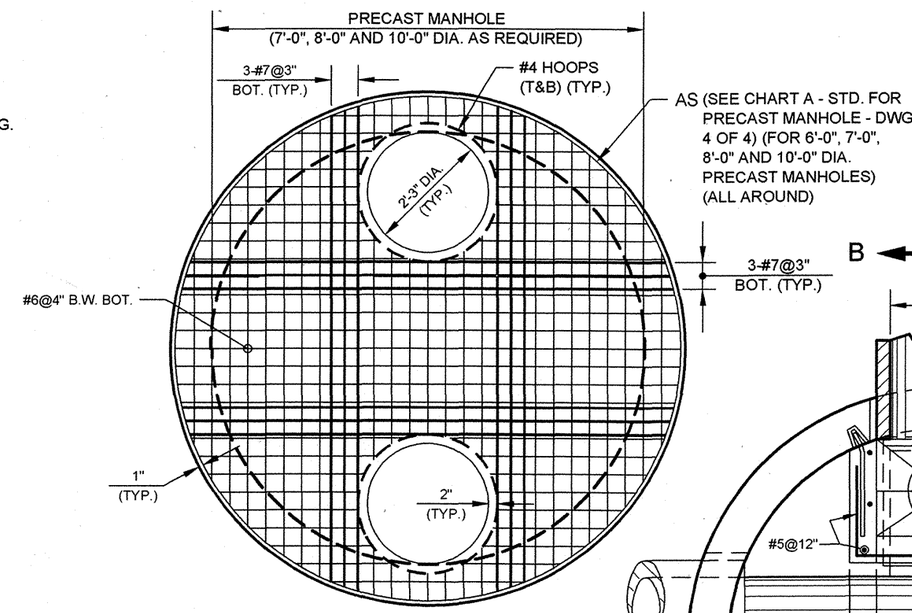

PLAN OF LOOSE TOP SLAB

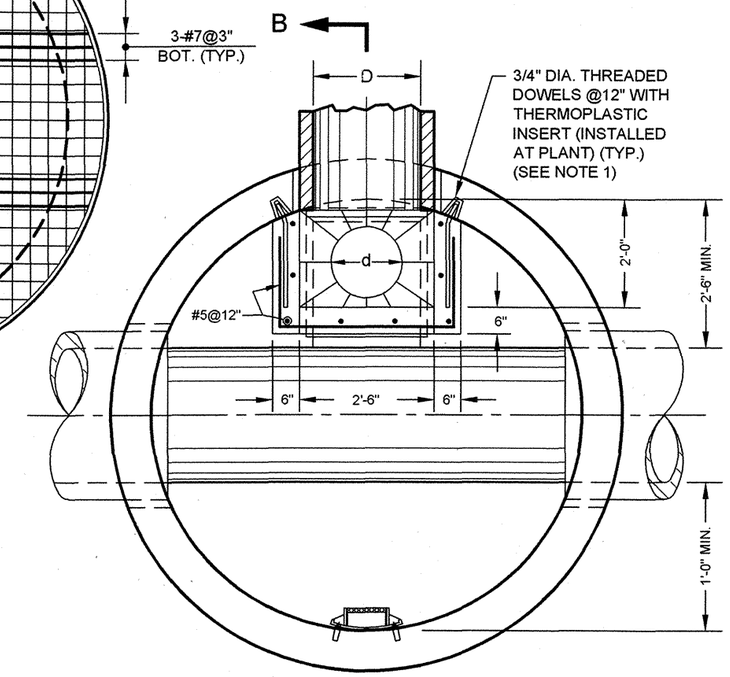

SECTION A-A

D	10"	12"	15"	18"	24"
d	8"	10"	12"	14"	16"

NOTES:

(1) THERMOPLASTIC INSERT AS MANUFACTURED BY PENNSYLVANIA INSERT CORP. OR EQUAL.
(2) INVERT SHELVES SHALL HAVE A 1/2" PER LINEAR FOOT PITCH TOWARDS THE SEWER.
(3) EXCEPT AS OTHERWISE SHOWN OR SPECIFIED THE PRECAST MANHOLE SHALL CONFORM TO ALL REQUIREMENTS OF THE STANDARD FOR 6'-0" TO 10'-0" DIA. PRECAST MANHOLES.

Peter W. Conan P.E.
ASSISTANT COMMISSIONER, DESIGN
DEPARTMENT OF DESIGN AND CONSTRUCTION

7/9/07
DATE

Magdi Farag P.E.
DIRECTOR OF ENGINEERING
DEPARTMENT OF ENVIRONMENTAL PROTECTION

8/10/07
DATE

REVISED DECEMBER 2006: L. ADRIEN

CITY OF NEW YORK
DEPARTMENT OF ENVIRONMENTAL PROTECTION

SE35

STANDARD FOR REMOVABLE PRECAST REINFORCED CONCRETE SLAB

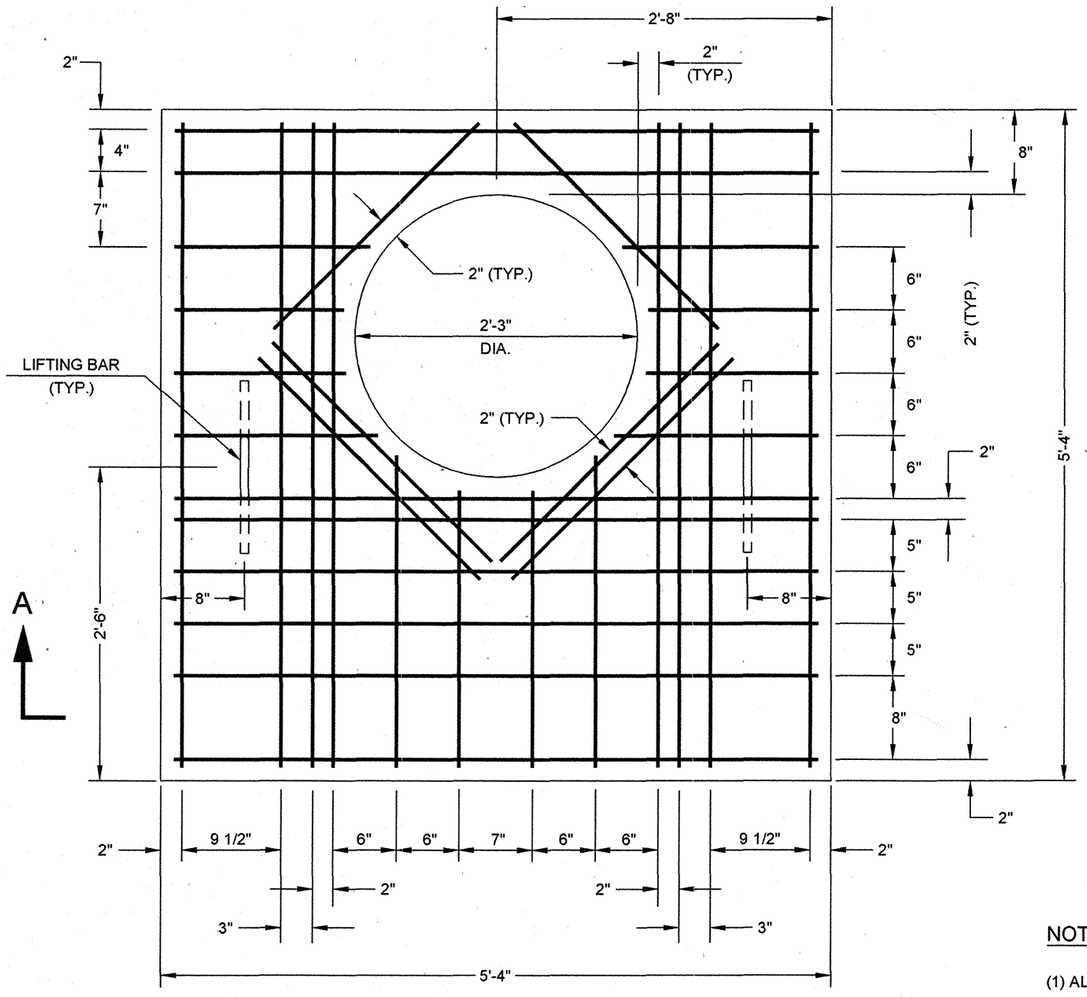

PLAN

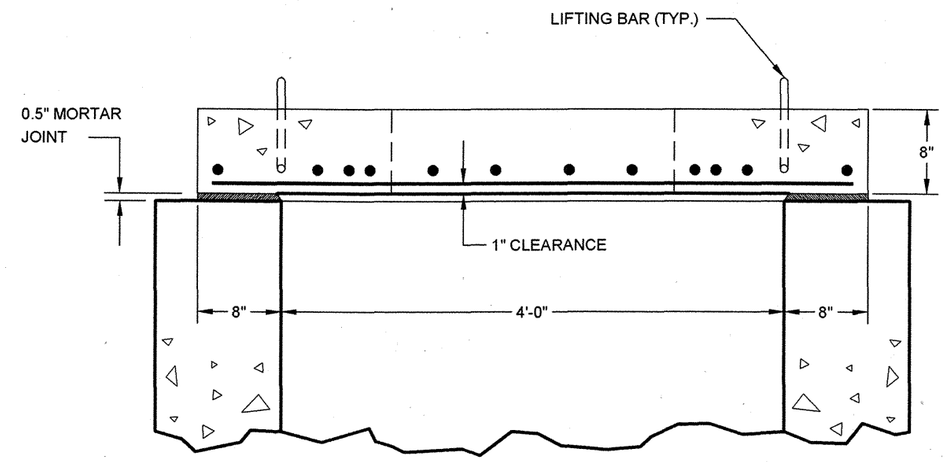

SECTION A-A

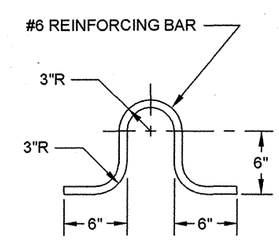

LIFTING BAR DETAIL

NOTES:

(1) ALL STEEL REINFORCEMENT ARE #6 BARS.

(2) CONCRETE IS TO BE CLASS 40. REBARS-GRADE 60.

Geoge W. Carson P.E. 7/9/07
ASSISTANT COMMISSIONER, DESIGN
DEPARTMENT OF DESIGN AND CONSTRUCTION
DATE

Maedi Farah P.E. 8/10/07
DIRECTOR OF ENGINEERING
DEPARTMENT OF ENVIRONMENTAL PROTECTION
DATE

REVISED SEPTEMBER 2004: L. ADRIEN

CITY OF NEW YORK
DEPARTMENT OF ENVIRONMENTAL PROTECTION

SE36

STANDARD FOR REMOVABLE PRECAST REINFORCED CONCRETE SLAB FOR DROP PIPE MANHOLE (TYPE I)

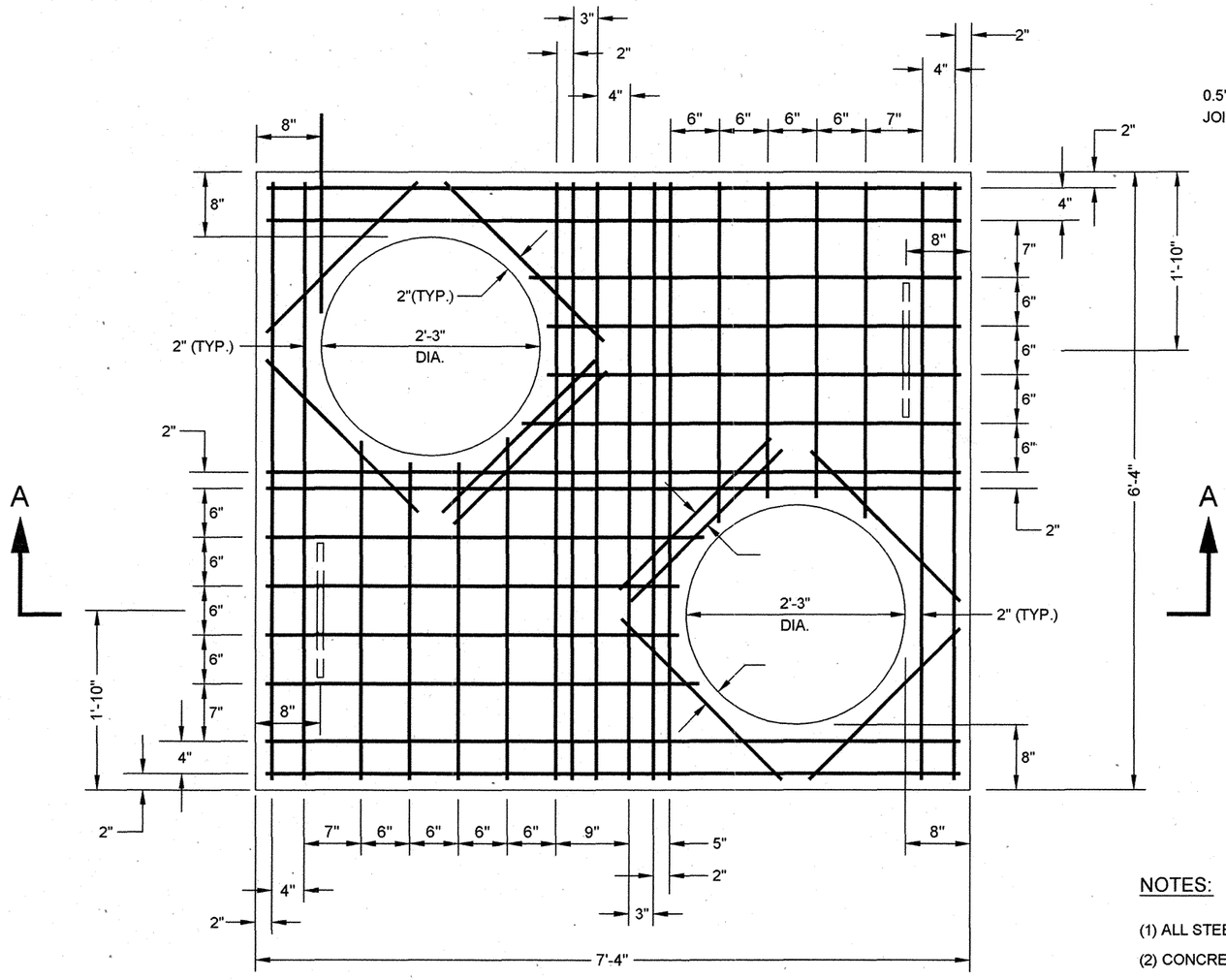

PLAN

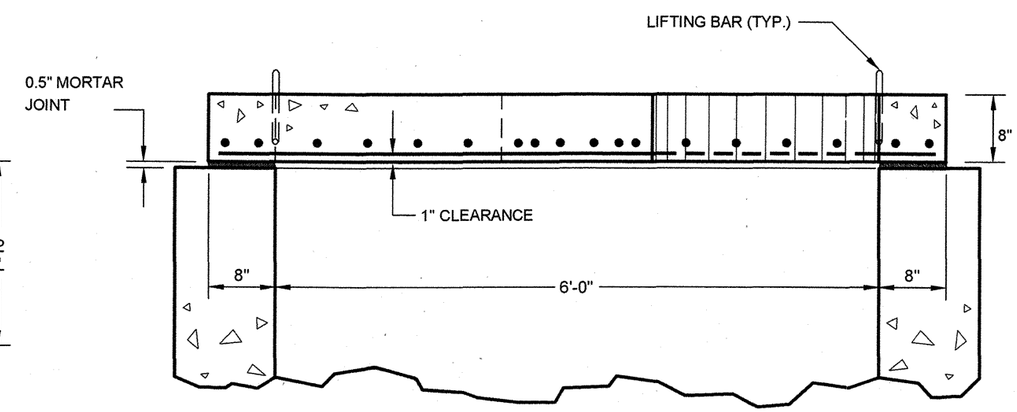

SECTION A-A

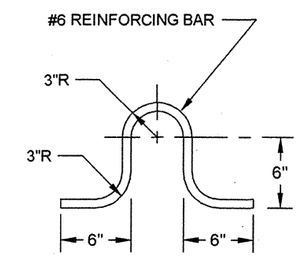

LIFTING BAR DETAIL

NOTES:

(1) ALL STEEL REINFORCEMENT ARE #6 BARS.

(2) CONCRETE IS TO BE CLASS 40. REBARS-GRADE 60.

Greg W. Carver P.E.
ASSISTANT COMMISSIONER, DESIGN
DEPARTMENT OF DESIGN AND CONSTRUCTION

7/9/07
DATE

Maedi Pana P.E.
DIRECTOR OF ENGINEERING
DEPARTMENT OF ENVIRONMENTAL PROTECTION

8/10/07
DATE

REVISED OCTOBER 2004: L. ADRIEN

CITY OF NEW YORK
DEPARTMENT OF ENVIRONMENTAL PROTECTION

SE37

STANDARD FOR REMOVABLE PRECAST REINFORCED CONCRETE SLAB FOR DROP PIPE MANHOLE (TYPE II)

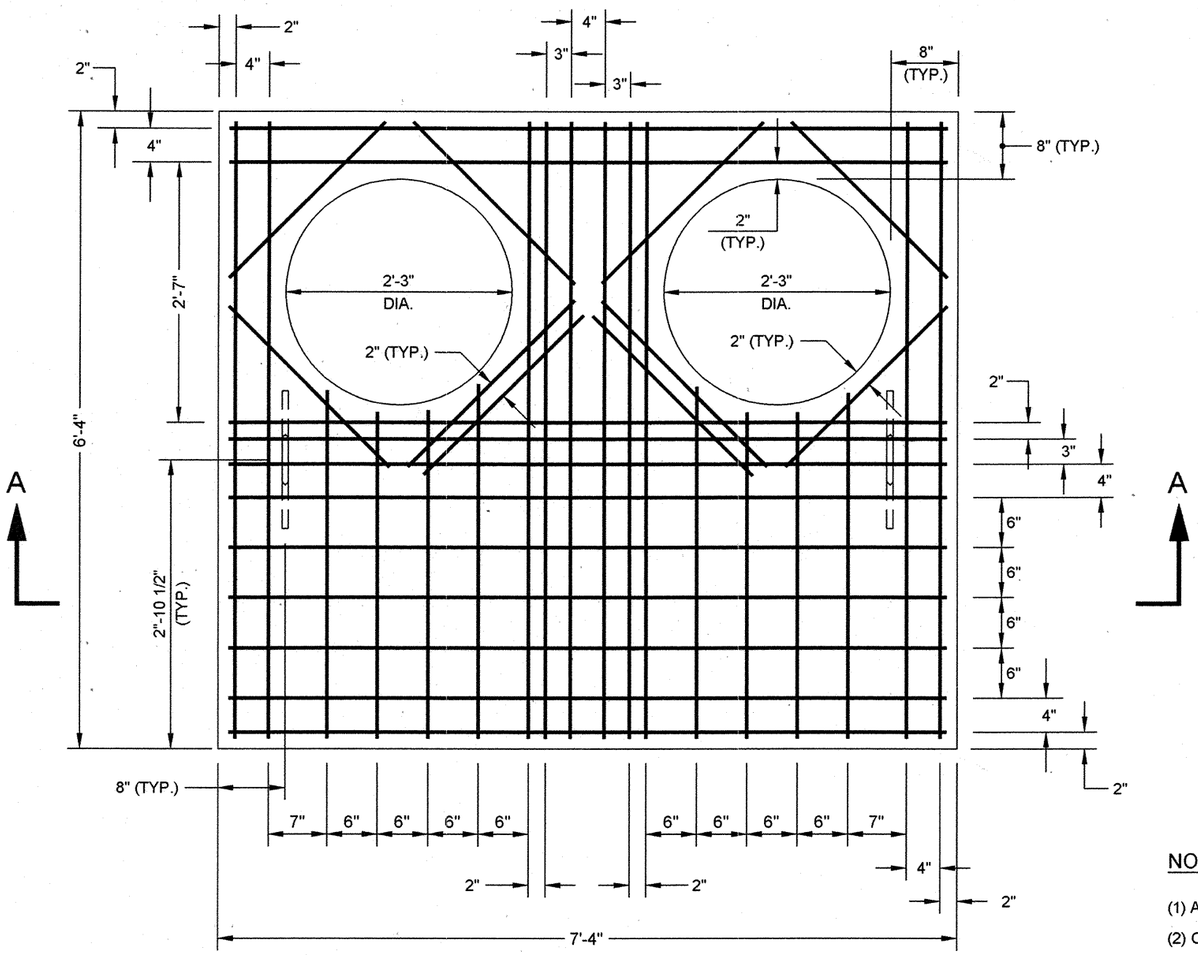

PLAN

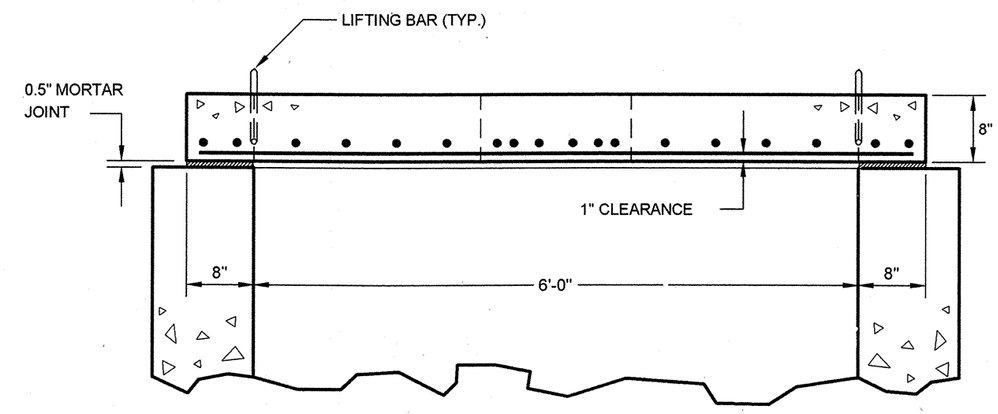

SECTION A-A

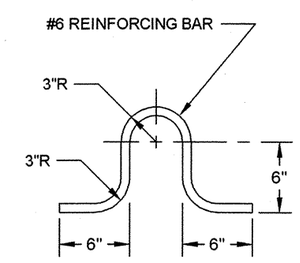

LIFTING BAR DETAIL

NOTES:

(1) ALL STEEL REINFORCEMENT ARE #6 BARS.

(2) CONCRETE IS TO BE CLASS 40. REBARS-GRADE 60.

REVISED OCTOBER 2004: L. ADRIEN

P.E.
ASSISTANT COMMISSIONER, DESIGN
DEPARTMENT OF DESIGN AND CONSTRUCTION

7/9/07
DATE

P.E.
DIRECTOR OF ENGINEERING
DEPARTMENT OF ENVIRONMENTAL PROTECTION

8/10/07
DATE

SE38

CITY OF NEW YORK
DEPARTMENT OF ENVIRONMENTAL PROTECTION

SE38

STANDARD FOR MANHOLE CHIMNEY DETAIL

(WHEN FINAL GRADE IS ABOVE LEGAL GRADE)

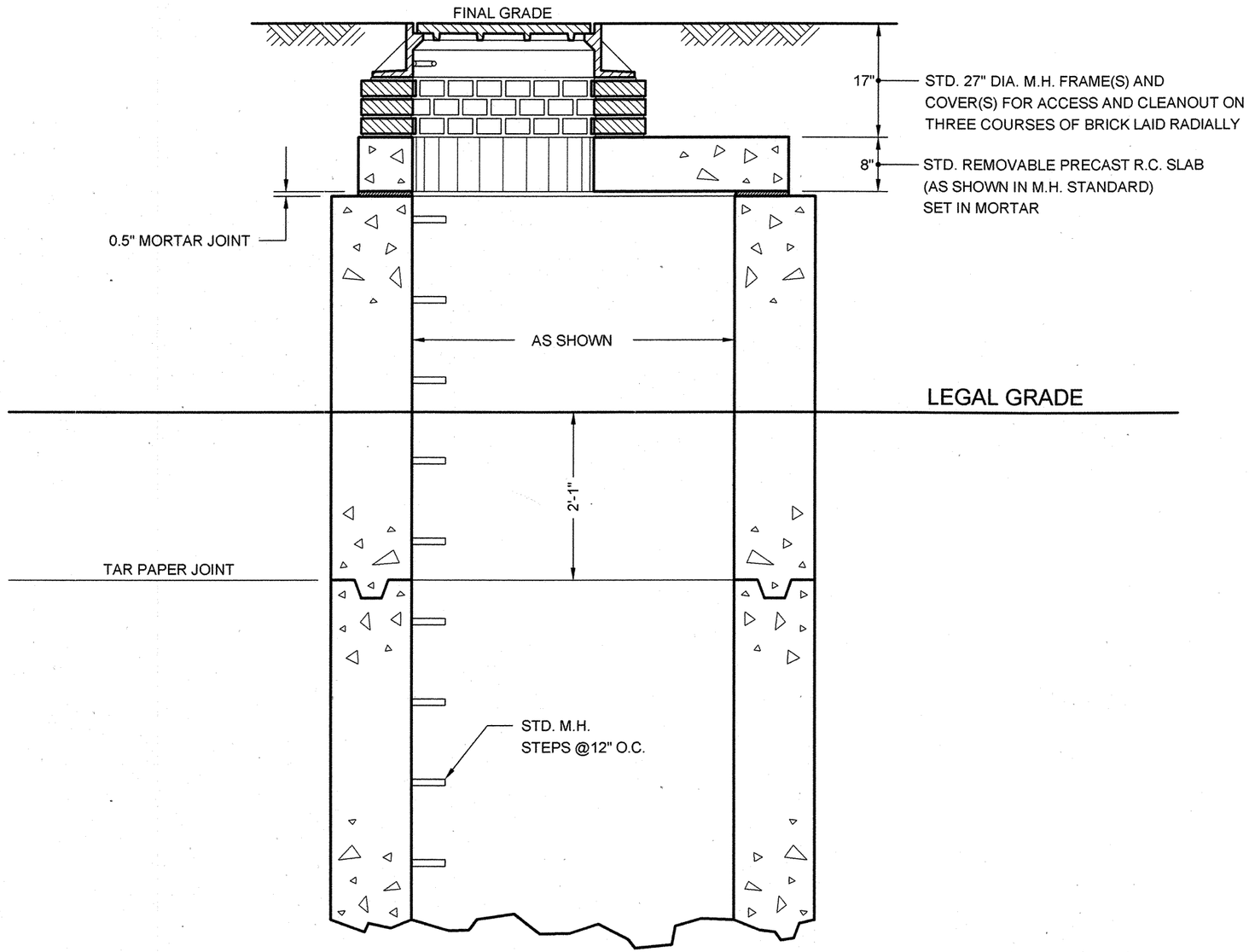

STANDARD SQUARE MANHOLE CHIMNEY

Gegl W. Carar P.E.
ASSISTANT COMMISSIONER, DESIGN
DEPARTMENT OF DESIGN AND CONSTRUCTION

7/9/07
DATE

Mario di Tarano P.E.
DIRECTOR OF ENGINEERING
DEPARTMENT OF ENVIRONMENTAL PROTECTION

8/10/07
DATE

REVISED OCTOBER 2004: L. ADRIEN

CITY OF NEW YORK
DEPARTMENT OF ENVIRONMENTAL PROTECTION

STANDARD FOR 27" DIAMETER CAST IRON MANHOLE FRAME AND COVER

(FOR ACCESS OR CLEANOUT)

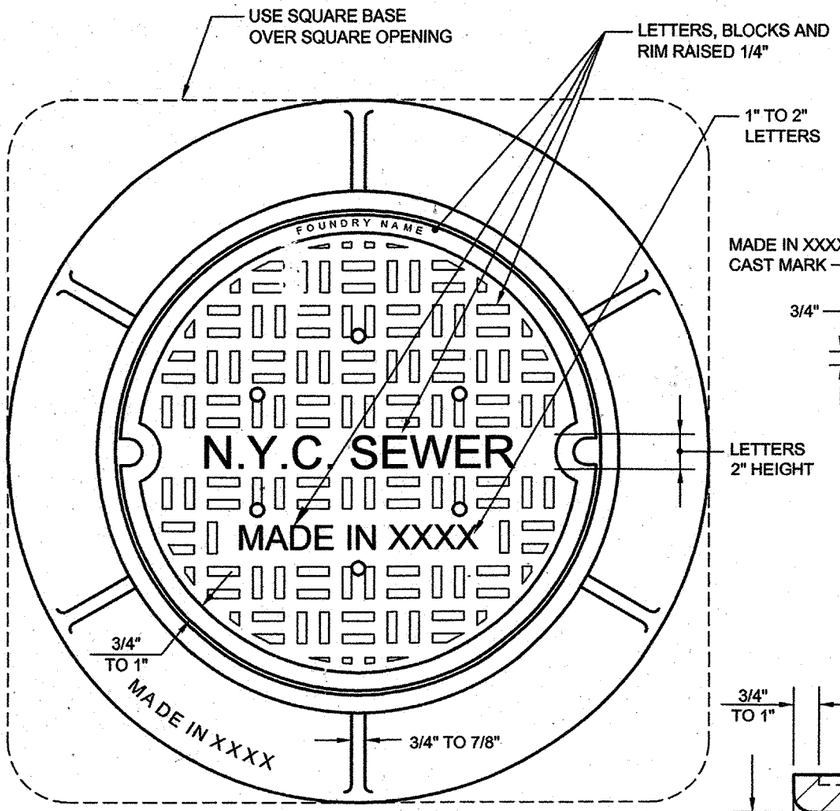

PLAN VIEW OF FRAME AND COVER

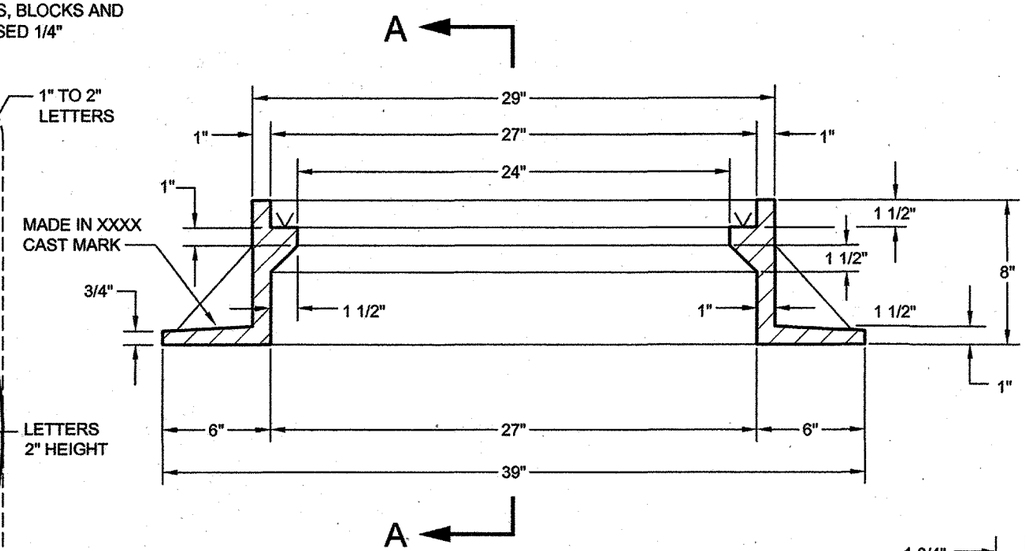

SECTION OF FRAME

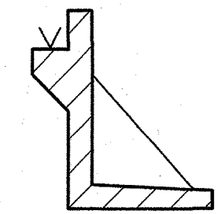

SECTION A-A

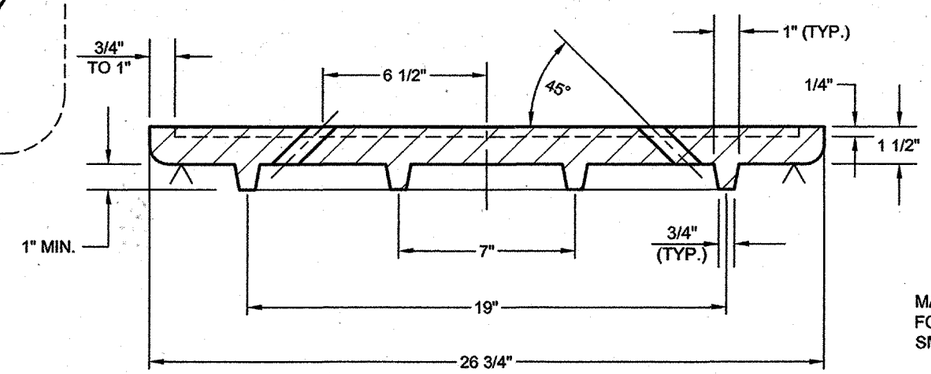

SECTION OF COVER

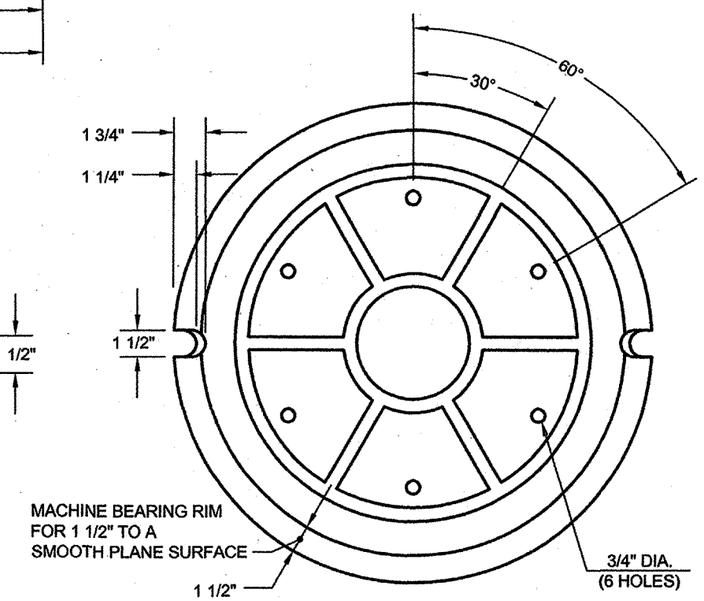

BOTTOM VIEW OF COVER

NOTES:

(1) FRAME MATERIAL: GRAY CAST IRON ASTM A-48 CLASS 35B.
MINIMUM WEIGHT OF FRAME IS 345 LBS.

(2) COVER MATERIAL: GRAY CAST IRON ASTM A-48 CLASS 35B.
MINIMUM WEIGHT OF COVER IS 195 LBS.

(3) DESIGN LOADING: HS20-44 HIGHWAY LOADING.

(4) ALL MANHOLE FRAMES & COVERS SHALL HAVE THE MANUFACTURER'S IDENTIFICATION, CAST DATE OR HEAT NUMBER AND COUNTRY OF ORIGIN INTEGRALLY CAST ON INDIVIDUAL PIECES AT THE TIME OF MANUFACTURE IN ACCORDANCE WITH THE DEP SPECIFICATION.

P.E.
ASSISTANT COMMISSIONER, DESIGN
DEPARTMENT OF DESIGN AND CONSTRUCTION

9/15/08
DATE

P.E.
DIRECTOR OF ENGINEERING
DEPARTMENT OF ENVIRONMENTAL PROTECTION

9/15/08
DATE

REVISED NOVEMBER 2006: L. ADRIEN

CITY OF NEW YORK
DEPARTMENT OF ENVIRONMENTAL PROTECTION

SE40

STANDARD FOR 27" DIAMETER CAST IRON EXTENSION RING FOR 27" DIAMETER MANHOLE FRAME AND COVER

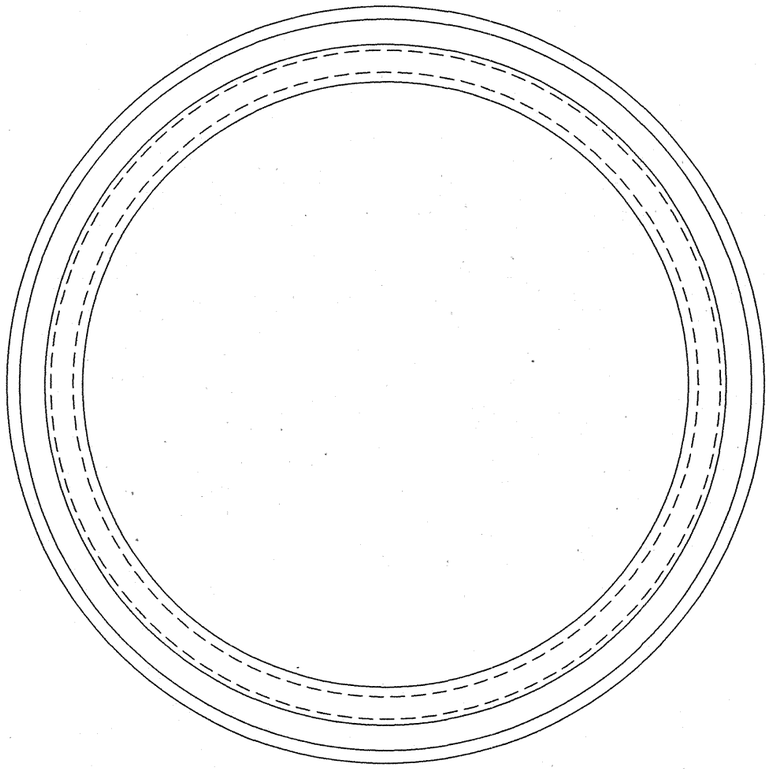

PLAN

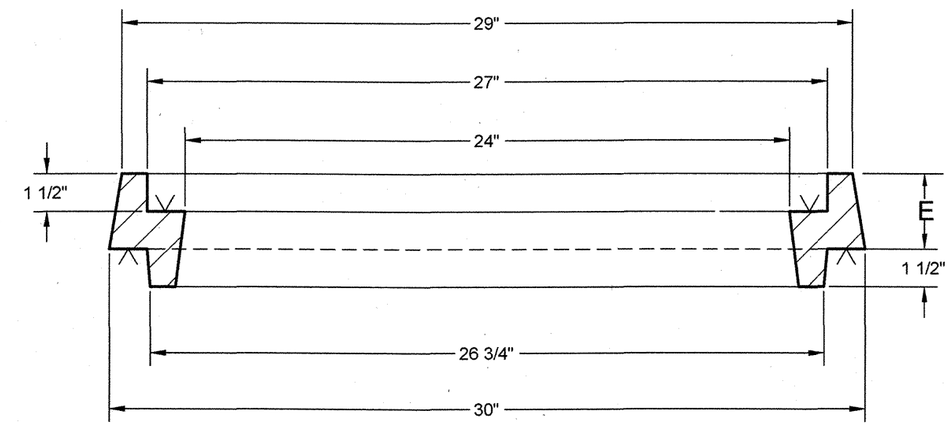

SECTION

E = 2" for 2" raise
E = 3" for 3" raise
E = 4" for 4" raise
Minimum Raise: 2"
Maximum Raise: 4"

NOTES:

(1) MATERIAL: GRAY CAST IRON ASTM A-48, CLASS 35B. MINIMUM WEIGHT OF EXTENSION RINGS: 2" = 120 LBS.; 3" = 150 LBS.; 4" = 170 LBS.

(2) DESIGN LOADING: HS20-44 HIGHWAY LOADING.

(3) ALL MANHOLE FRAMES & COVERS SHALL HAVE THE MANUFACTURER'S IDENTIFICATION, CAST DATE OR HEAT NUMBER AND COUNTRY OF ORIGIN INTEGRALLY CAST ON INDIVIDUAL PIECES AT THE TIME OF MANUFACTURE IN ACCORDANCE WITH THE DEP SPECIFICATION.

REVISED MAY 2004: L. ADRIEN

Gregor W. Carson P.E.
ASSISTANT COMMISSIONER, DESIGN
DEPARTMENT OF DESIGN AND CONSTRUCTION

7/9/07
DATE

Magdi Farag P.E.
DIRECTOR OF ENGINEERING
DEPARTMENT OF ENVIRONMENTAL PROTECTION

8/10/07
DATE

SE41

CITY OF NEW YORK
DEPARTMENT OF ENVIRONMENTAL PROTECTION

STANDARD FOR 36" DIAMETER MANHOLE FRAME AND COVER FOR CLEANOUT

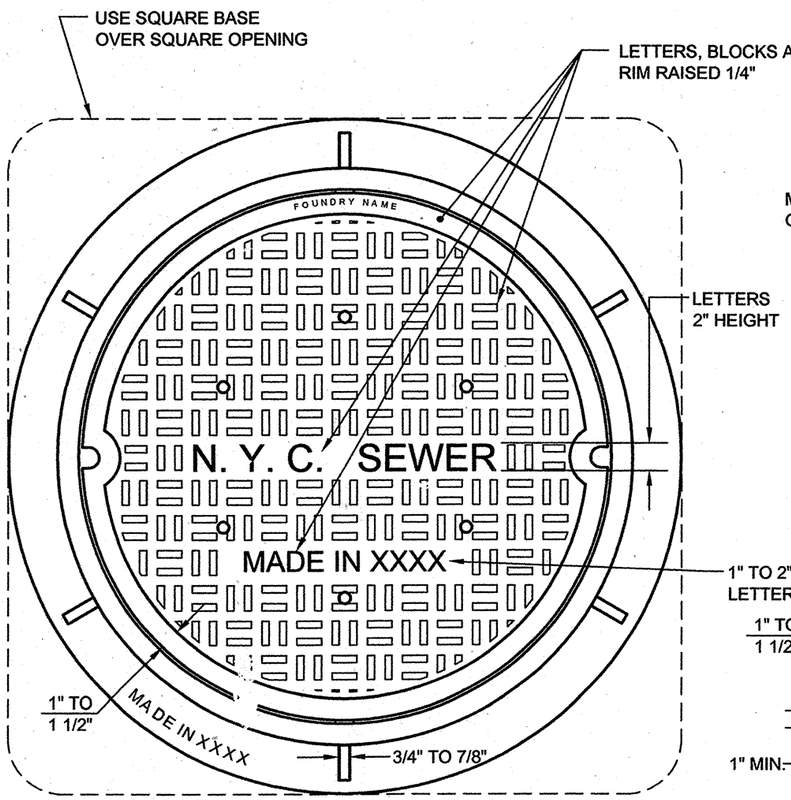

PLAN VIEW OF FRAME AND COVER

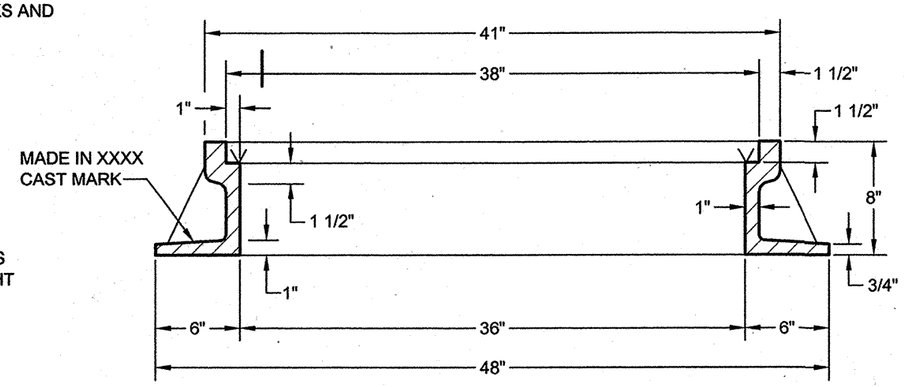

SECTION OF FRAME

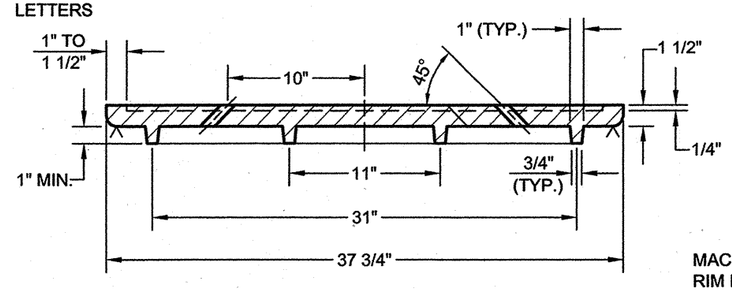

SECTION OF COVER

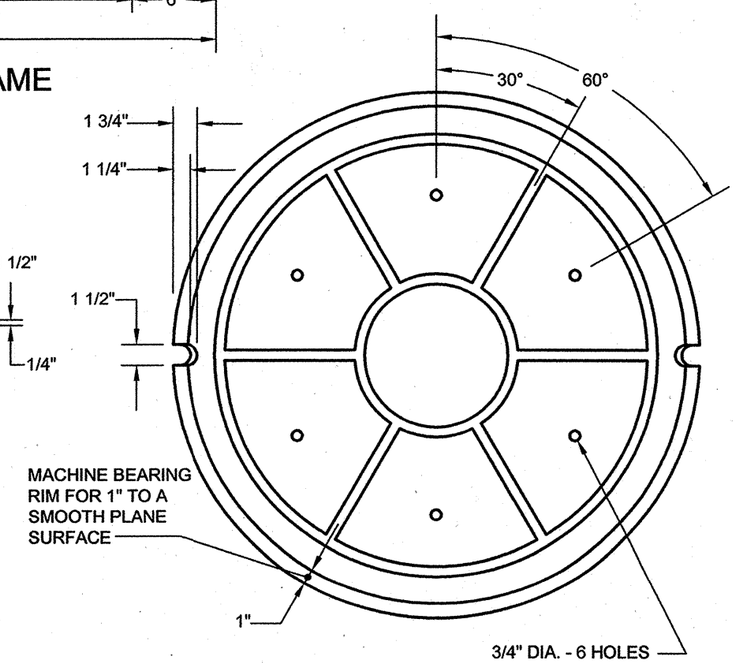

BOTTOM VIEW OF COVER

NOTES:

(1) FRAME MATERIAL: GRAY CAST IRON ASTM A-48 CLASS 35B. MINIMUM WEIGHT OF FRAME IS 480 LBS.

(2) COVER MATERIAL: GRAY CAST IRON ASTM A-48 CLASS 35B. MINIMUM WEIGHT OF COVER IS 400 LBS.

(3) DESIGN LOADING: HS20-44 HIGHWAY LOADING.

(4) ALL MANHOLE FRAMES & COVERS SHALL HAVE THE MANUFACTURER'S IDENTIFICATION, CAST DATE OR HEAT NUMBER AND COUNTRY OF ORIGIN INTEGRALLY CAST ON INDIVIDUAL PIECES AT THE TIME OF MANUFACTURE IN ACCORDANCE WITH THE DEP SPECIFICATION.

Gurdip S. Sainin P.E. — 9/15/08

ASSISTANT COMMISSIONER, DESIGN
DEPARTMENT OF DESIGN AND CONSTRUCTION

DATE

Magdi Farrag P.E. — 9/15/08

DIRECTOR OF ENGINEERING
DEPARTMENT OF ENVIRONMENTAL PROTECTION

DATE

REVISED DECEMBER 2006: L. ADRIEN

SE41

CITY OF NEW YORK
DEPARTMENT OF ENVIRONMENTAL PROTECTION

SE42

STANDARD FOR 24" DIAMETER CAST IRON MANHOLE COVER

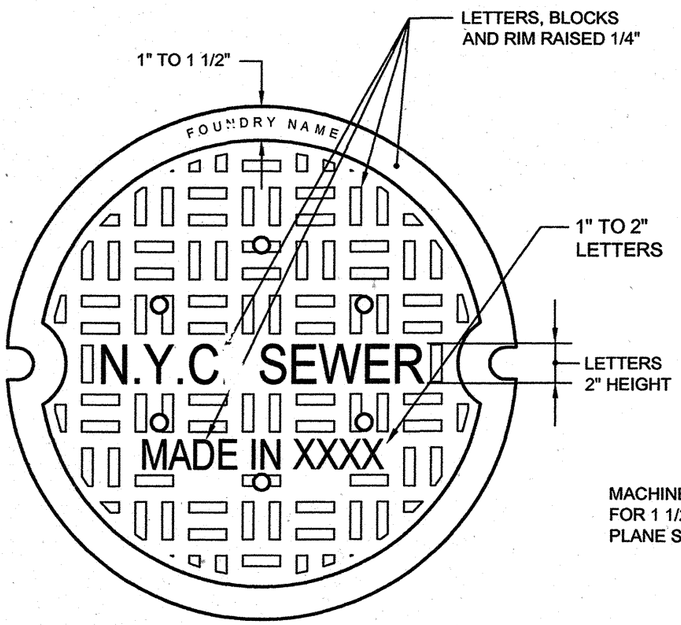

PLAN VIEW OF COVER

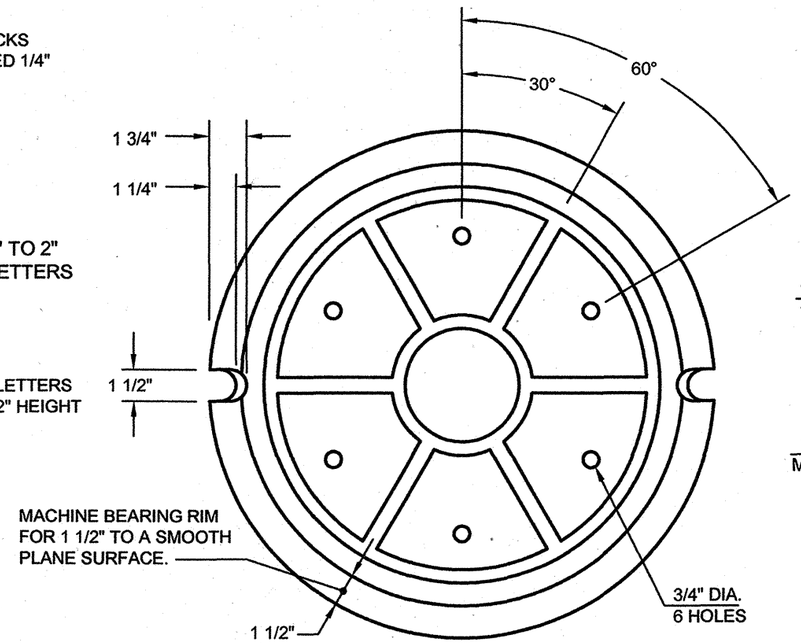

BOTTOM VIEW OF COVER

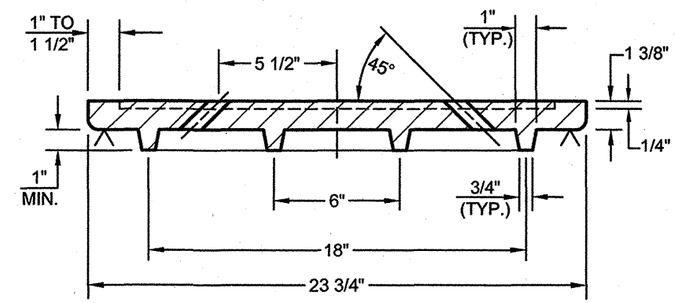

SECTION OF COVER

NOTES:

(1) COVER MATERIAL: GRAY CAST IRON ASTM A-48 CLASS 35B.
MINIMUM WEIGHT OF COVER IS 130 LBS.

(2) DESIGN LOADING: HS20-44 HIGHWAY LOADING.

(3) ALL MANHOLE COVERS SHALL HAVE THE MANUFACTURER'S IDENTIFICATION, CAST DATE OR HEAT NUMBER AND COUNTRY OF ORIGIN INTEGRALLY CAST ON INDIVIDUAL PIECES AT THE TIME OF MANUFACTURE IN ACCORDANCE WITH THE DEP SPECIFICATION.

(4) TO BE USED ONLY TO REPLACE BROKEN OR DAMAGED EXISTING 24" DIAMETER SEWER MANHOLE COVER.

P.E.
ASSISTANT COMMISSIONER, DESIGN
DEPARTMENT OF DESIGN AND CONSTRUCTION

9/15/08
DATE

P.E.
DIRECTOR OF ENGINEERING
DEPARTMENT OF ENVIRONMENTAL PROTECTION

9/15/08
DATE

REVISED DECEMBER 2006: L. ADRIEN

SE43

CITY OF NEW YORK
DEPARTMENT OF ENVIRONMENTAL PROTECTION

STANDARD FOR CAST IRON MANHOLE STEP

SE43

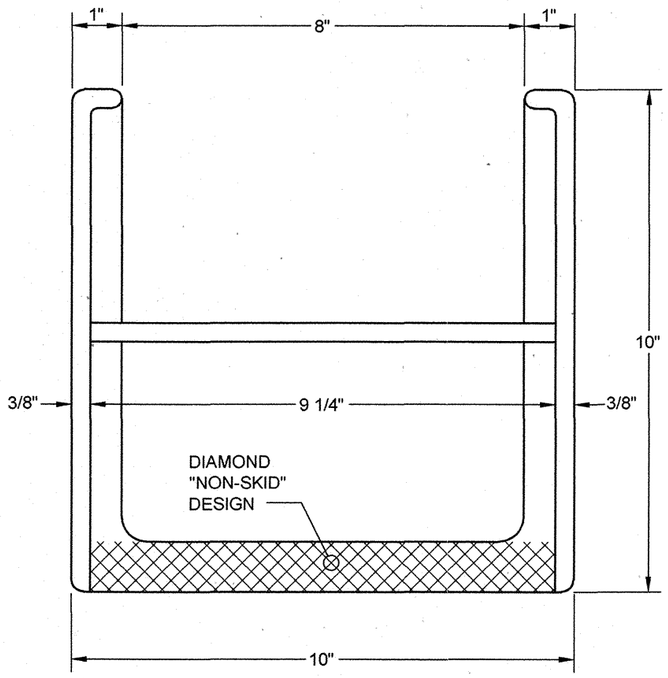

PLAN

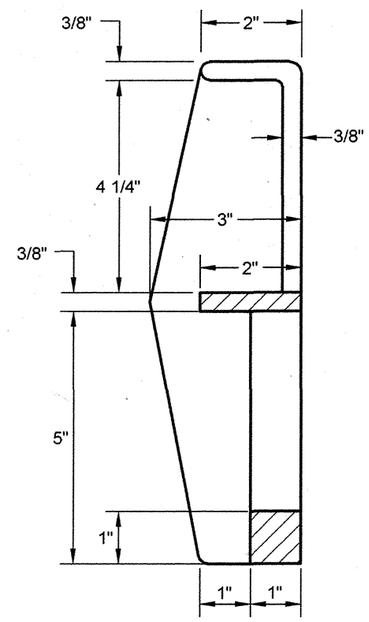

SECTION

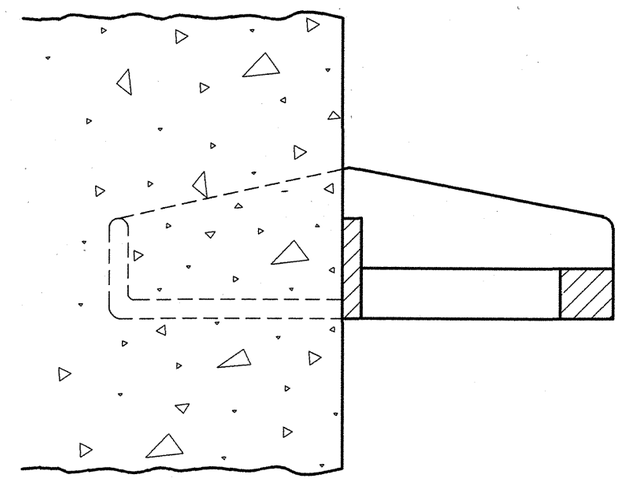

SECTION OF STEP IN PLACE

NOTES:

(1) MATERIAL: GRAY CAST IRON ASTM A-48 CLASS 35B. MINIMUM WEIGHT OF STEP IS 11 LBS.

(2) ALL MANHOLE STEPS SHALL HAVE THE MANUFACTURER'S IDENTIFICATION, CAST DATE OR HEAT NUMBER AND COUNTRY OF ORIGIN INTEGRALLY CAST ON INDIVIDUAL PIECES AT THE TIME OF MANUFACTURE IN ACCORDANCE WITH THE DEP SPECIFICATION.

P.E.
ASSISTANT COMMISSIONER, DESIGN
DEPARTMENT OF DESIGN AND CONSTRUCTION

7/9/07
DATE

P.E.
DIRECTOR OF ENGINEERING
DEPARTMENT OF ENVIRONMENTAL PROTECTION

8/10/07
DATE

REVISED DECEMBER 2006: L. ADRIEN

CITY OF NEW YORK
DEPARTMENT OF ENVIRONMENTAL PROTECTION

SE44

STANDARD FOR CAST IRON MANHOLE STEP

(BOLT-ON TYPE)

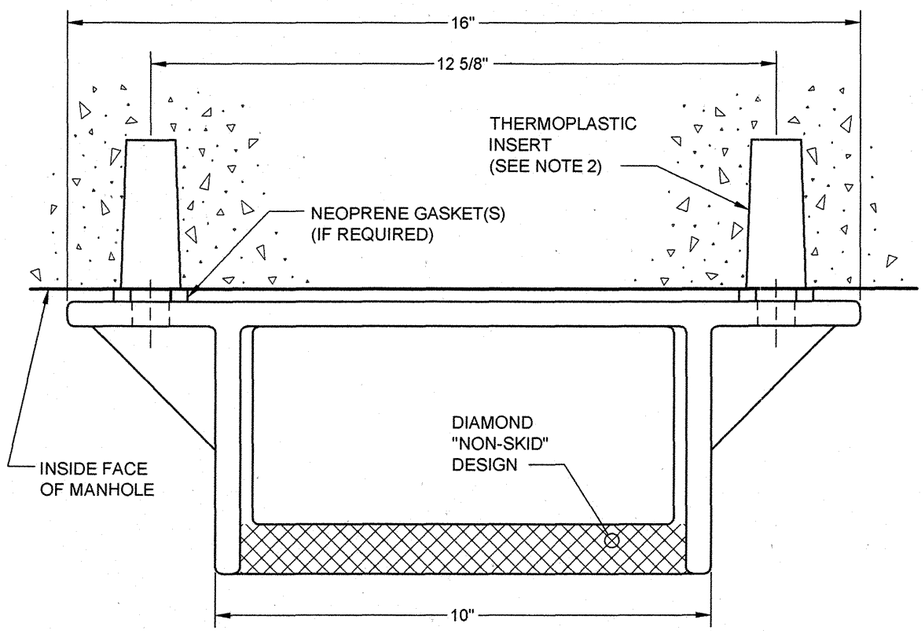

PLAN

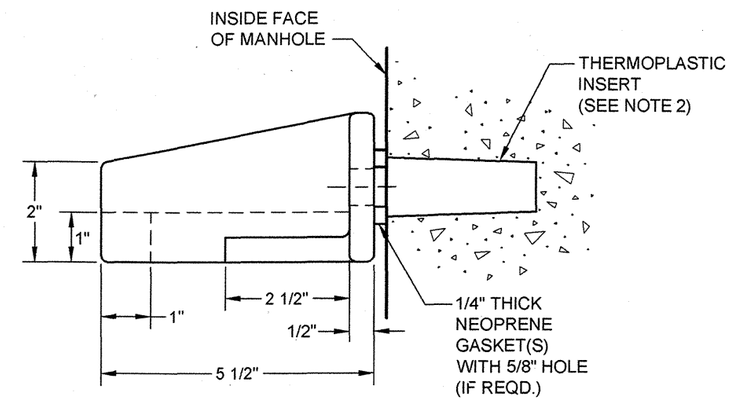

SIDE ELEVATION

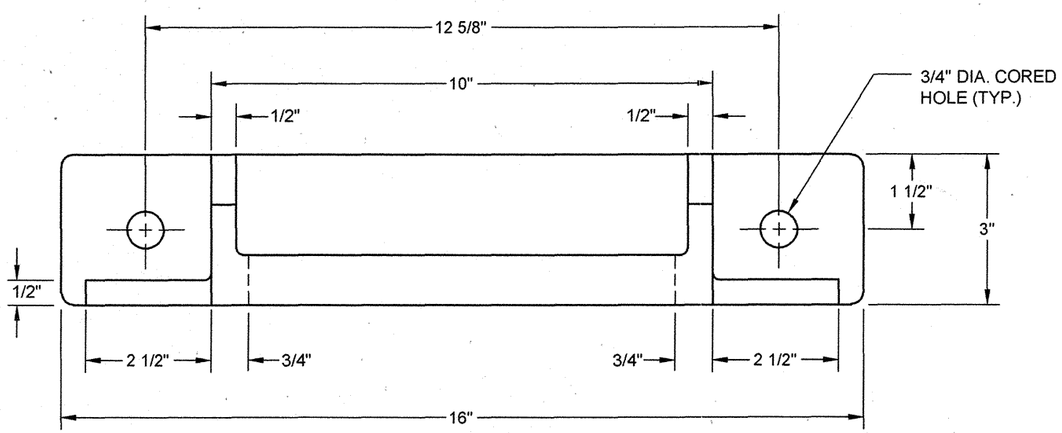

FRONT ELEVATION

NOTES:

(1) MATERIAL: GRAY CAST IRON ASTM A-48 CLASS 35B. MINIMUM WEIGHT OF BOLT-ON STEP IS 13 LBS.

(2) THERMOPLASTIC INSERT AS MANUFACTURED BY PENNSYLVANIA INSERT CORP., OR EQUAL, WITH 5/8"-11 X 2 1/2" STAINLESS STEEL BOLT AND WASHER.

OR

1 1/8" X 2" CORED HOLE FOR 5/8"-11 X 2 1/2" STAINLESS STEEL BOLT AND WASHER, WITH ACKERMAN - JOHNSON EXPANSIVE SCREW ANCHOR WITH NONCORROSIVE BRASS CONES, CATALOG NO. 701-62.

(3) ALL MANHOLE STEPS SHALL HAVE THE MANUFACTURER'S IDENTIFICATION, CAST DATE OR HEAT NUMBER AND COUNTRY OF ORIGIN INTEGRALLY CAST ON INDIVIDUAL PIECES AT THE TIME OF MANUFACTURE IN ACCORDANCE WITH THE DEP SPECIFICATION.

Gigi W. Conen P.E.
ASSISTANT COMMISSIONER, DESIGN
DEPARTMENT OF DESIGN AND CONSTRUCTION

7/9/07
DATE

Maedi Farah P.E.
DIRECTOR OF ENGINEERING
DEPARTMENT OF ENVIRONMENTAL PROTECTION

8/10/07
DATE

REVISED DECEMBER 2006: L. ADRIEN

SE45

CITY OF NEW YORK
DEPARTMENT OF ENVIRONMENTAL PROTECTION

SE45

STANDARD FOR CIRCULAR CAST IRON MANHOLE STEP

(BOLT-ON TYPE)

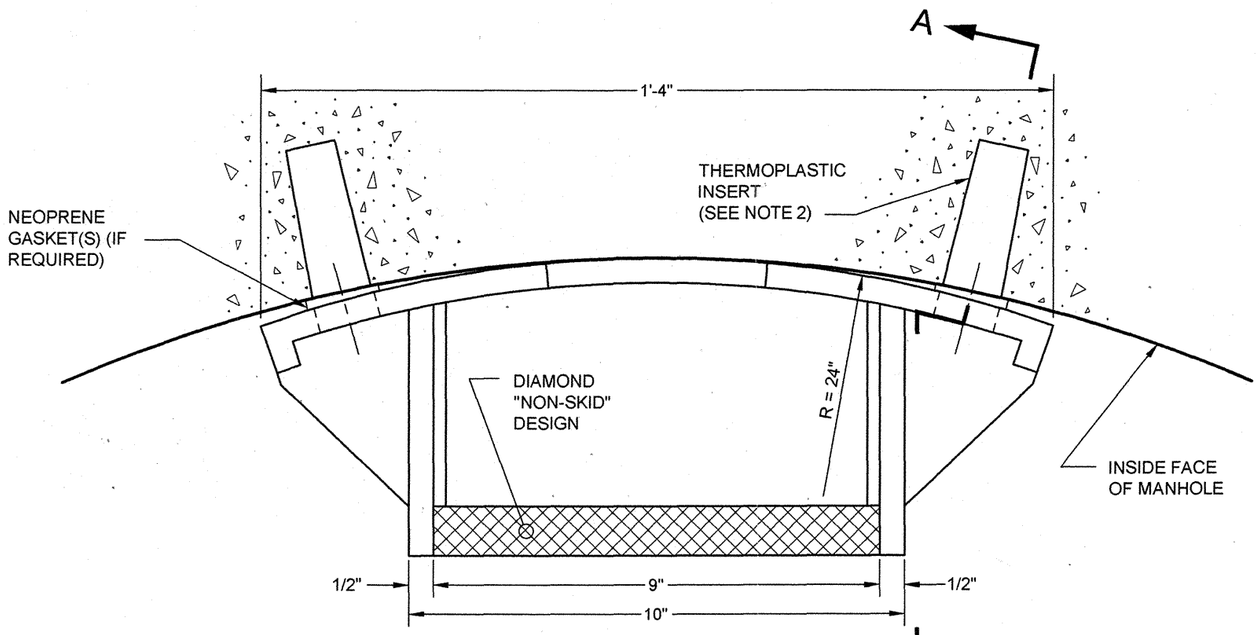

PLAN

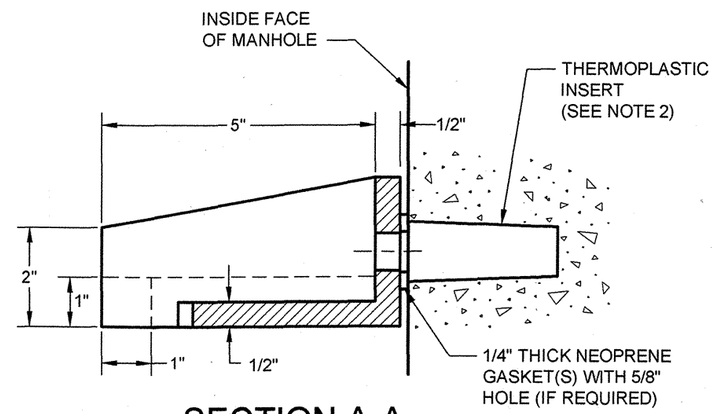

SECTION A-A

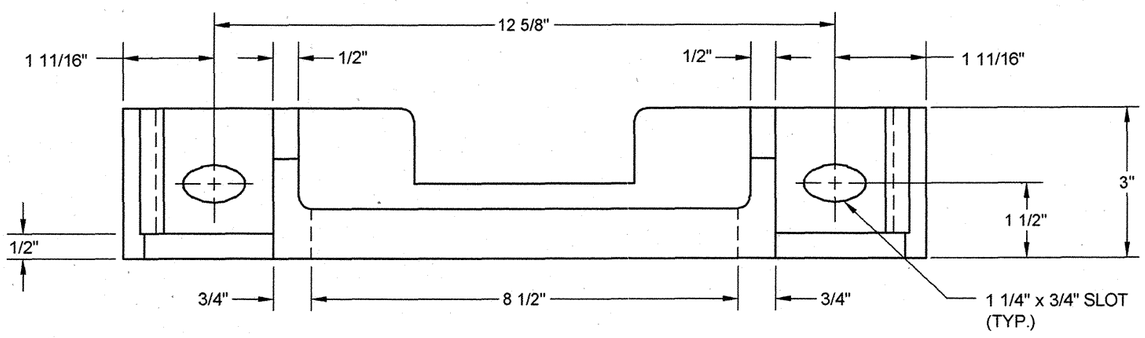

FRONT ELEVATION

NOTES:

(1) MATERIAL: GRAY CAST IRON ASTM A-48 CLASS 35B. MINIMUM WEIGHT OF CIRCULAR BOLT-ON STEP IS 13 LBS.

(2) THERMOPLASTIC INSERT AS MANUFACTURED BY PENNSYLVANIA INSERT CORP., OR EQUAL, WITH 5/8"-11 X 2 1/2" STAINLESS STEEL BOLT AND WASHER.

OR

1 1/8" X 2" CORED HOLE FOR 5/8"-11 X 2 1/2" STAINLESS STEEL BOLT AND WASHER, WITH ACKERMAN - JOHNSON EXPANSIVE SCREW ANCHOR WITH NONCORROSIVE BRASS CONES, CATALOG NO. 701-62.

(3) ALL MANHOLE STEPS SHALL HAVE THE MANUFACTURER'S IDENTIFICATION, CAST DATE OR HEAT NUMBER AND COUNTRY OF ORIGIN INTEGRALLY CAST ON INDIVIDUAL PIECES AT THE TIME OF MANUFACTURE IN ACCORDANCE WITH THE DEP SPECIFICATION.

Gege W. Caron P.E. — 7/9/07
ASSISTANT COMMISSIONER, DESIGN
DEPARTMENT OF DESIGN AND CONSTRUCTION
DATE

Macdi Farrell P.E. — 8/10/07
DIRECTOR OF ENGINEERING
DEPARTMENT OF ENVIRONMENTAL PROTECTION
DATE

REVISED DECEMBER 2006: L. ADRIEN

CITY OF NEW YORK
DEPARTMENT OF ENVIRONMENTAL PROTECTION

SE46

STANDARD FOR PLASTIC MANHOLE STEP

(COPOLYMER POLYPROPYLENE PLASTIC MANHOLE STEP)

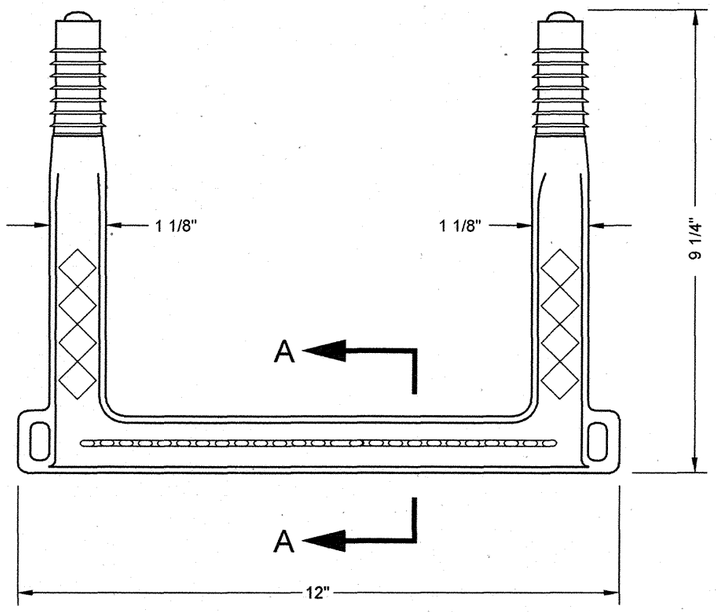

PLAN

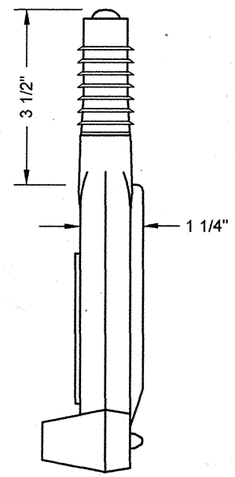

SIDE ELEVATION

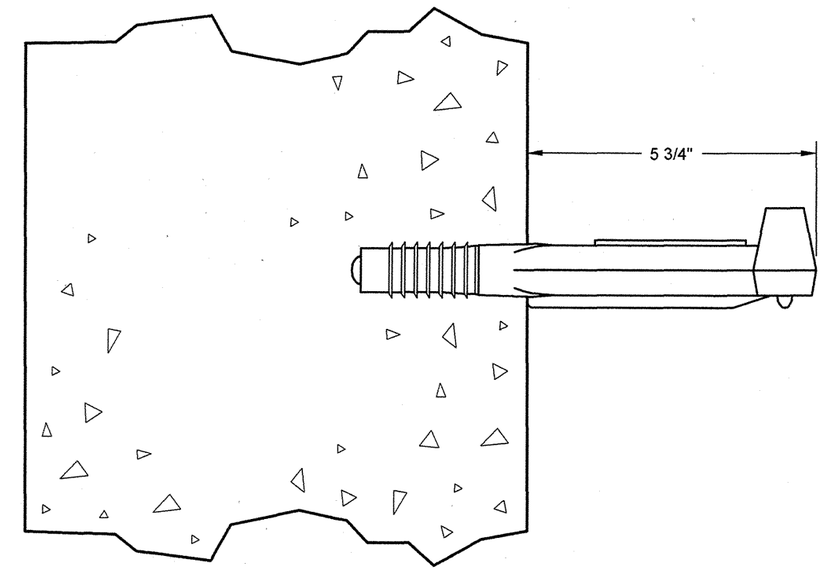

ANCHORAGE DETAIL

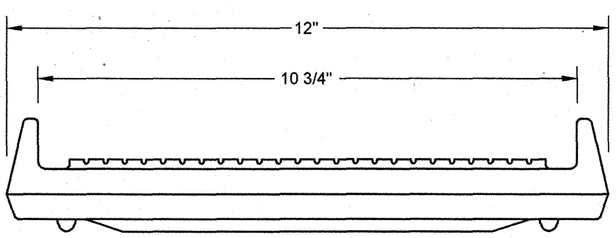

FRONT ELEVATION

NOTE:

PLASTIC MANHOLE STEP MAY BE SUBSTITUTED FOR CAST IRON MANHOLE STEP, UNLESS OTHERWISE DIRECTED BY THE ENGINEER.

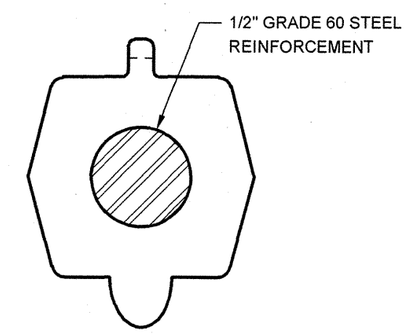

SECTION A-A

Gegel W. Carver P.E.
ASSISTANT COMMISSIONER, DESIGN
DEPARTMENT OF DESIGN AND CONSTRUCTION

7/9/07
DATE

Maedi Fara P.E.
DIRECTOR OF ENGINEERING
DEPARTMENT OF ENVIRONMENTAL PROTECTION

8/10/07
DATE

REVISED SEPTEMBER 2004: L. ADRIEN

CITY OF NEW YORK
DEPARTMENT OF ENVIRONMENTAL PROTECTION

STANDARD FOR TYPE 1 CATCH BASIN

(WITH CURB PIECE)

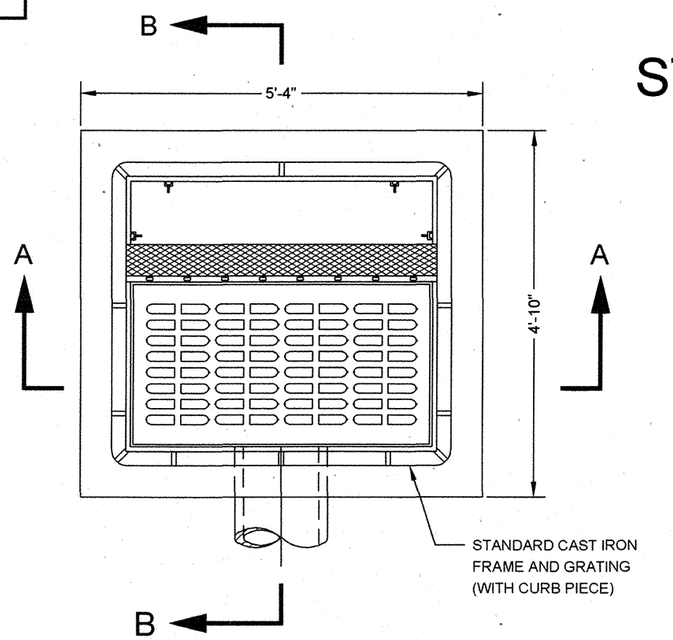

PLAN
(WITH CASTING)

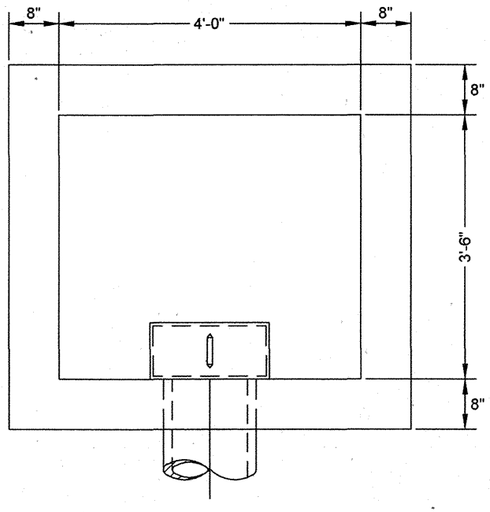

PLAN
(WITH CASTING)

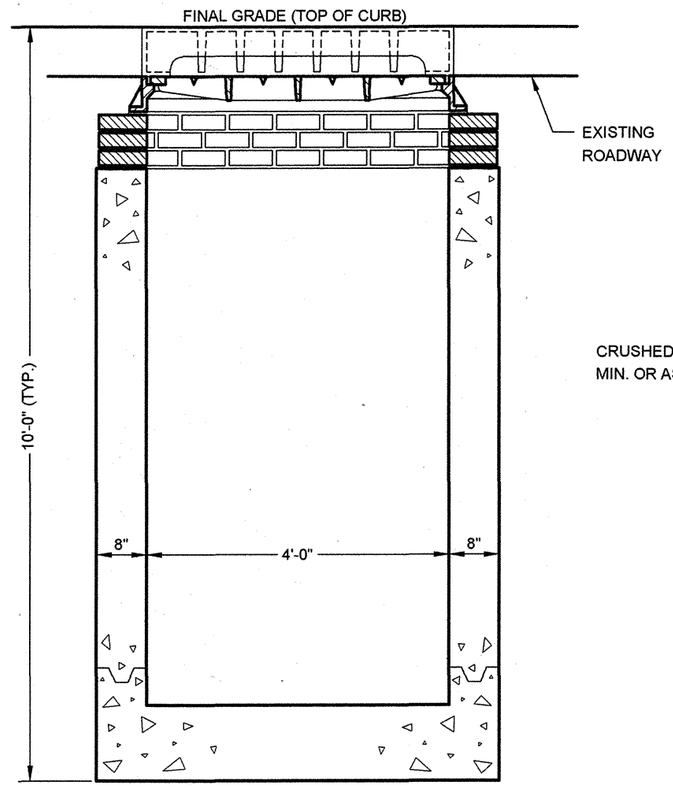

SECTION A-A

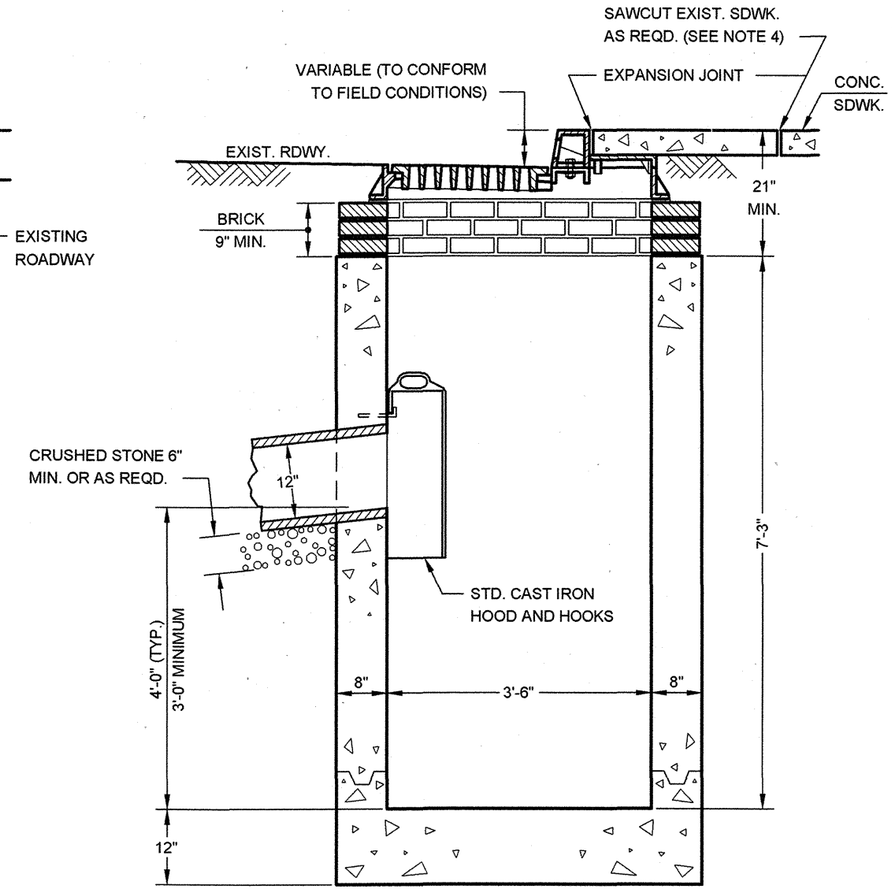

SECTION B-B

NOTES:

(1) LOCATION AND ANGLE OF BASIN CONNECTION MAY BE VARIED TO SUIT FIELD CONDITIONS.

(2) KEYED CONSTRUCTION JOINTS ARE REQUIRED BETWEEN ANY SUCCESSIVE POURS.

(3) THE MINIMUM DROP FROM BASIN TO SEWER SHALL BE 6".

(4) EXPANSION JOINTS ARE REQUIRED IN THE CONCRETE SIDEWALK AREA AT A DISTANCE OF 1'-0" AROUND THE PERIMETER OF THE BASIN.

(5) CONCRETE IS TO BE CLASS 40. REBARS-GRADE 60.

P.E.
ASSISTANT COMMISSIONER, DESIGN
DEPARTMENT OF DESIGN AND CONSTRUCTION

7/9/07
DATE

P.E.
DIRECTOR OF ENGINEERING
DEPARTMENT OF ENVIRONMENTAL PROTECTION

8/10/07
DATE

REVISED SEPTEMBER 2004: L. ADRIEN

CITY OF NEW YORK
DEPARTMENT OF ENVIRONMENTAL PROTECTION

SE48

STANDARD FOR TYPE 2 CATCH BASIN
(WITHOUT CURB PIECE)

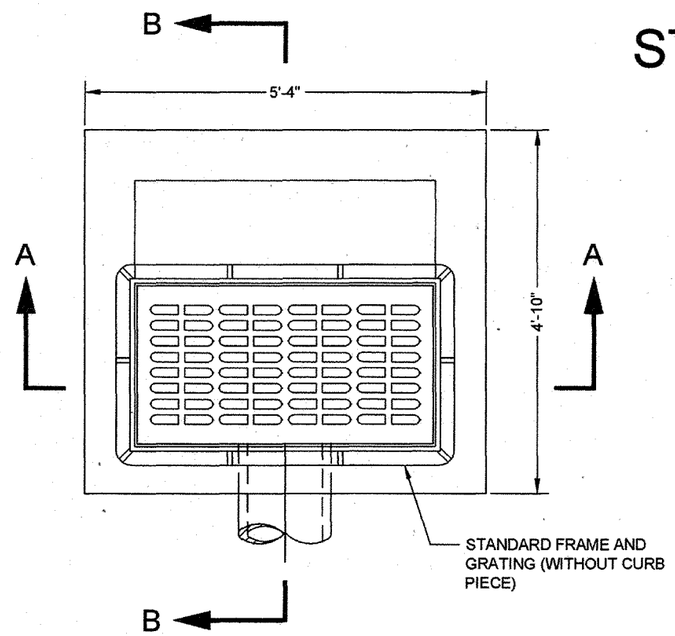

PLAN
(WITH CASTING)

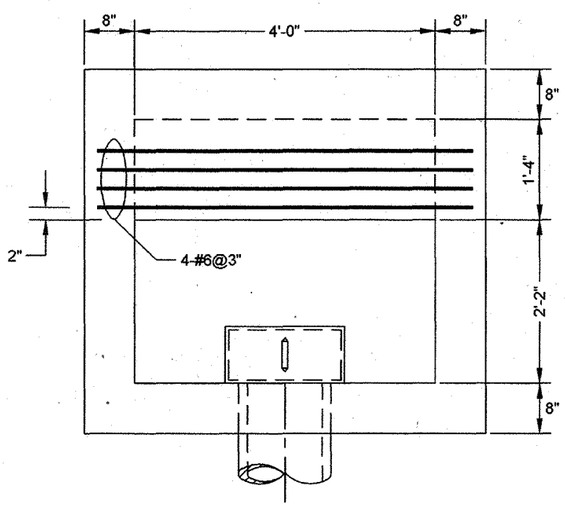

PLAN
(WITHOUT CASTING)

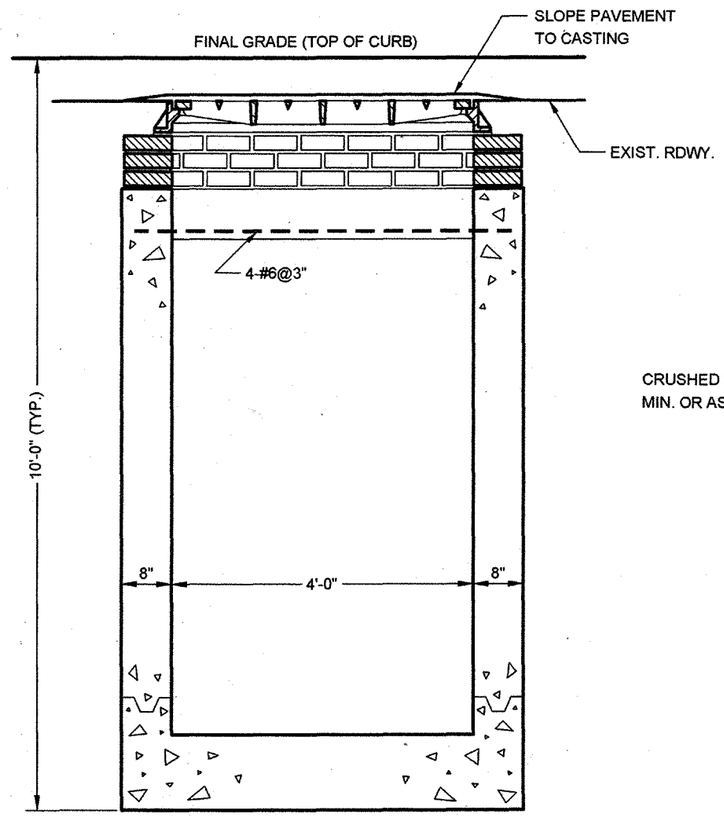

SECTION A-A

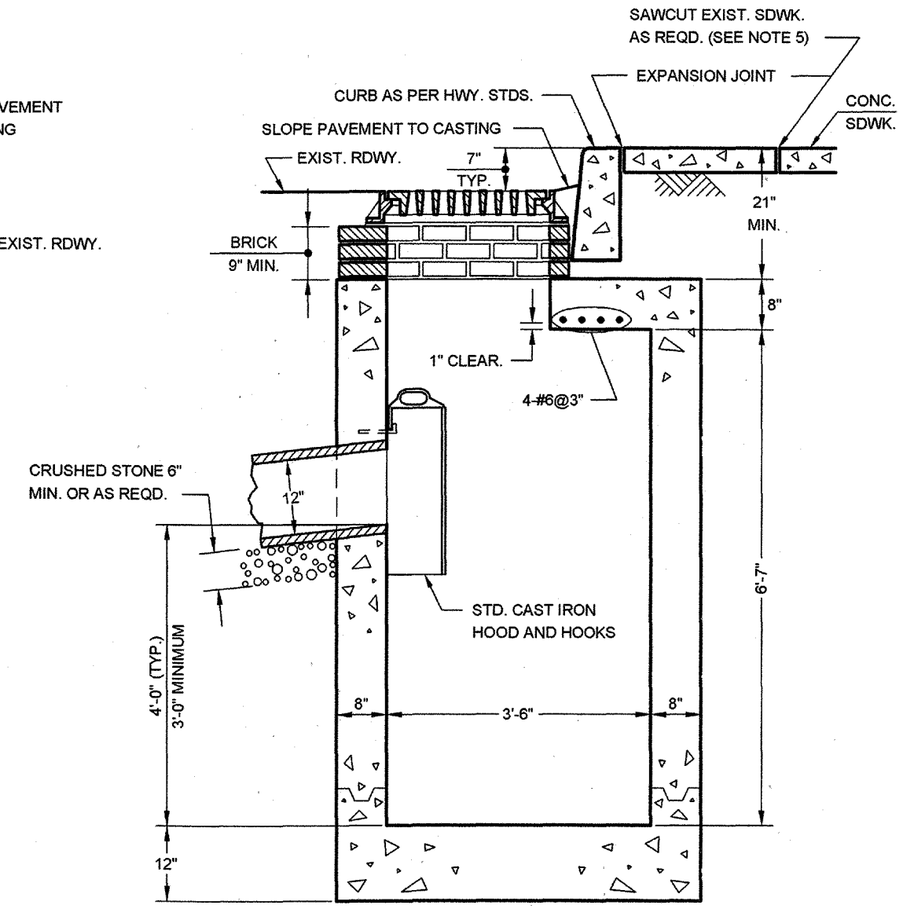

SECTION B-B

NOTES:

(1) LOCATION OF CURB SHALL BE AS SHOWN UNLESS OTHERWISE DIRECTED BY THE ENGINEER.
(2) LOCATION AND ANGLE OF BASIN CONNECTION MAY BE VARIED TO SUIT FIELD CONDITIONS.
(3) KEYED CONSTRUCTION JOINTS ARE REQUIRED BETWEEN ANY SUCCESSIVE POURS.
(4) THE MINIMUM DROP FROM BASIN TO SEWER SHALL BE 6".
(5) EXPANSION JOINTS ARE REQUIRED IN THE CONCRETE SIDEWALK AREA AT A DISTANCE OF 1'-0" AROUND THE PERIMETER OF THE BASIN.
(6) CONCRETE IS TO BE CLASS 40. REBARS-GRADE 60.

Gege W. Carron P.E.
ASSISTANT COMMISSIONER, DESIGN
DEPARTMENT OF DESIGN AND CONSTRUCTION

7/9/07
DATE

Mazdi Tavana P.E.
DIRECTOR OF ENGINEERING
DEPARTMENT OF ENVIRONMENTAL PROTECTION

8/10/07
DATE

REVISED JULY 2004: L. ADRIEN

SE49

CITY OF NEW YORK
DEPARTMENT OF ENVIRONMENTAL PROTECTION

SE49

STANDARD FOR TYPE 3 CATCH BASIN

(WITHOUT CURB PIECE)

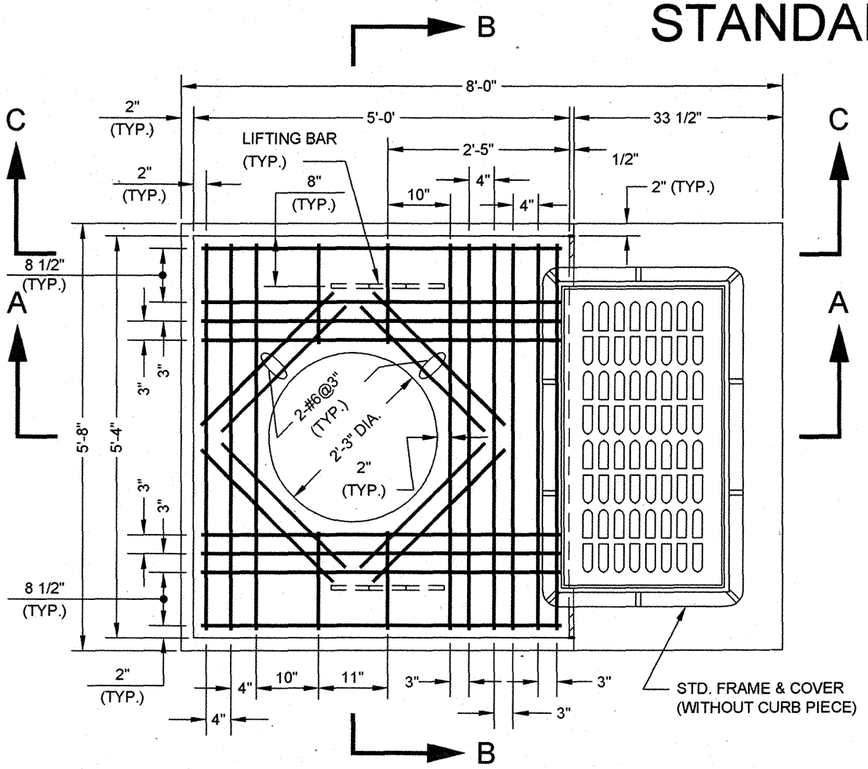

PLAN

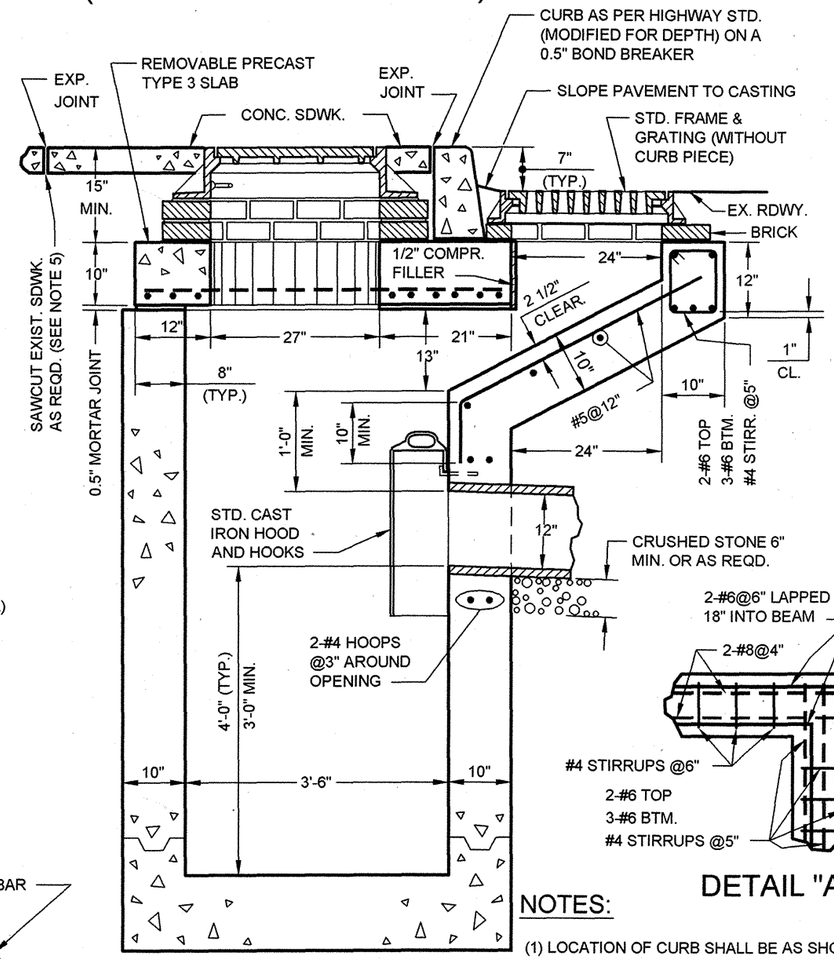

SECTION A-A

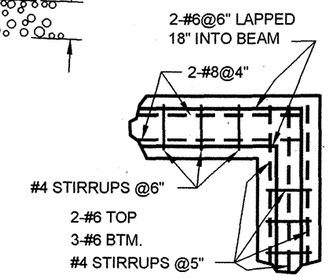

DETAIL "A"

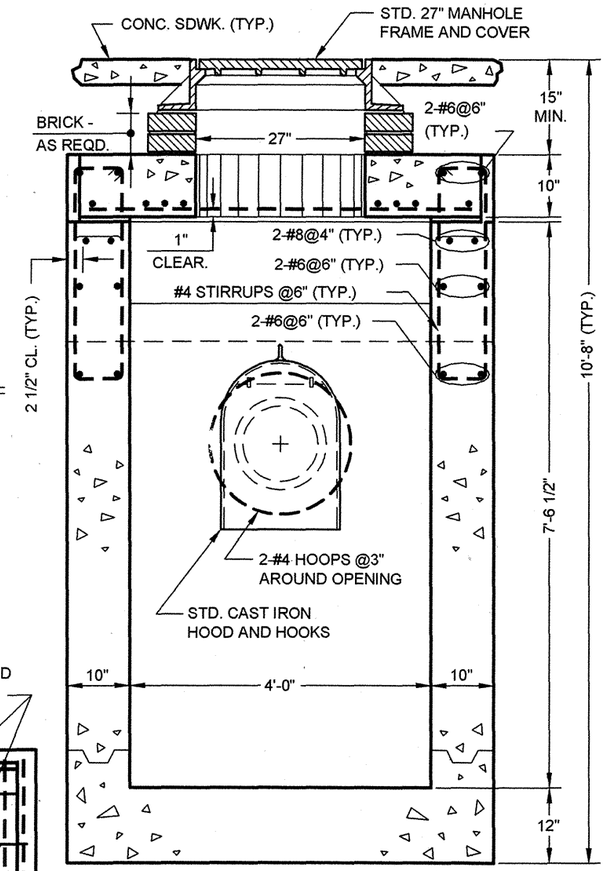

SECTION B-B

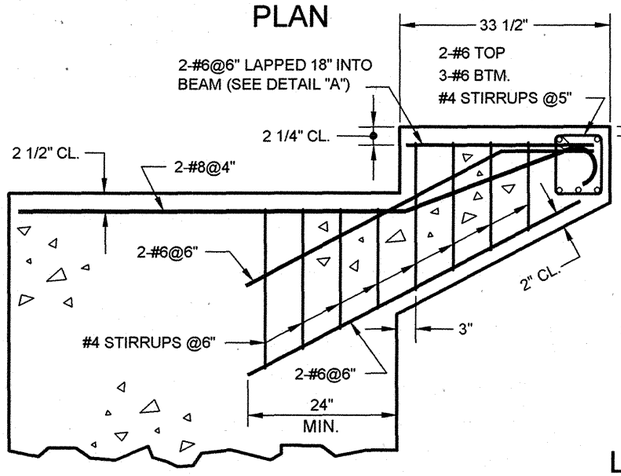

SECTION C-C

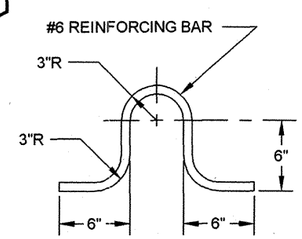

LIFTING BAR DETAIL

NOTES:

(1) LOCATION OF CURB SHALL BE AS SHOWN UNLESS OTHERWISE DIRECTED BY THE ENGINEER.

(2) LOCATION AND ANGLE OF BASIN CONNECTION MAY BE VARIED TO SUIT FIELD CONDITIONS.

(3) THE MINIMUM DROP FROM BASIN TO SEWER SHALL BE 6".

(4) KEYED CONSTRUCTION JOINTS ARE REQUIRED BETWEEN ANY SUCCESSIVE POURS.

(5) EXPANSION JOINTS ARE REQUIRED IN THE CONC. SIDEWALK AREA AT A DISTANCE OF 1'-0" AROUND THE PERIMETER OF THE BASIN.

(6) ALL REINFORCEMENT IS #6 REINFORCING BARS UNLESS OTHERWISE SHOWN.

(7) CONCRETE IS TO BE CLASS 40. REBARS-GRADE 60.

Gene W. Cowen P.E.
ASSISTANT COMMISSIONER, DESIGN
DEPARTMENT OF DESIGN AND CONSTRUCTION

7/9/07
DATE

Macdi Farah P.E.
DIRECTOR OF ENGINEERING
DEPARTMENT OF ENVIRONMENTAL PROTECTION

8/10/07
DATE

REVISED JULY 2004: L. ADRIEN

SE50

CITY OF NEW YORK
DEPARTMENT OF ENVIRONMENTAL PROTECTION

SE50

STANDARD FOR DOUBLE CATCH BASIN

(WITHOUT CURB PIECE)

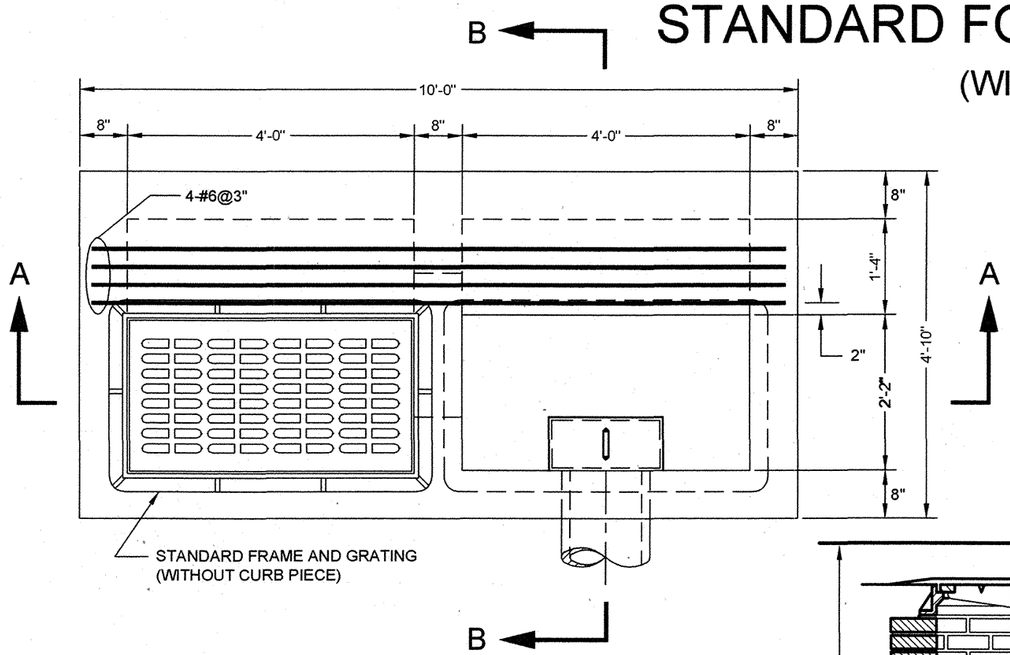

PLAN

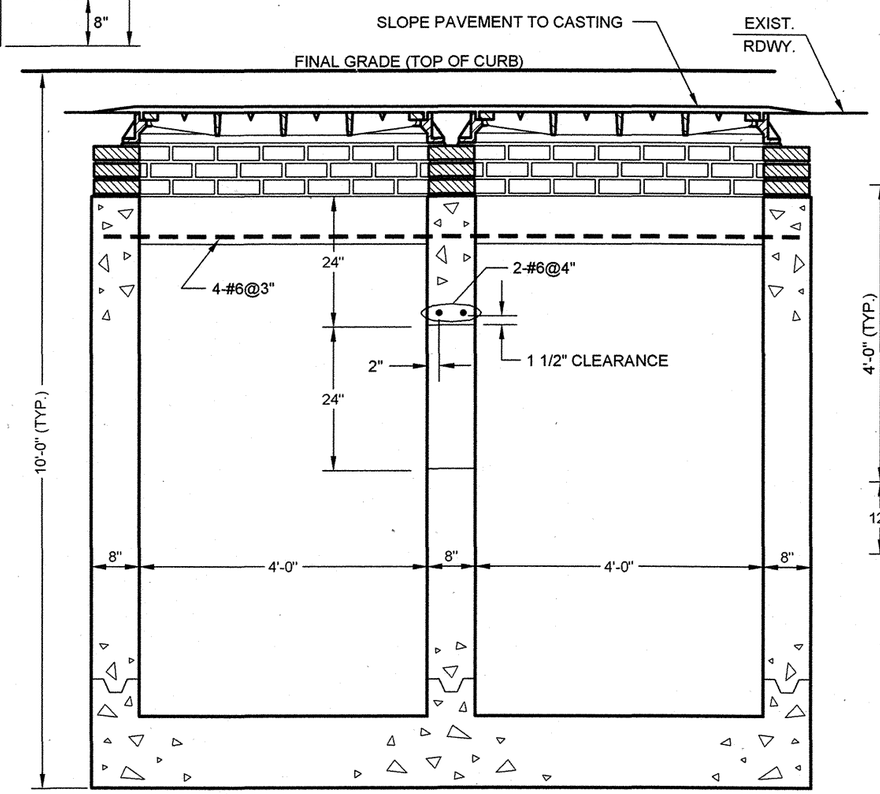

SECTION A-A

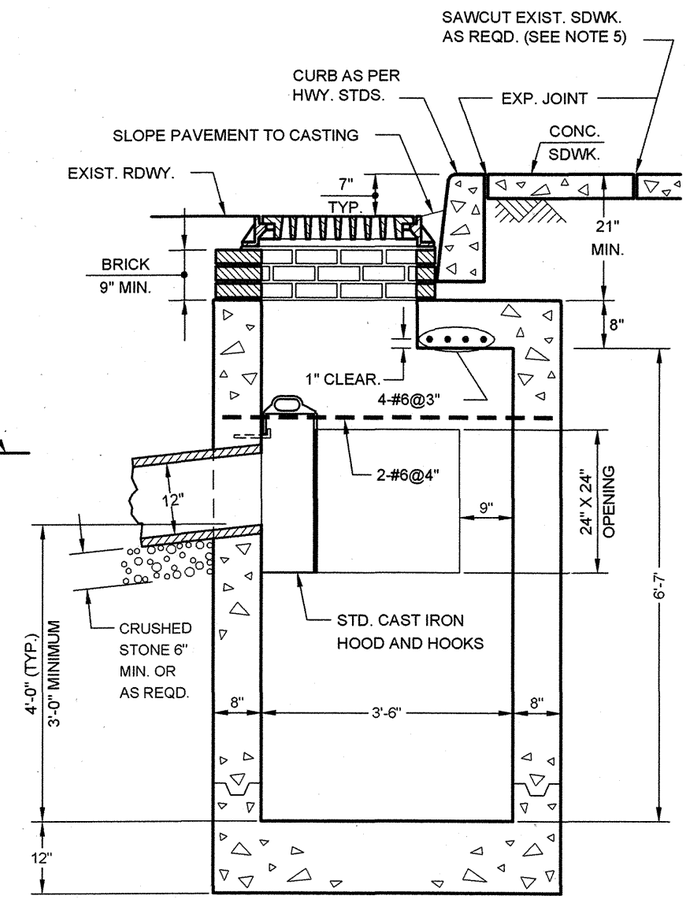

SECTION B-B

NOTES:

(1) LOCATION OF CURB SHALL BE AS SHOWN UNLESS OTHERWISE DIRECTED BY THE ENGINEER.

(2) LOCATION AND ANGLE OF BASIN CONNECTION MAY BE VARIED TO SUIT FIELD CONDITIONS.

(3) KEYED CONSTRUCTION JOINTS ARE REQUIRED BETWEEN ANY SUCCESSIVE POURS.

(4) THE MINIMUM DROP FROM BASIN TO SEWER SHALL BE 6".

(5) EXPANSION JOINTS ARE REQUIRED IN THE CONCRETE SIDEWALK AREA AT A DISTANCE OF 1'-0" AROUND THE PERIMETER OF THE BASIN.

(6) CONCRETE IS TO BE CLASS 40. REBARS-GRADE 60.

REVISED AUGUST 2004: A. KHAN

P.E.
ASSISTANT COMMISSIONER, DESIGN
DEPARTMENT OF DESIGN AND CONSTRUCTION

7/9/07
DATE

P.E.
DIRECTOR OF ENGINEERING
DEPARTMENT OF ENVIRONMENTAL PROTECTION

8/10/07
DATE

SE52A

CITY OF NEW YORK
DEPARTMENT OF ENVIRONMENTAL PROTECTION

SE52A

STANDARD FOR PRECAST TYPE 1 CATCH BASIN

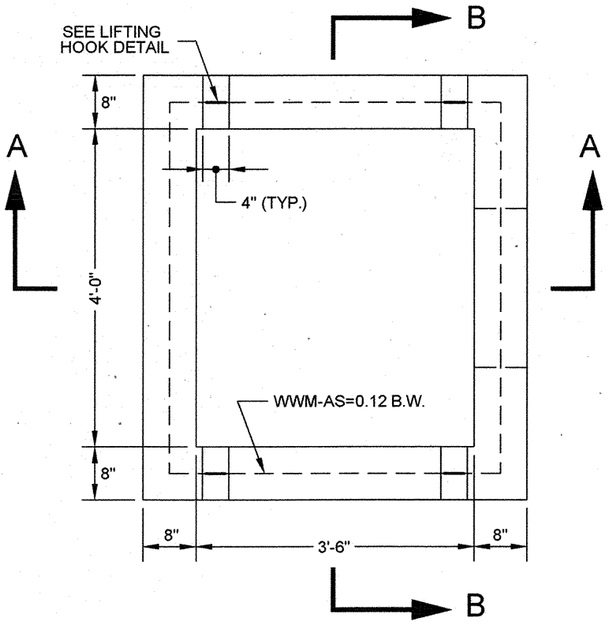

PLAN

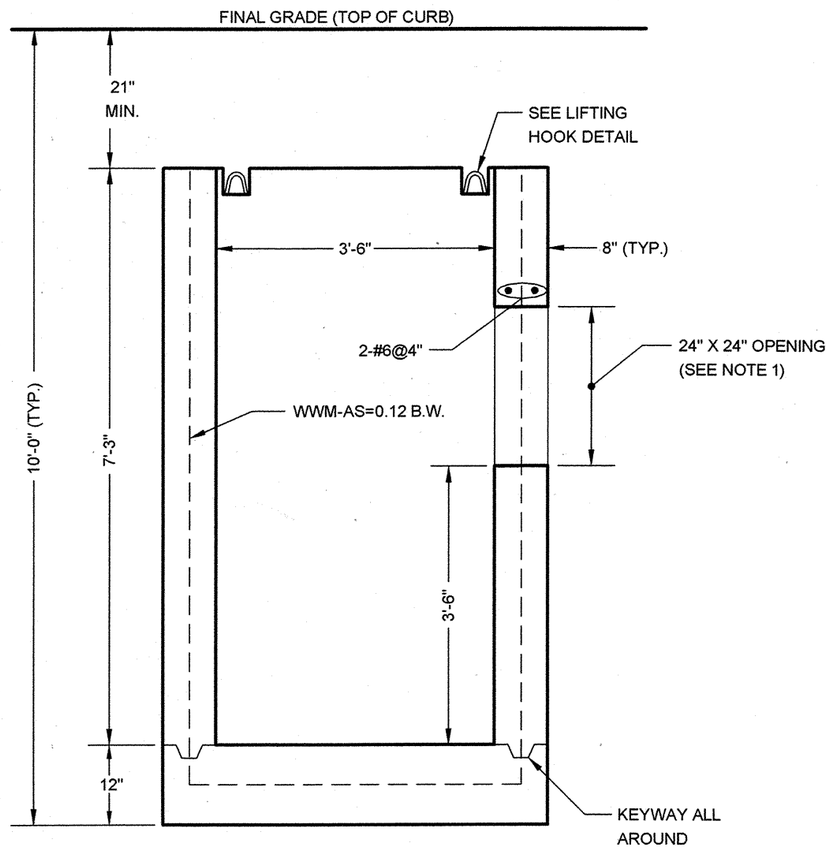

SECTION A-A

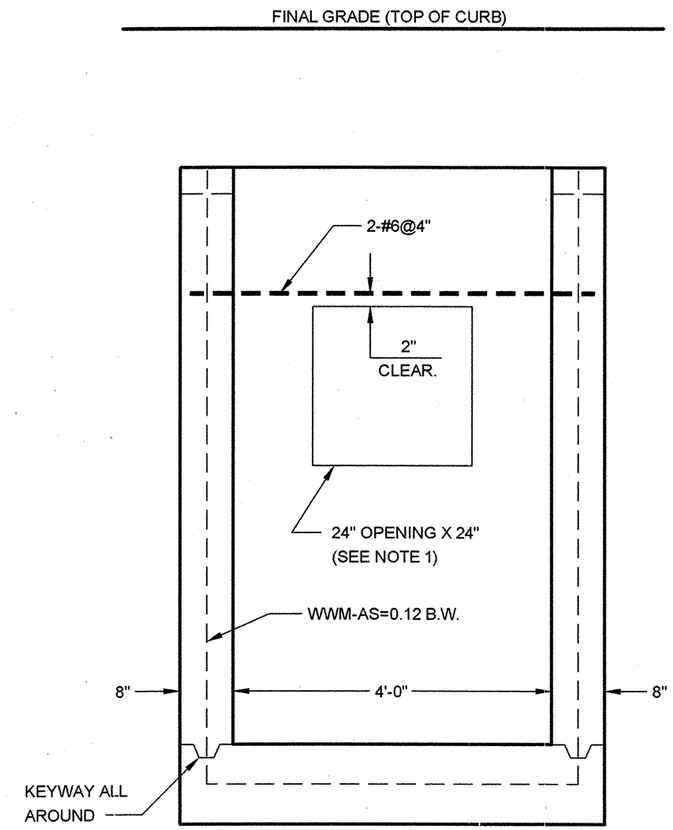

SECTION B-B

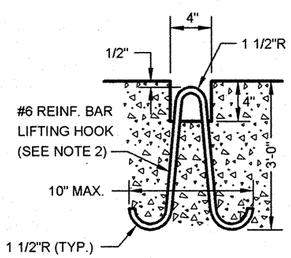

LIFTING HOOK DETAIL
(N.T.S.)

NOTES:

(1) LOCATION OF OPENING SHALL BE DETERMINED PRIOR TO MANUFACTURE OF BASIN BY LOCATION AND ANGLE OF BASIN CONNECTION REQUIRED DUE TO FIELD CONDITIONS AND OPENING SHALL BE PLACED IN THE PROPER WALL AT THE TIME OF MANUFACTURE.

(2) LIFTING HOOKS SHALL BE LOCATED IN THE SECTION AS PER MANUFACTURERS RECOMMENDATIONS AND GROUTED PRIOR TO BACKFILLING. (FOUR (4) LIFTING HOOKS SHALL BE PROVIDED FOR EACH SECTION AND SHALL BE PLACED SYMMETRICALLY AND IN SUCH A MANNER AS TO PROVIDE FOR THE EVEN LIFTING OF THE SECTION.)

(3) CONCRETE IS TO BE CLASS 40 AND 5% AIR ENTRAINED. REBARS-GRADE 60. WWM-FS=65,000 PSI.

Guy W. Carver P.E.
ASSISTANT COMMISSIONER, DESIGN
DEPARTMENT OF DESIGN AND CONSTRUCTION

7/9/07
DATE

Maedi Fara P.E.
DIRECTOR OF ENGINEERING
DEPARTMENT OF ENVIRONMENTAL PROTECTION

8/10/07
DATE

REVISED JANUARY 2007- L. ADRIEN

SE52B

CITY OF NEW YORK
DEPARTMENT OF ENVIRONMENTAL PROTECTION

SE52B

STANDARD FOR SPLIT PRECAST TYPE 1 CATCH BASIN

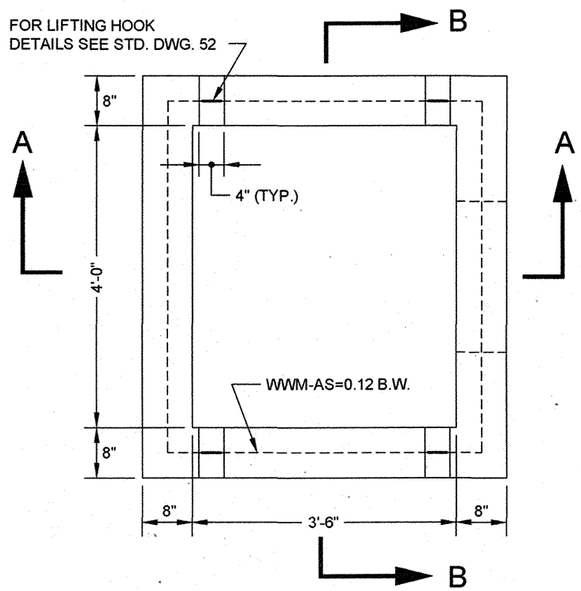

PLAN

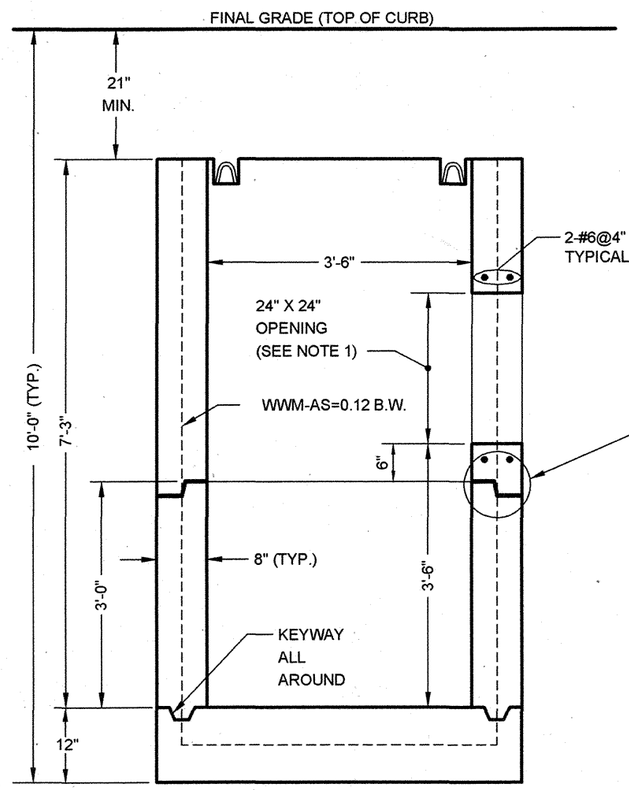

SECTION A-A

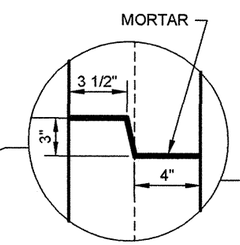

KEY DETAIL

FOR DETAILS OF LIFTING HOOKS SEE
STANDARD DRAWING NO. 52

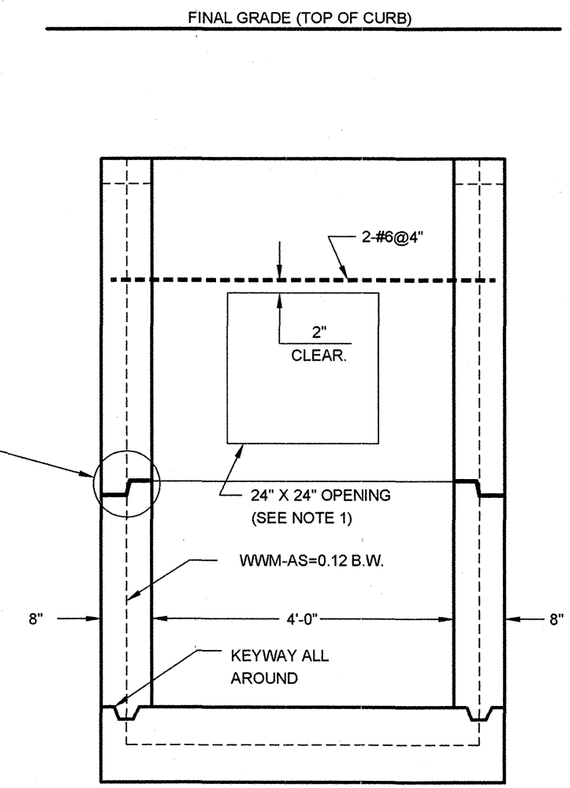

SECTION B-B

NOTES:

(1) LOCATION OF OPENING SHALL BE DETERMINED PRIOR TO MANUFACTURE OF BASIN BY LOCATION AND ANGLE OF BASIN CONNECTION REQUIRED DUE TO FIELD CONDITIONS AND OPENING SHALL BE PLACED IN THE PROPER WALL AT THE TIME OF MANUFACTURE.

(2) LIFTING HOOKS SHALL BE LOCATED IN THE SECTION AS PER MANUFACTURERS RECOMMENDATIONS AND GROUTED PRIOR TO BACKFILLING. (FOUR (4) LIFTING HOOKS SHALL BE PROVIDED FOR EACH SECTION AND SHALL BE PLACED SYMMETRICALLY AND IN SUCH A MANNER AS TO PROVIDE FOR THE EVEN LIFTING OF THE SECTION.)

(3) CONCRETE IS TO BE CLASS 40 AND 5% AIR ENTRAINED. REBARS-GRADE 60. WWM-FS=65,000 PSI.

(4) SPLIT BASINS WILL ONLY BE PERMITTED WHERE STANDARD BASINS CAN NOT BE INSTALLED DUE TO VERTICAL HEIGHT RESTRICTIONS SUCH AS STRUCTURES OR AERIAL ELECTRICAL FACILITIES.

Geze W. Cavan P.E. — 7/9/07
ASSISTANT COMMISSIONER, DESIGN
DEPARTMENT OF DESIGN AND CONSTRUCTION
DATE

Magdi Farrag P.E. — 8/10/07
DIRECTOR OF ENGINEERING
DEPARTMENT OF ENVIRONMENTAL PROTECTION
DATE

REVISED JANUARY 2007: L. ADRIEN

SE53A

CITY OF NEW YORK
DEPARTMENT OF ENVIRONMENTAL PROTECTION

SE53A

STANDARD FOR PRECAST TYPE 2 CATCH BASIN

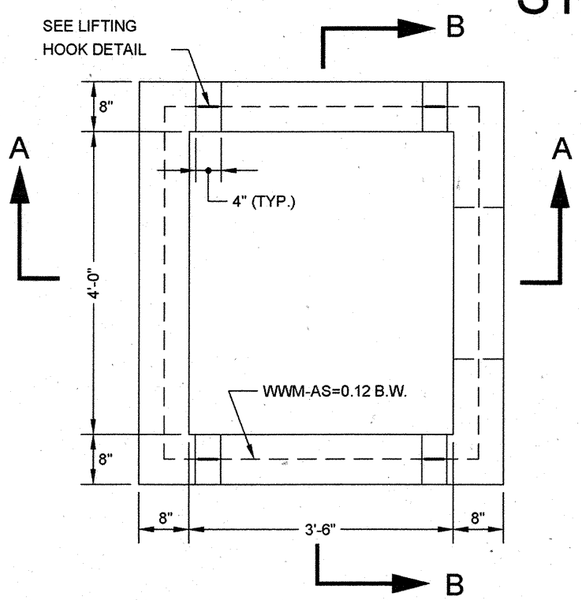

PLAN

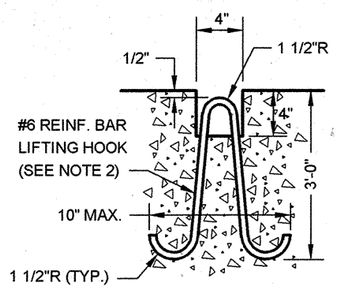

LIFTING HOOK DETAIL
(N.T.S.)

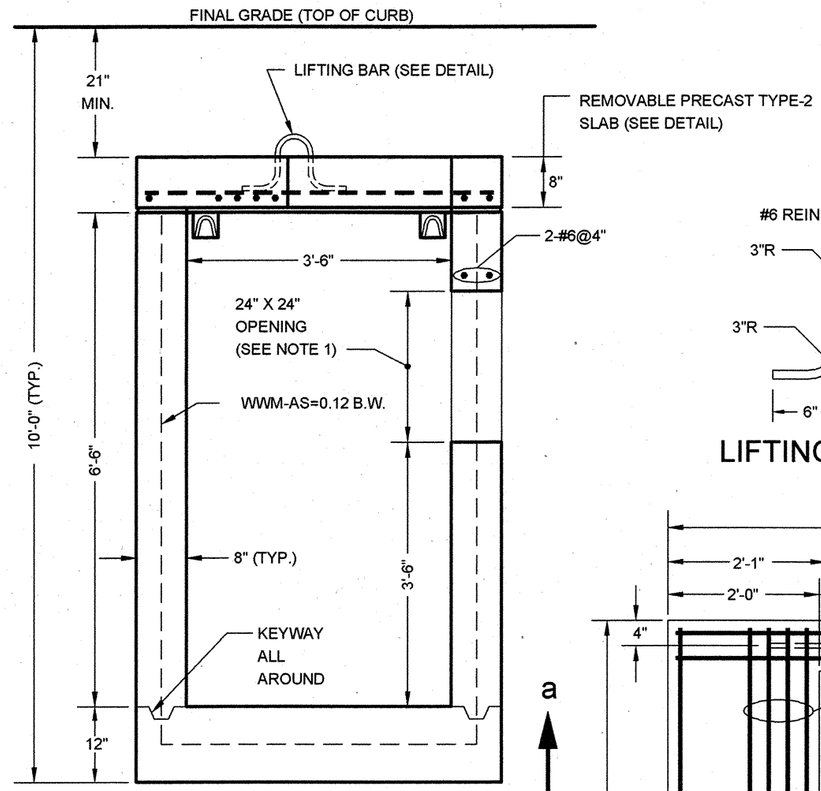

SECTION A-A

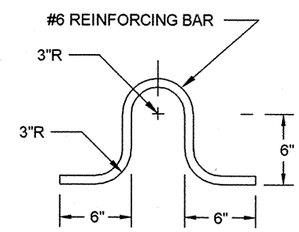

LIFTING BAR DETAIL

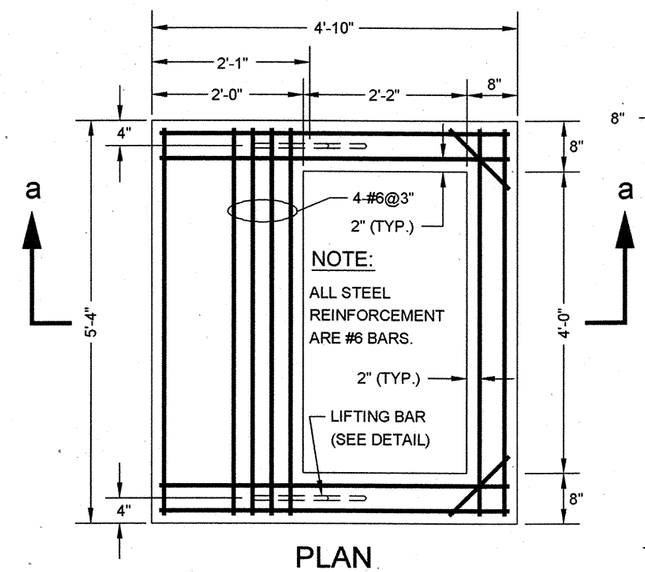

PLAN

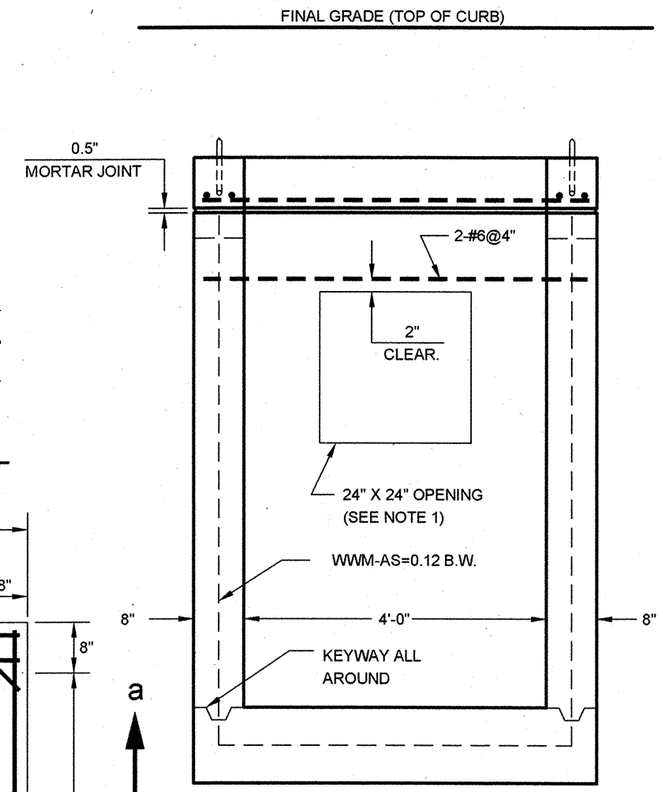

SECTION B-B

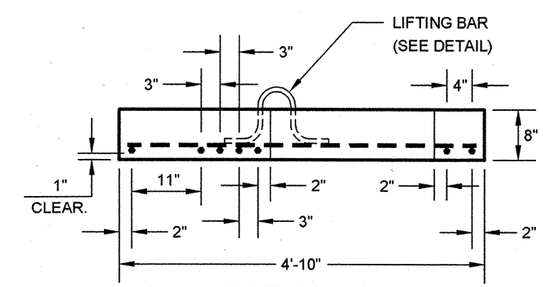

SECTION a-a
REMOVABLE PRECAST TYPE 2 SLAB

NOTES:

(1) LOCATION OF OPENING SHALL BE DETERMINED PRIOR TO MANUFACTURE OF BASIN BY LOCATION AND ANGLE OF BASIN CONNECTION REQUIRED DUE TO FIELD CONDITIONS AND OPENING SHALL BE PLACED IN THE PROPER WALL AT THE TIME OF MANUFACTURE.

(2) LIFTING HOOKS SHALL BE LOCATED IN THE SECTION AS PER MANUFACTURERS RECOMMENDATIONS AND GROUTED PRIOR TO BACKFILLING. (FOUR (4) LIFTING HOOKS SHALL BE PROVIDED FOR EACH SECTION AND SHALL BE PLACED SYMMETRICALLY AND IN SUCH A MANNER AS TO PROVIDE FOR THE EVEN LIFTING OF THE SECTION.)

(3) CONCRETE IS TO BE CLASS 40 AND 5% AIR ENTRAINED. REBARS-GRADE 60. WWM-FS=65,000 PSI.

Gregg W. Cowen P.E. 7/9/07
ASSISTANT COMMISSIONER, DESIGN
DEPARTMENT OF DESIGN AND CONSTRUCTION
DATE

Maedi Farah P.E. 8/10/07
DIRECTOR OF ENGINEERING
DEPARTMENT OF ENVIRONMENTAL PROTECTION
DATE

REVISED JANUARY 2007: L. ADRIEN

SE53B

CITY OF NEW YORK
DEPARTMENT OF ENVIRONMENTAL PROTECTION

SE53B

STANDARD FOR SPLIT PRECAST TYPE 2 CATCH BASIN

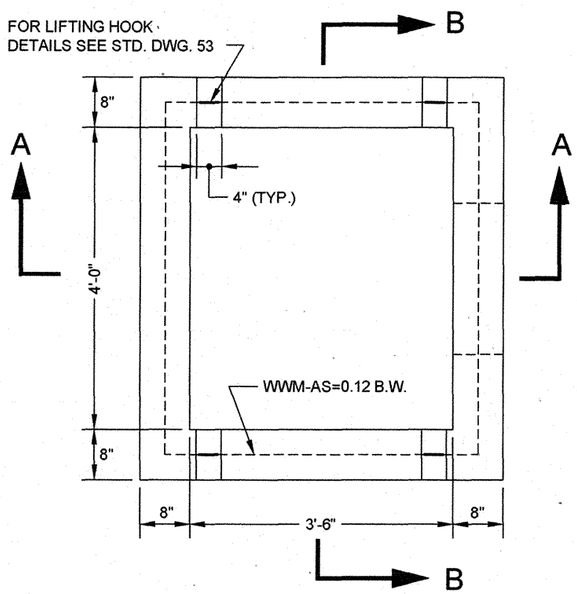

PLAN

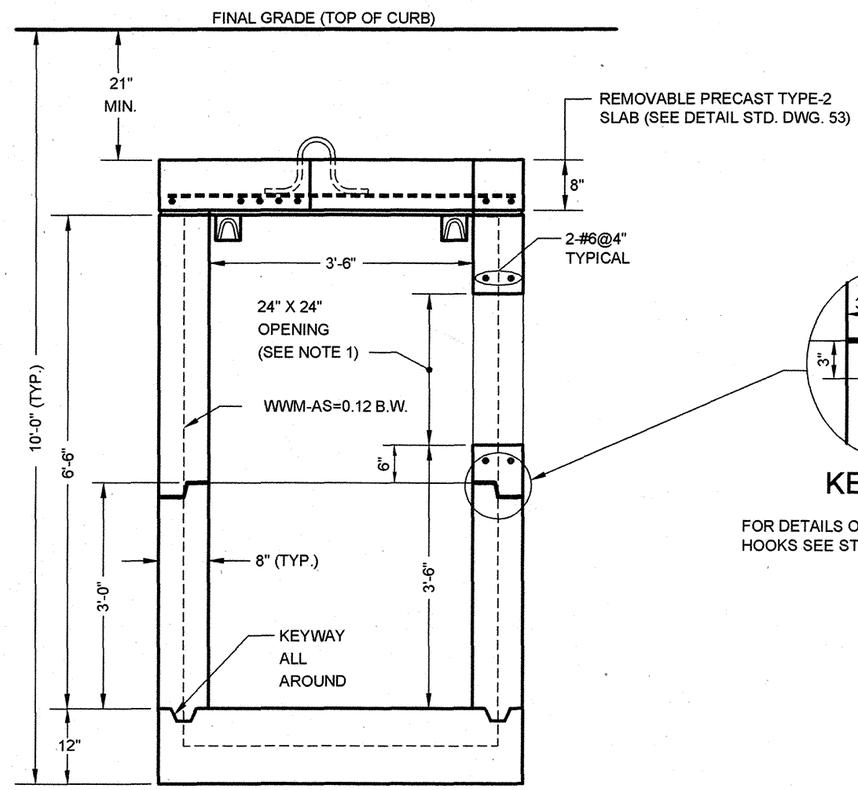

SECTION A-A

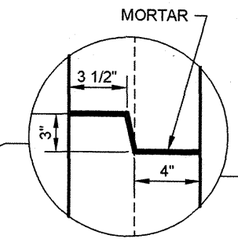

KEY DETAIL

FOR DETAILS OF PRECAST SLAB AND LIFTING HOOKS SEE STANDARD DRAWING NO. 53

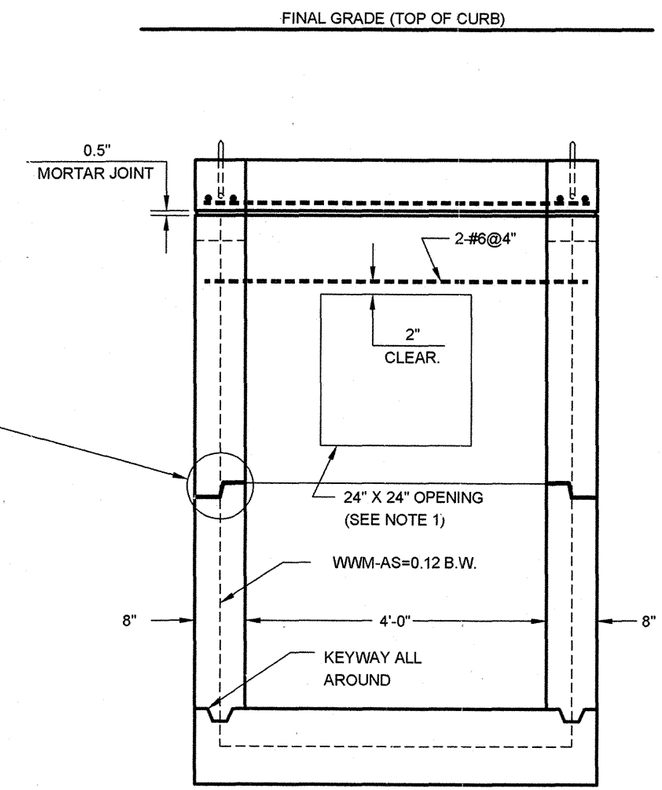

SECTION B-B

NOTES:

(1) LOCATION OF OPENING SHALL BE DETERMINED PRIOR TO MANUFACTURE OF BASIN BY LOCATION AND ANGLE OF BASIN CONNECTION REQUIRED DUE TO FIELD CONDITIONS AND OPENING SHALL BE PLACED IN THE PROPER WALL AT THE TIME OF MANUFACTURE.

(2) LIFTING HOOKS SHALL BE LOCATED IN THE SECTION AS PER MANUFACTURERS RECOMMENDATIONS AND GROUTED PRIOR TO BACKFILLING. (FOUR (4) LIFTING HOOKS SHALL BE PROVIDED FOR EACH SECTION AND SHALL BE PLACED SYMMETRICALLY AND IN SUCH A MANNER AS TO PROVIDE FOR THE EVEN LIFTING OF THE SECTION.)

(3) CONCRETE IS TO BE CLASS 40 AND 5% AIR ENTRAINED. REBARS-GRADE 60. WWM-FS=65,000 PSI.

(4) SPLIT BASINS WILL ONLY BE PERMITTED WHERE STANDARD BASINS CAN NOT BE INSTALLED DUE TO VERTICAL HEIGHT RESTRICTIONS SUCH AS STRUCTURES OR AERIAL ELECTRICAL FACILITIES.

Greg W. Carver P.E. — 7/9/07
ASSISTANT COMMISSIONER, DESIGN
DEPARTMENT OF DESIGN AND CONSTRUCTION
DATE

Macdi Farah P.E. — 8/10/07
DIRECTOR OF ENGINEERING
DEPARTMENT OF ENVIRONMENTAL PROTECTION
DATE

REVISED JANUARY 2007: L. ADRIEN

CITY OF NEW YORK
DEPARTMENT OF ENVIRONMENTAL PROTECTION

SE54

STANDARD FOR PRECAST TYPE 3 CATCH BASIN

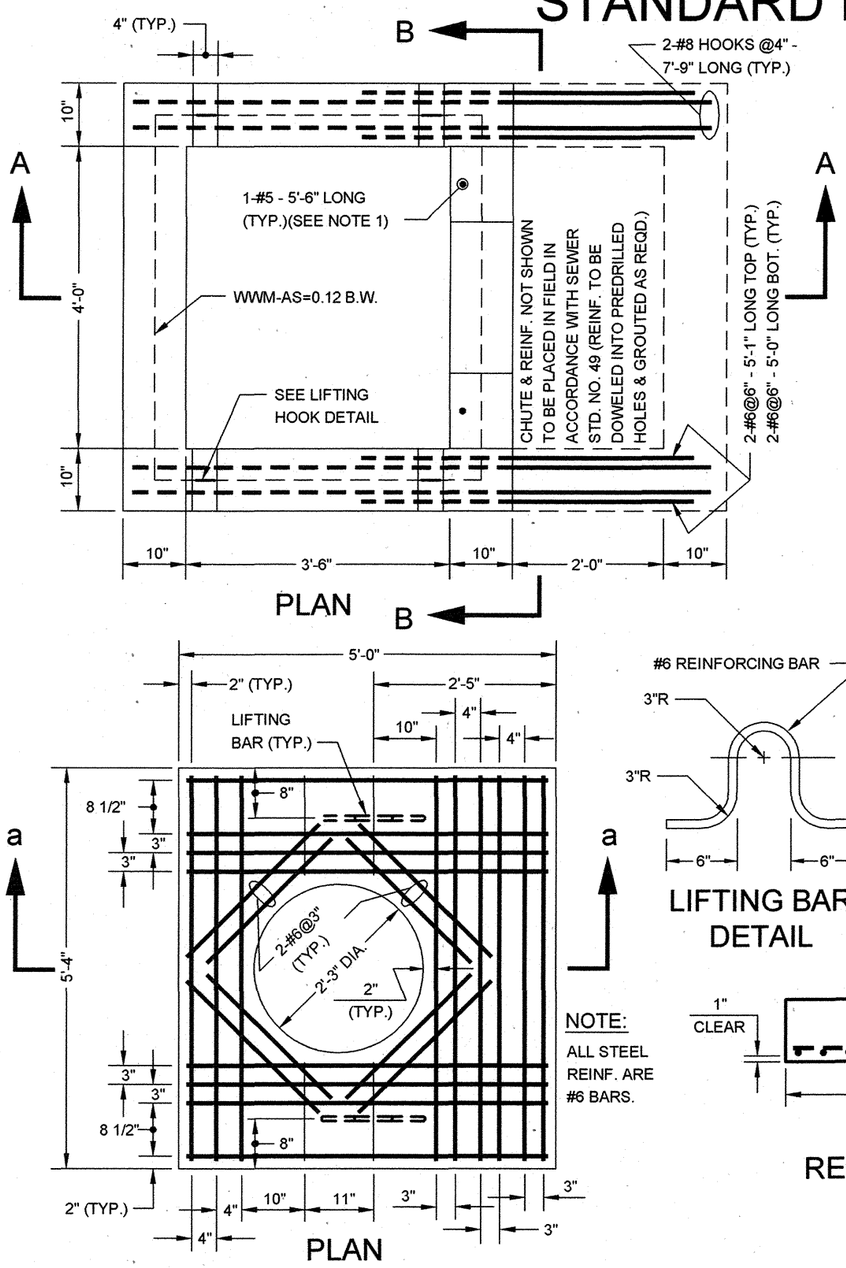

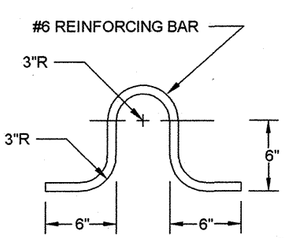

LIFTING BAR DETAIL

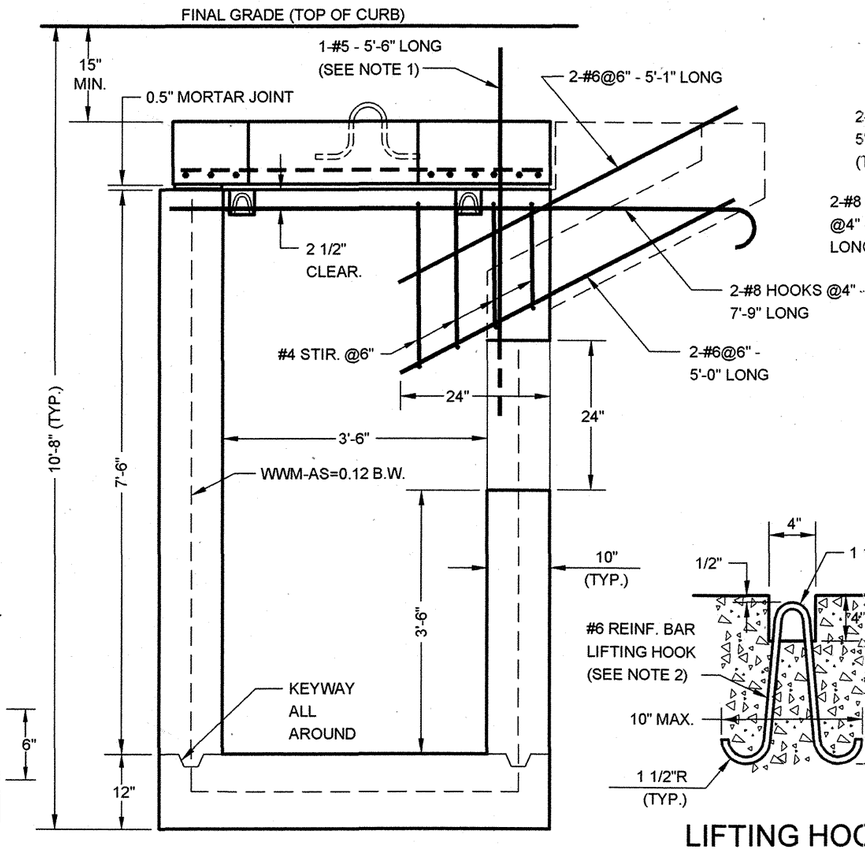

SECTION A-A

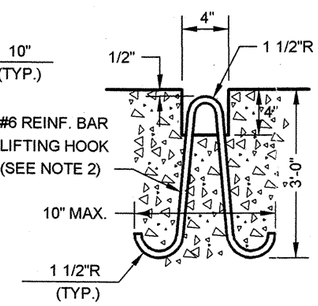

LIFTING HOOK DETAIL
(N.T.S.)

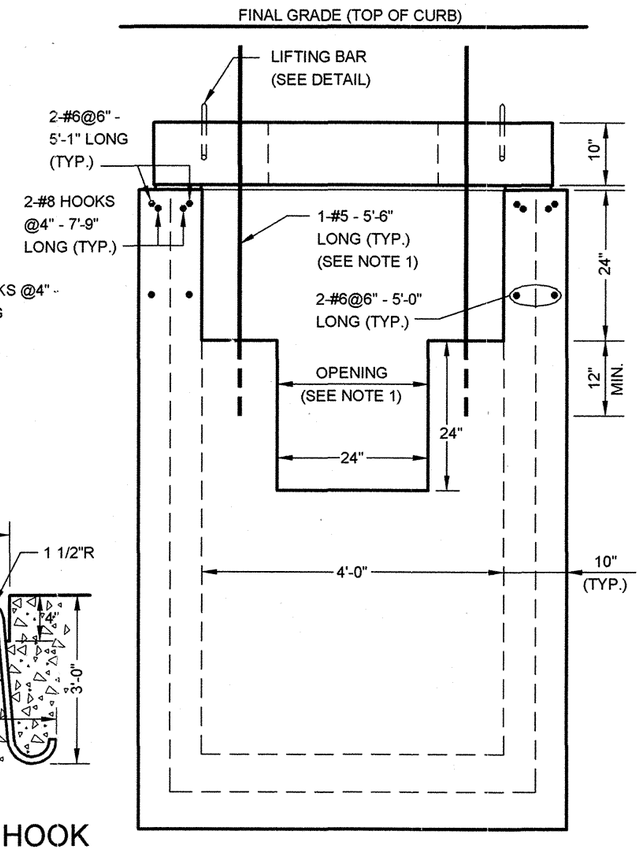

SECTION B-B

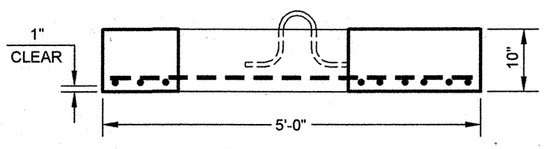

SECTION a-a
REMOVABLE PRECAST
TYPE 3 SLAB

NOTE:
ALL STEEL REINF. ARE #6 BARS.

NOTES:

(1) LOCATION OF OPENING SHALL BE DETERMINED PRIOR TO MANUFACTURE OF BASIN BY LOCATION & ANGLE OF BASIN CONNECTION REQUIRED DUE TO FIELD CONDITIONS & OPENING SHALL BE PLACED IN THE PROPER WALL AT THE TIME OF MANUFACTURE. IF LOCATION OF OPENING IS NOT IN THE FRONT WALL AS SHOWN, THE OPENING SHALL BE 24" X 24" WITH 2-#6@4" - 4'-9" LONG PLACED ABOVE OPENING; IN ADDITION, THE FRONT WALL SHALL BE MANUFACTURED SOLID & ADDITIONAL 2-#5@12" FOR CHUTE REINFORCEMENT SHALL BE PLACED AT THE TIME OF MANUFACTURE.

(2) LIFTING HOOKS SHALL BE LOCATED IN THE SECTION AS PER MANUFACTURERS RECOMMENDATIONS & GROUTED PRIOR TO BACKFILLING. (FOUR (4) LIFTING HOOKS SHALL BE PROVIDED & PLACED SYMMETRICALLY & IN SUCH A MANNER AS TO PROVIDE FOR THE EVEN LIFTING OF THE SECTION.)

(3) CONCRETE IS TO BE CLASS 40 AND 5% AIR ENTRAINED. REBARS-GRADE 60. WWM-FS=65,000 PSI.

(4) ALL REINFORCEMENT SHOWN AND SPECIFIED SHALL BE INTEGRALLY PLACED AT TIME OF MANUFACTURE.

Gregg W. Carar P.E. — 7/9/07
ASSISTANT COMMISSIONER, DESIGN
DEPARTMENT OF DESIGN AND CONSTRUCTION
DATE

Magdi Farag P.E. — 8/10/07
DIRECTOR OF ENGINEERING
DEPARTMENT OF ENVIRONMENTAL PROTECTION
DATE

REVISED AUGUST 2004: A. KHAN

SE55A

CITY OF NEW YORK
DEPARTMENT OF ENVIRONMENTAL PROTECTION

SE55A

STANDARD FOR PRECAST DOUBLE CATCH BASIN (DWG. 1 OF 2)

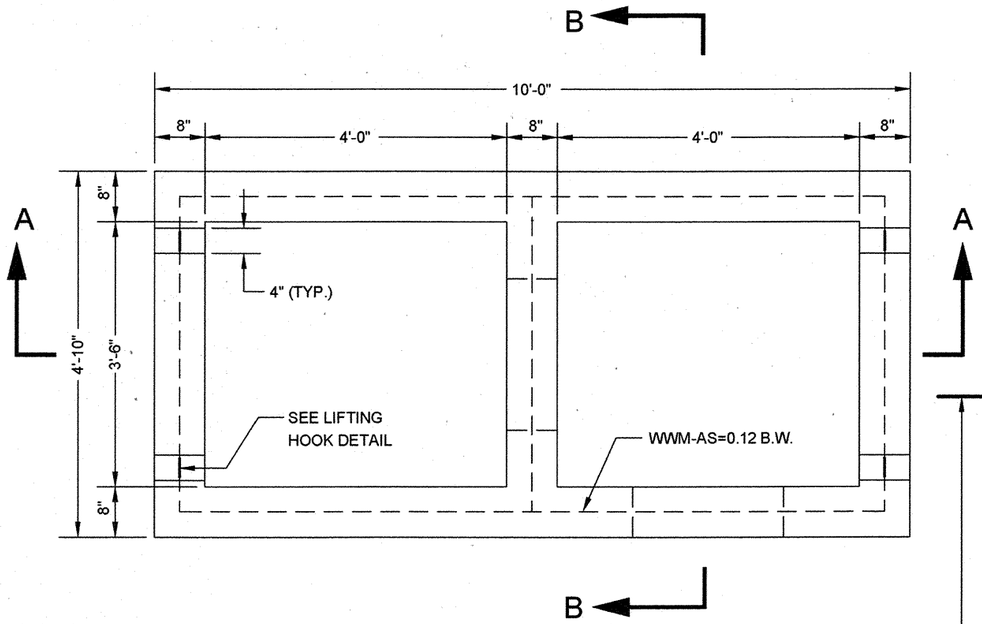

PLAN

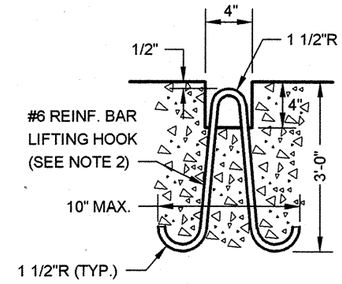

LIFTING HOOK DETAIL
(N.T.S.)

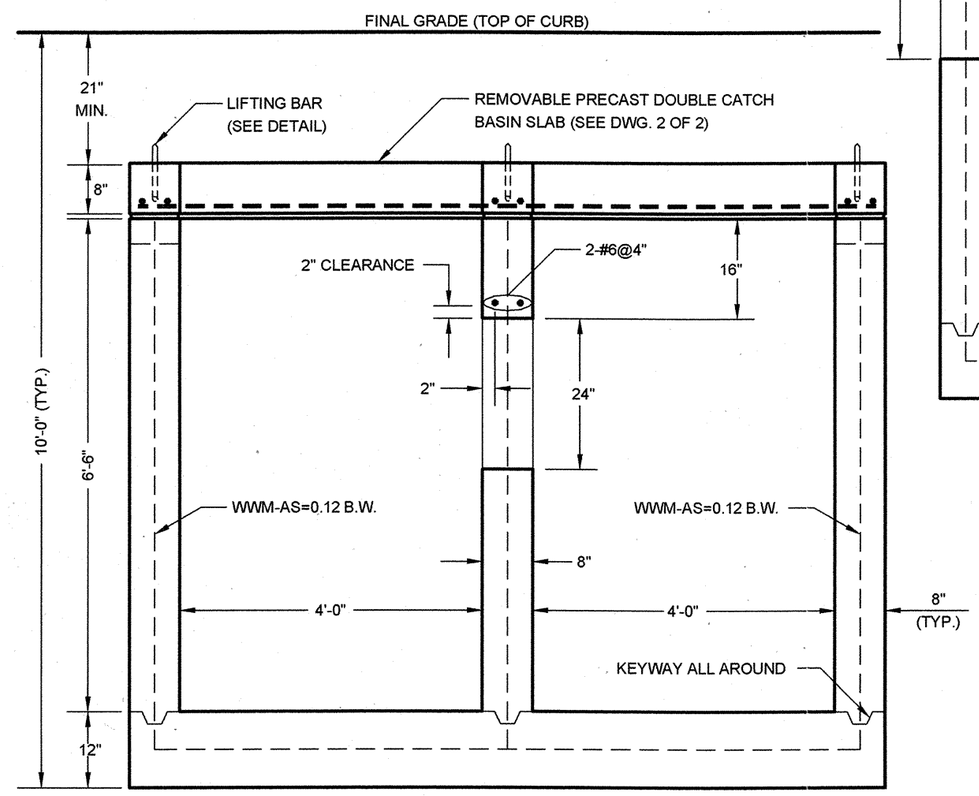

SECTION A-A

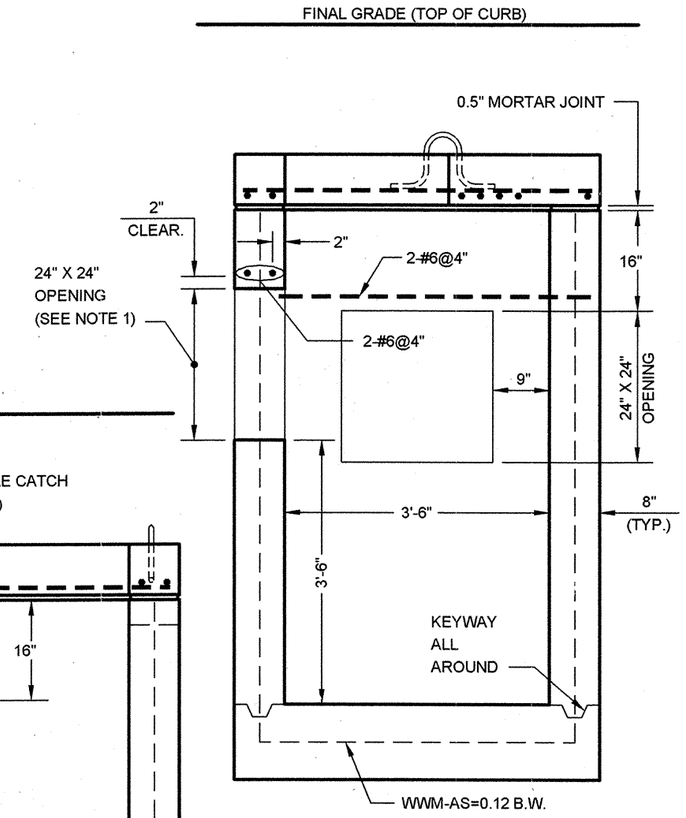

SECTION B-B

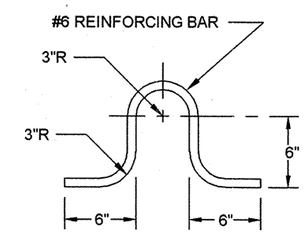

LIFTING BAR DETAIL

NOTES:

(1) LOCATION OF OPENING SHALL BE DETERMINED PRIOR TO MANUFACTURE OF BASIN BY LOCATION AND ANGLE OF BASIN CONNECTION REQUIRED DUE TO FIELD CONDITIONS AND OPENING SHALL BE PLACED IN THE PROPER WALL AT THE TIME OF MANUFACTURE.

(2) LIFTING HOOKS SHALL BE LOCATED IN THE SECTION AS PER MANUFACTURER'S RECOMMENDATIONS AND GROUTED PRIOR TO BACKFILLING. (FOUR (4) LIFTING HOOKS SHALL BE PROVIDED FOR EACH SECTION AND SHALL BE PLACED SYMMETRICALLY AND IN SUCH A MANNER AS TO PROVIDE FOR THE EVEN LIFTING OF THE SECTIONS.)

(3) CONCRETE IS TO BE CLASS 40 AND 5% AIR ENTRAINED. REBARS-GRADE 60. WWM-FS=65,000 PSI.

REVISED AUGUST 2004: A. KHAN

Jorge W. Caron P.E.
ASSISTANT COMMISSIONER, DESIGN
DEPARTMENT OF DESIGN AND CONSTRUCTION

7/9/07
DATE

Magdi Farag P.E.
DIRECTOR OF ENGINEERING
DEPARTMENT OF ENVIRONMENTAL PROTECTION

8/10/07
DATE

CITY OF NEW YORK
DEPARTMENT OF ENVIRONMENTAL PROTECTION

SE55B

STANDARD FOR PRECAST DOUBLE CATCH BASIN (DWG. 2 OF 2)

(REMOVABLE PRECAST DOUBLE CATCH BASIN SLAB)

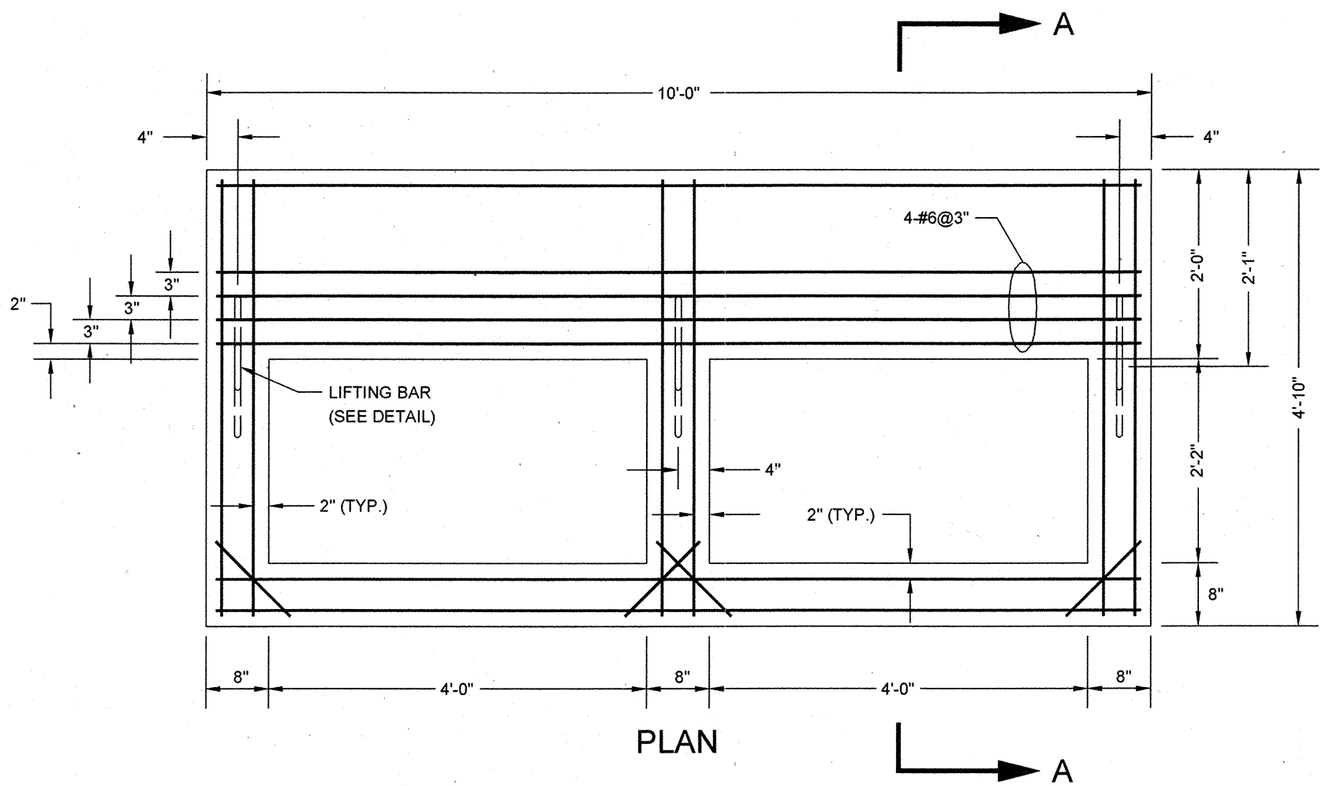

PLAN

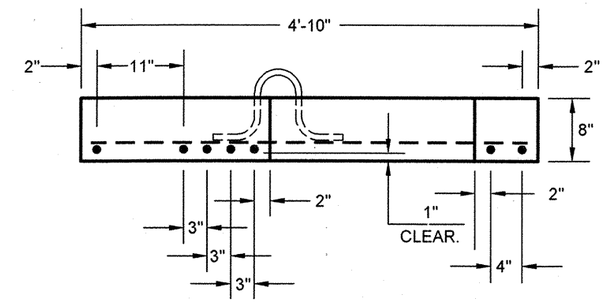

SECTION A-A

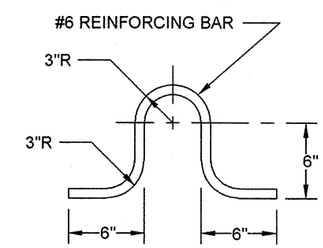

LIFTING BAR DETAIL

NOTES:

(1) ALL STEEL REINFORCEMENT ARE #6 BARS.

(2) CONCRETE IS TO BE CLASS 40. REBARS-GRADE 60.

Lyle W. Cann P.E. 7/9/07
ASSISTANT COMMISSIONER, DESIGN
DEPARTMENT OF DESIGN AND CONSTRUCTION
DATE

Maedi Farrell P.E. 8/10/07
DIRECTOR OF ENGINEERING
DEPARTMENT OF ENVIRONMENTAL PROTECTION
DATE

REVISED OCTOBER 2004: L. ADRIEN

SE57

CITY OF NEW YORK
DEPARTMENT OF ENVIRONMENTAL PROTECTION

STANDARD FOR CAST IRON FRAME FOR CATCH BASINS
(WITH CURB PIECE)

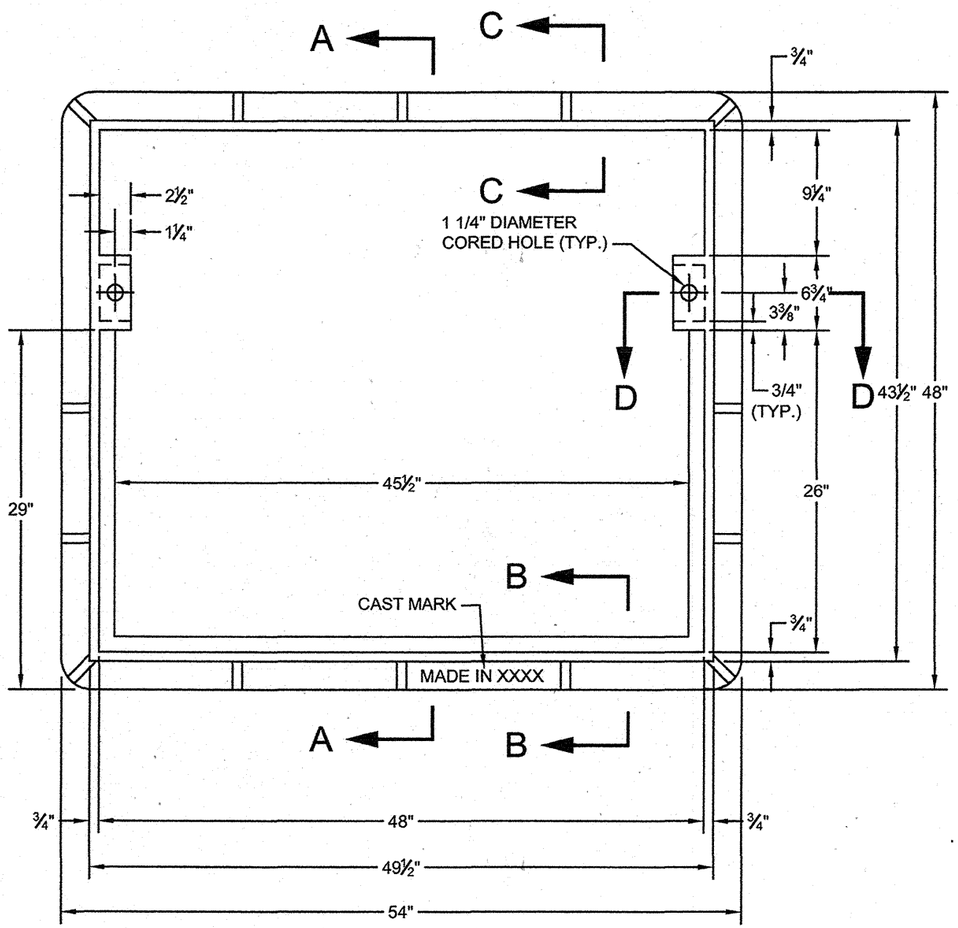

PLAN

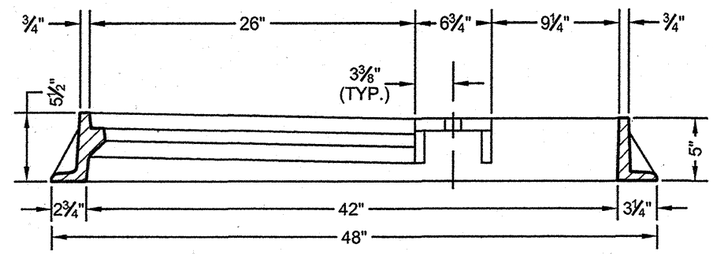

SECTION A-A

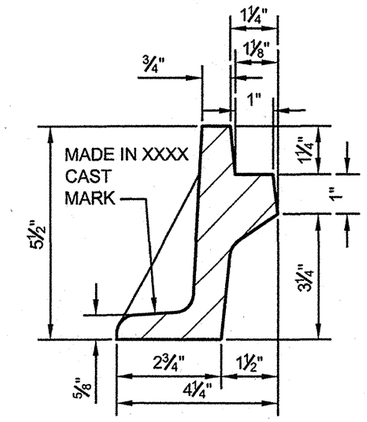

SECTION B-B

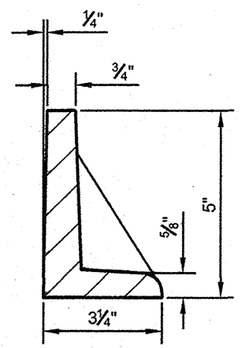

SECTION C-C

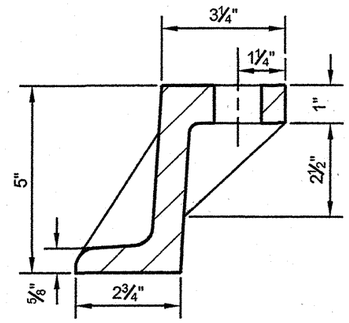

SECTION D-D

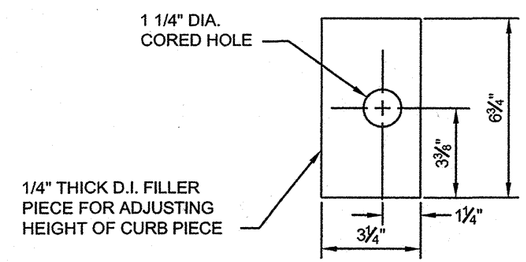

FILLER PIECE

NOTES:

(1) MATERIAL: GRAY CAST IRON ASTM A-48 CLASS 35B. MINIMUM WEIGHT OF FRAME IS 360 LBS.

(2) DESIGN LOADING: HS20-44 HIGHWAY LOADING.

(3) TWO (2) - 3/4" DIA. CARBON STEEL BOLTS ASTM 307 GRADE - 3 1/2" LONG WITH HEXAGONAL HEAD AND NUT WITH TWO (2) FLAT WASHERS PER BOLT TO BE FURNISHED WITH EACH FRAME TOGETHER WITH 6" CURB PIECE OR 8" CURB PIECE. LONGER BOLTS TO BE FURNISHED FOR CURB HEIGHTS GREATER THAN 6" WHERE FILLER PIECES ARE USED.

(4) ALL CATCH BASIN FRAMES SHALL HAVE THE MANUFACTURER'S IDENTIFICATION, CAST DATE OR HEAT NUMBER AND COUNTRY OF ORIGIN INTEGRALLY CAST INDIVIDUAL PIECES AT THE TIME OF MANUFACTURE IN ACCORDANCE WITH THE DEP SPECIFICATION.

Gurdip S. Saini P.E.
ASSISTANT COMMISSIONER, DESIGN
DEPARTMENT OF DESIGN AND CONSTRUCTION

1/30/09
DATE

P.E.
DIRECTOR OF ENGINEERING
DEPARTMENT OF ENVIRONMENTAL PROTECTION

1/30/09
DATE

REVISED JANUARY 2009: L. ADRIEN

SE58

CITY OF NEW YORK
DEPARTMENT OF ENVIRONMENTAL PROTECTION

STANDARD FOR CAST IRON FRAME FOR CATCH BASINS
(WITHOUT CURB PIECE)

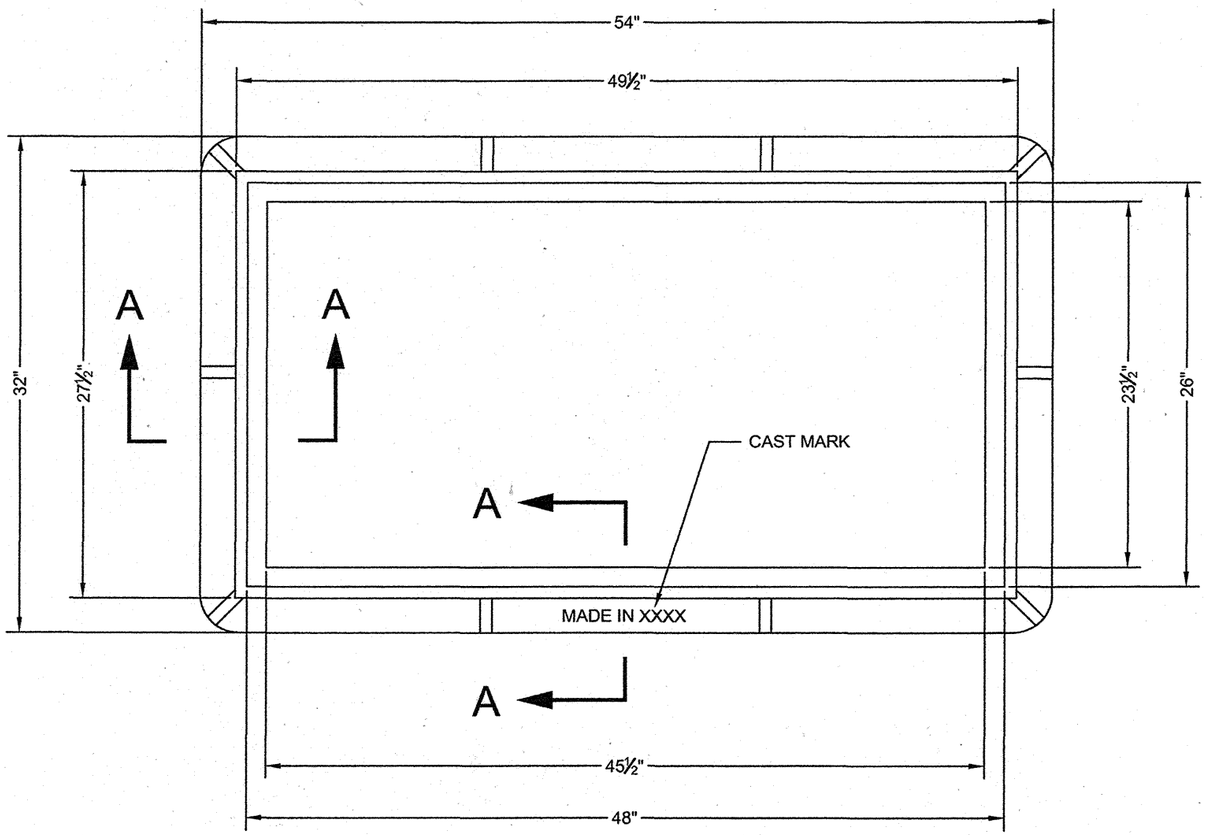

PLAN

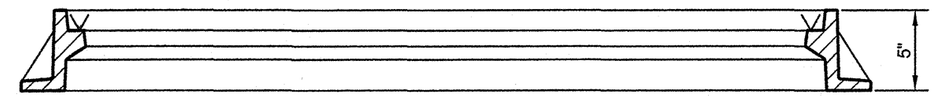

SECTION

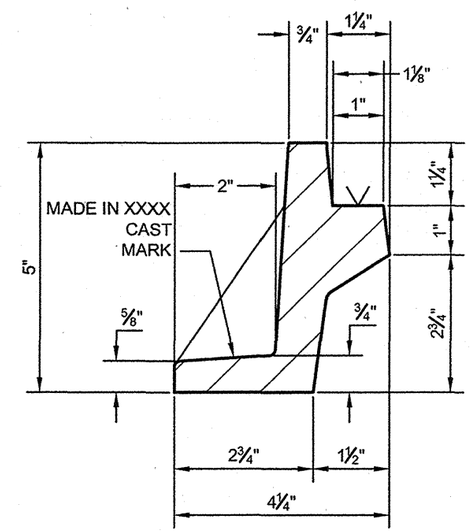

SECTION A-A

NOTES:

(1) MATERIAL: GRAY CAST IRON ASTM A-48 CLASS 35B. MINIMUM WEIGHT OF FRAME IS 275 LBS.

(2) DESIGN LOADING: HS20-44 HIGHWAY LOADING.

(3) ALL FRAMES SHALL HAVE THE MANUFACTURER'S IDENTIFICATION, CAST DATE OR HEAT NUMBER AND COUNTRY OF ORIGIN INTEGRALLY CAST ON INDIVIDUAL PIECES AT THE TIME OF MANUFACTURE IN ACCORDANCE WITH THE DEP SPECIFICATION.

Andy S. Sainin P.E.
ASSISTANT COMMISSIONER, DESIGN
DEPARTMENT OF DESIGN AND CONSTRUCTION

1/30/09
DATE

Mazdi Farah P.E.
DIRECTOR OF ENGINEERING
DEPARTMENT OF ENVIRONMENTAL PROTECTION

1/30/09
DATE

REVISED JANUARY 2009: L. ADRIEN

CITY OF NEW YORK
DEPARTMENT OF ENVIRONMENTAL PROTECTION

STANDARD FOR CAST IRON GRATING, BACK PLATE, AND CURB PIECE FOR CATCH BASINS

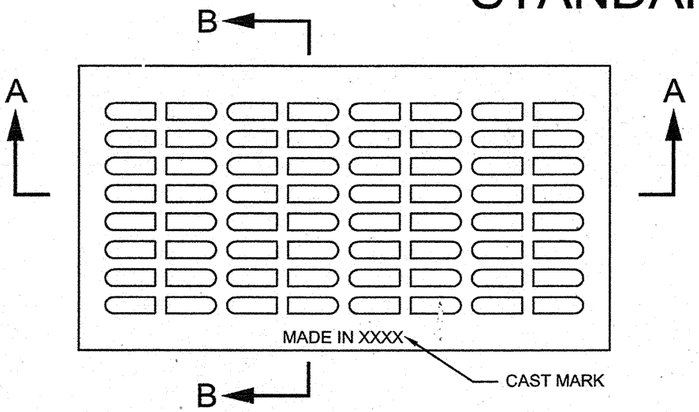

PLAN OF GRATING

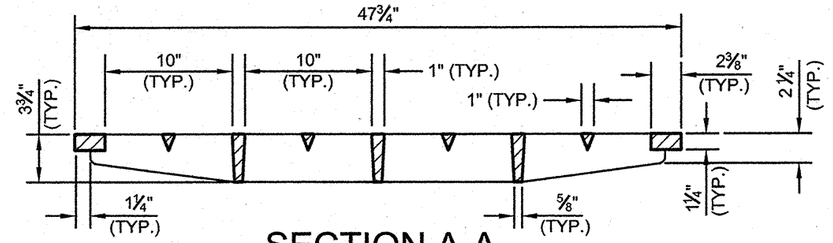

SECTION A-A

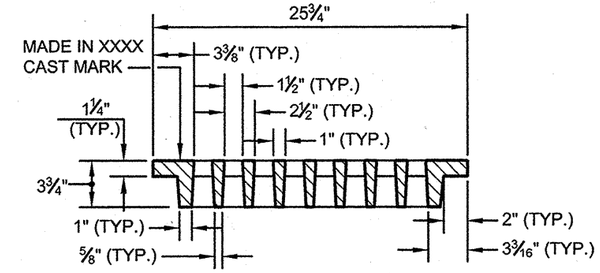

SECTION B-B

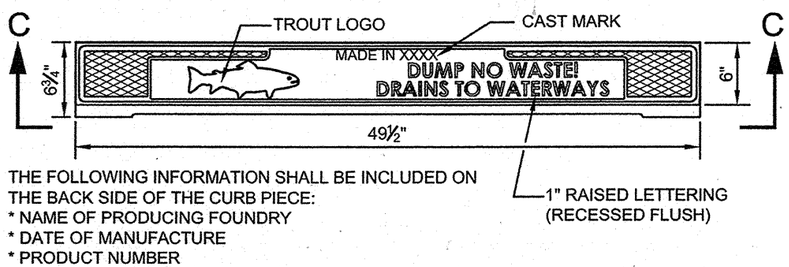

THE FOLLOWING INFORMATION SHALL BE INCLUDED ON THE BACK SIDE OF THE CURB PIECE:
* NAME OF PRODUCING FOUNDRY
* DATE OF MANUFACTURE
* PRODUCT NUMBER
* CAST IRON ASTM A-48

PLAN OF CURB PIECE

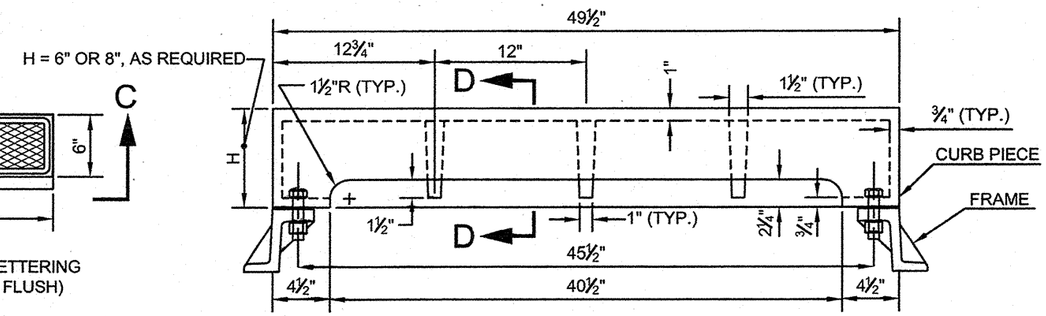

SECTION C-C
ELEVATION OF CURB PIECE

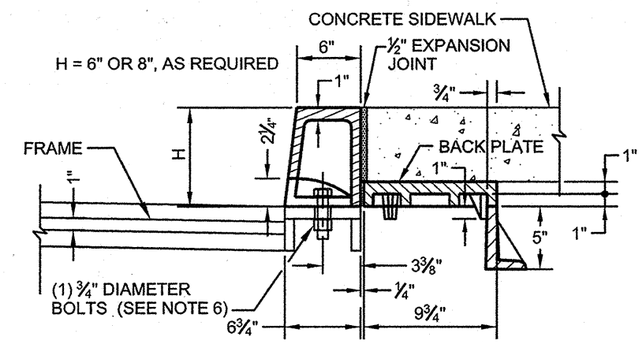

SECTION D-D

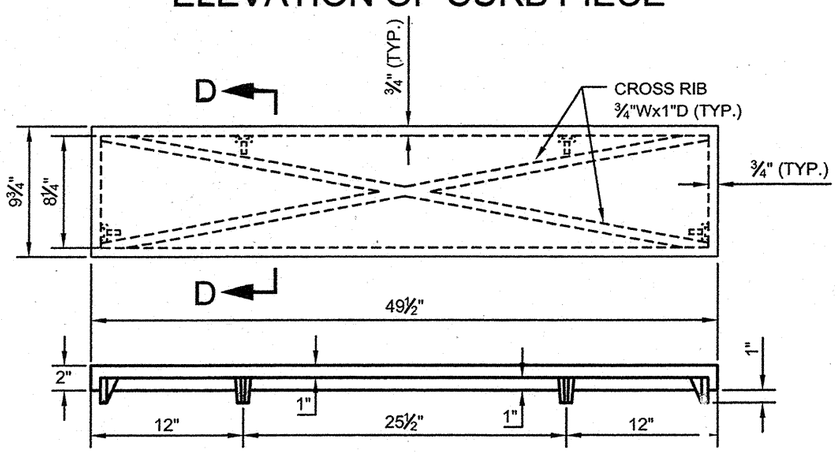

BACK PLATE

THE FOLLOWING INFORMATION SHALL BE INCLUDED ON THE TOP SIDE OF THE BACK PLATE:
* NAME OF PRODUCING FOUNDRY
* DATE OF MANUFACTURE
* PRODUCT NUMBER
* CAST IRON ASTM A-48

NOTES:

(1) GRATING MATERIAL: GRAY CAST IRON ASTM A-48 CLASS 35B.
MINIMUM WEIGHT OF TYPE R GRATING IS 425 LBS.

(2) CURB PIECE MATERIAL: GRAY CAST IRON ASTM A-48 CLASS 35B.
MINIMUM WEIGHT OF 6" IS 172 LBS.
MINIMUM WEIGHT OF 8" IS 219 LBS.

(3) BACK PLATE MATERIAL: GRAY CAST IRON ASTM A-48 CLASS 35B.
MINIMUM WEIGHT IS 178 LBS.

(4) DESIGN LOADING: HS20-44 HIGHWAY LOADING.

(5) ALL MANHOLE FRAMES AND COVERS SHALL HAVE THE MANUFACTURER'S IDENTIFICATION, CAST DATE OR HEAT NUMBER AND COUNTRY OF ORIGIN INTEGRALLY CAST ON INDIVIDUAL PIECES AT THE TIME OF MANUFACTURE IN ACCORDANCE WITH THE DEP SPECIFICATION.

(6) TWO (2) - 3/4" DIA. CARBON STEEL BOLTS ASTM 307 GRADE - 3 1/2" LONG WITH HEXAGONAL HEAD AND NUT WITH TWO (2) FLAT WASHERS PER BOLT TO BE FURNISHED WITH EACH FRAME TOGETHER WITH 6" CURB PIECE OR 8" CURB PIECE.

Sandip S. Saini P.E.
ASSISTANT COMMISSIONER, DESIGN
DEPARTMENT OF DESIGN AND CONSTRUCTION

1/30/09
DATE

P.E.
DIRECTOR OF ENGINEERING
DEPARTMENT OF ENVIRONMENTAL PROTECTION

1/30/09
DATE

REVISED JANUARY 2009: L. ADRIEN

SE60

CITY OF NEW YORK
DEPARTMENT OF ENVIRONMENTAL PROTECTION

STANDARD FOR CAST IRON HOOD AND HOOKS FOR CATCH BASINS

SE60

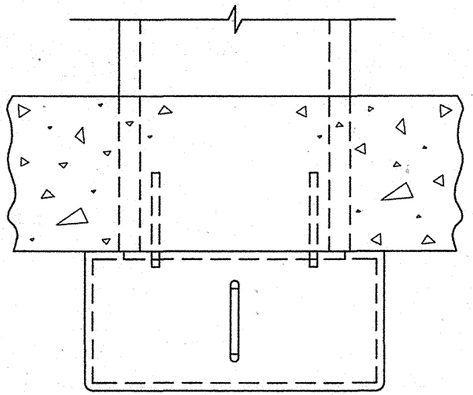

PLAN OF HOOD IN PLACE

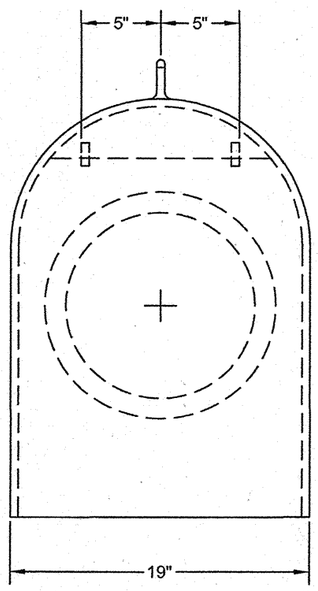

REAR ELEVATION OF HOOD IN PLACE

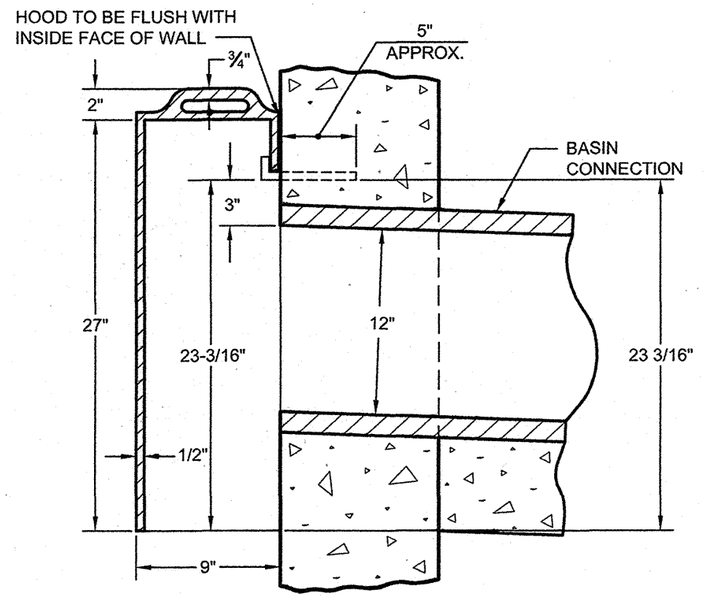

SECTION OF HOOD IN PLACE

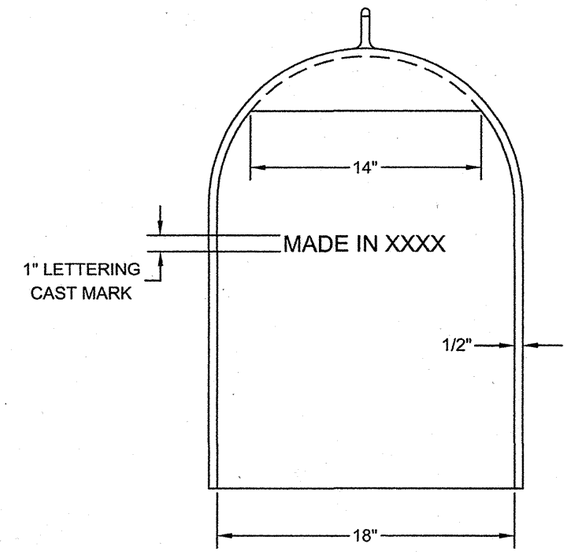

FRONT ELEVATION OF HOOD

NOTES:

(1) MATERIAL FOR HOOD: GRAY CAST IRON ASTM A-48 CLASS 35B. MINIMUM WEIGHT OF HOOD IS 140 LBS.

(2) MATERIAL FOR HOOK: 18-8 STAINLESS STEEL 1/2" SQUARE BAR STOCK TYPE 303 ASTM A-582.

(3) ALL CATCH BASIN HOODS SHALL HAVE THE MANUFACTURER'S IDENTIFICATION, CAST DATE OR HEAT NUMBER AND COUNTRY OF ORIGIN INTEGRALLY CAST ON INDIVIDUAL PIECES AT THE TIME OF MANUFACTURE IN ACCORDANCE WITH THE DEP SPECIFICATION.

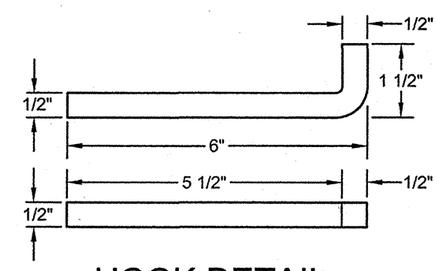

HOOK DETAIL
(2 REQUIRED)

Gurbir S. Saini P.E.
ASSISTANT COMMISSIONER, DESIGN
DEPARTMENT OF DESIGN AND CONSTRUCTION

1/30/09
DATE

Magdi Farag P.E.
DIRECTOR OF ENGINEERING
DEPARTMENT OF ENVIRONMENTAL PROTECTION

1/30/09
DATE

REVISED JANUARY 2009: L. ADRIEN

CITY OF NEW YORK
DEPARTMENT OF ENVIRONMENTAL PROTECTION

SE61

STANDARD FOR DUCTILE IRON PIPE ALTERNATE

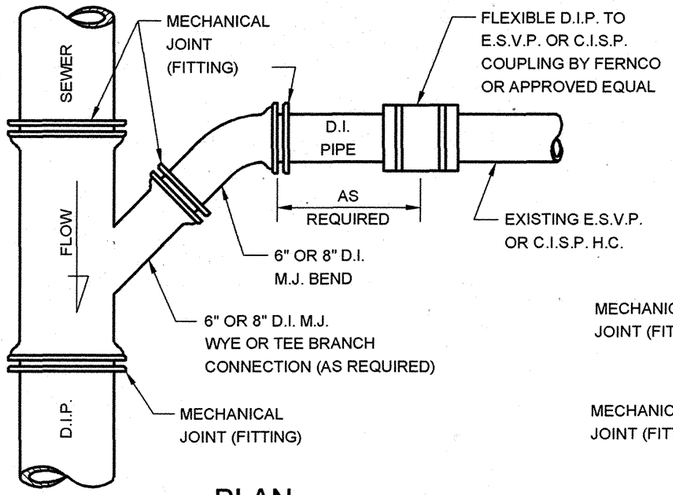

PLAN
TYPICAL HOUSE CONNECTION (D.I.P.) OFF D.I.P. SEWER

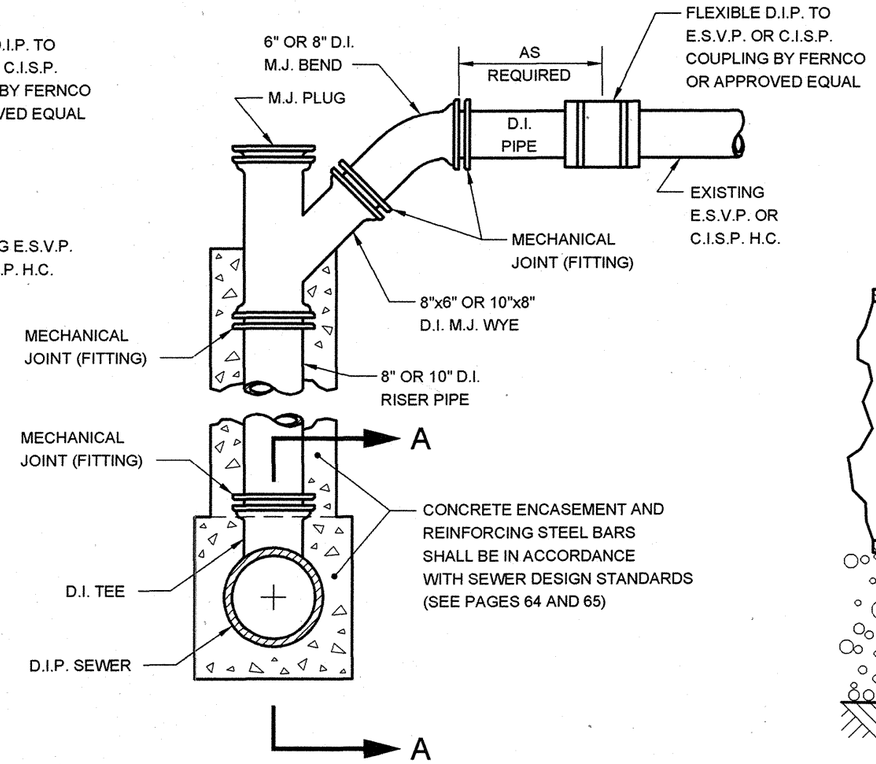

TYPICAL D.I.P. RISER FOR HOUSE CONNECTION OFF D.I.P. SEWER

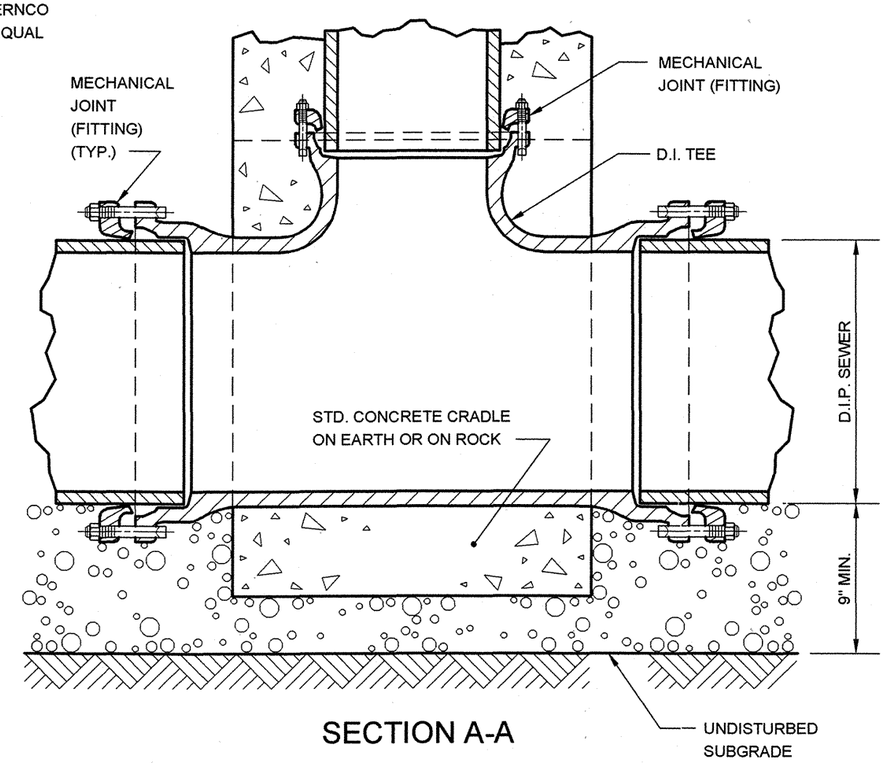

SECTION A-A

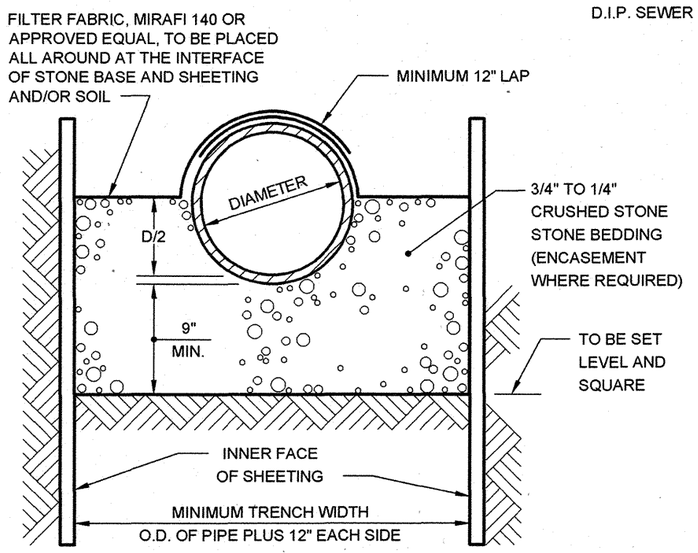

NOTES:

(1) THIS ALTERNATE WILL BE PERMITTED ONLY WHEN SO STATED IN THE SPECIFICATIONS.

(2) MATERIAL: THE DUCTILE IRON PIPE SHALL BE 60-42-10 GRADE AND CLASS 56, UNLESS OTHERWISE SPECIFIED. THE DUCTILE IRON PIPE SHALL BE LINED WITH CERAMIC EPOXY.

(3) JOINTS: (A) ALL JOINTS FOR DUCTILE IRON PIPE SEWERS SHALL BE "PUSH-ON" JOINT TYPE, EXCEPT AS NOTED ABOVE FOR SPUR AND RISER PIPE WHICH SHALL BE MECHANICAL JOINT TYPE, MEETING THE REQUIREMENTS OF ANSI STANDARD A.21.11, LATEST REVISION.

(B) JOINTS SHALL BE MADE IN ACCORDANCE WITH MANUFACTURER'S INSTRUCTIONS FOR ASSEMBLING THE TYPE OF JOINT FURNISHED.

(C) FITTINGS SHALL BE DUCTILE IRON OR GRAY IRON (250 PSI) MECHANICAL JOINTS IN ACCORDANCE WITH THE LATEST REVISIONS OF ANSI/AWWA C110/A21.10 AND ANSI/AWWA C111/A21.11.

(4) LEVELING BLOCKS ARE NOT PERMITTED.

PIPE DIA.	
FOR E.S.V.P	USE D.I.P.
15"	16"

SUBSTITUTION CHART

P.E.
ASSISTANT COMMISSIONER, DESIGN
DEPARTMENT OF DESIGN AND CONSTRUCTION

7/9/07
DATE

P.E.
DIRECTOR OF ENGINEERING
DEPARTMENT OF ENVIRONMENTAL PROTECTION

8/10/07
DATE

REVISED OCOTBER 2004: L. ADRIEN

CITY OF NEW YORK
DEPARTMENT OF ENVIRONMENTAL PROTECTION

SE62

STANDARD FOR HOUSE CONNECTIONS

(FOR 6" AND 8" DIA. CAST IRON SOIL PIPE OR VITRIFIED CLAY PIPE ON CONCRETE CRADLE OR ENCASED IN CONCRETE ON EARTH OR ON ROCK)

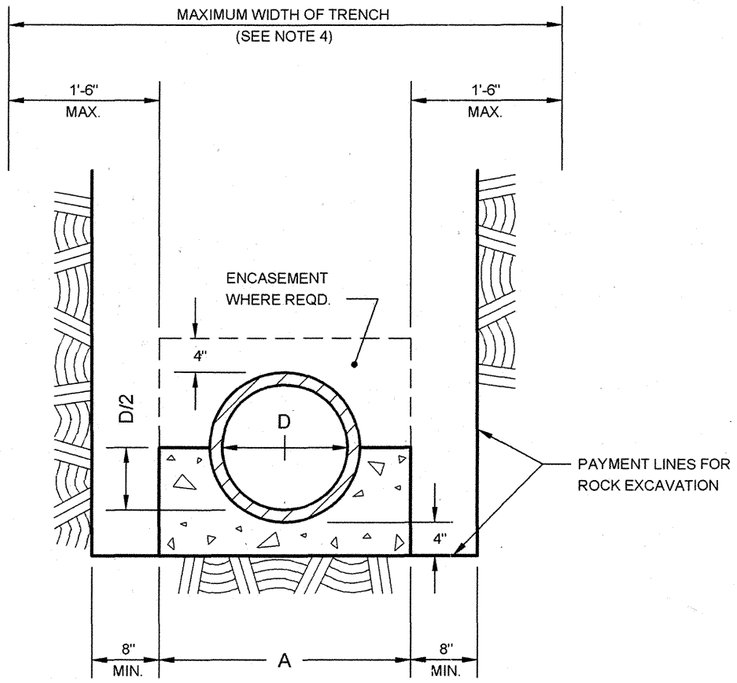

SECTION ON ROCK

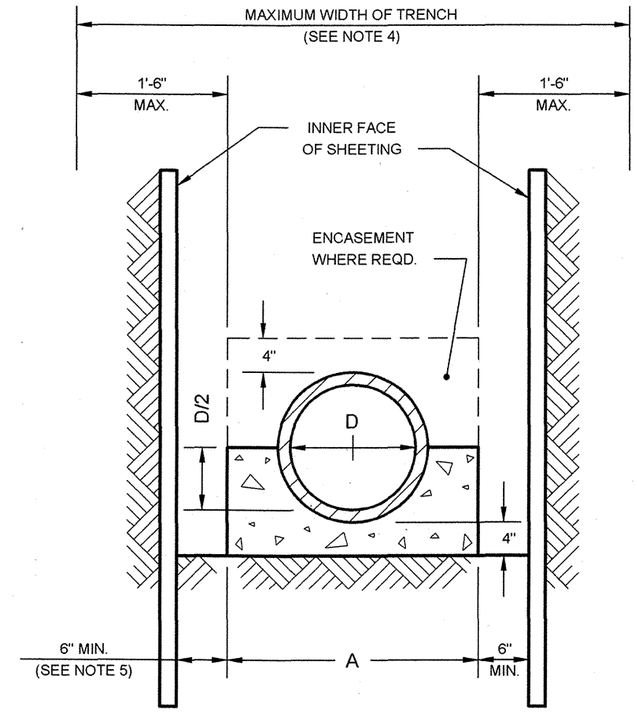

SECTION ON EARTH

NOTES:

(1) CRADLE AND ENCASEMENT ARE CLASS 40 CONCRETE FOR ALL HOUSE CONNECTIONS.

(2) ENTIRE CRADLE OR ENCASEMENT IS TO BE PLACED MONOLITHICALLY.

(3) ENCASEMENT REQUIRED ON H.C. PIPE WHICH HAS A COVER, FROM FINAL GRADE TO THE OUTER TOP OF THE PIPE, OF LESS THAN THREE (3) FEET OR WHEN THE UPPER LIMIT OF COVER IS EXCEEDED.

(4) UNLESS OTHERWISE APPROVED BY THE ENGINEER, THE MAXIMUM WIDTH OF TRENCH BETWEEN INNER FACES OF THE LOWEST STAGE OF SHEETING OR ROCK CUT LINES, FROM SUBGRADE OF TRENCH TO A MINIMUM HEIGHT OF TWO (2) FEET ABOVE THE OUTER TOP OF THE PIPE, SHALL NOT EXCEED THE WIDTH OF THE CRADLE BY MORE THAN THREE (3) FEET (1'-6" MAXIMUM EACH SIDE OF CRADLE).

(5) SIX (6) INCH MINIMUM SHALL BE MAINTAINED AT ALL TIMES, EXCEPT WHERE SHEETING IS TO BE USED AS FORMWORK.

D	A	MAX. COVER WITHOUT ENCSMT.	CONC. CRADLE CU. YD./L.F.	CONC. ENCSMT. CU. YD./L.F.
6"	1'-4"	20'	0.0262	0.0523
8"	1'-6"	22'	0.0315	0.0630

P.E.
ASSISTANT COMMISSIONER, DESIGN
DEPARTMENT OF DESIGN AND CONSTRUCTION

7/9/07
DATE

P.E.
DIRECTOR OF ENGINEERING
DEPARTMENT OF ENVIRONMENTAL PROTECTION

8/10/07
DATE

REVISED OCTOBER 2004: L. ADRIEN

CITY OF NEW YORK
DEPARTMENT OF ENVIRONMENTAL PROTECTION

SE63

STANDARD FOR RISER ON 10" DIA. TO 18" DIA. VITRIFIED CLAY PIPE SEWERS ON CONCRETE CRADLE

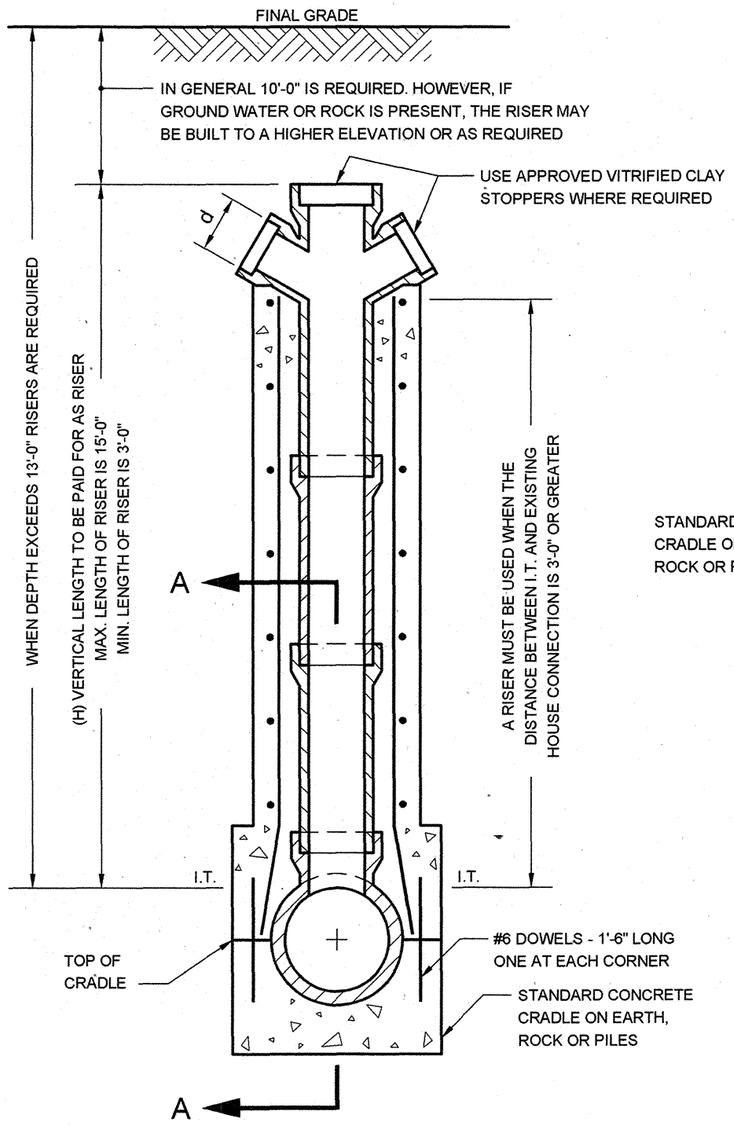

SECTION VIEW

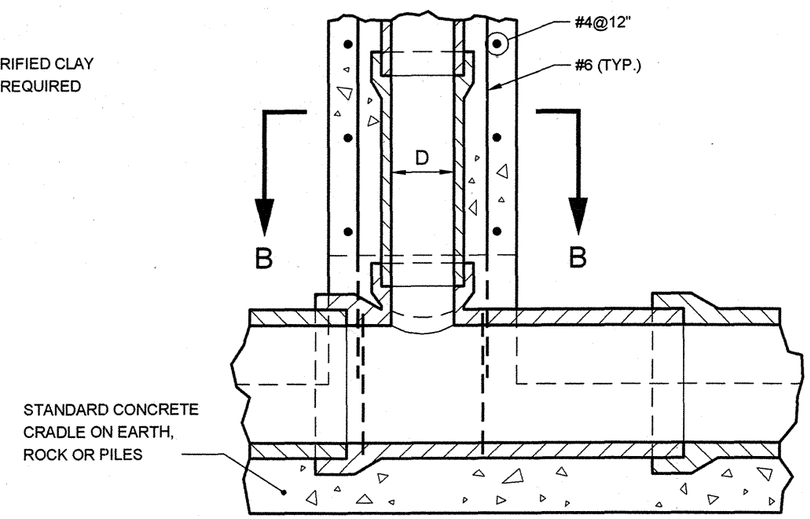

SECTION A-A

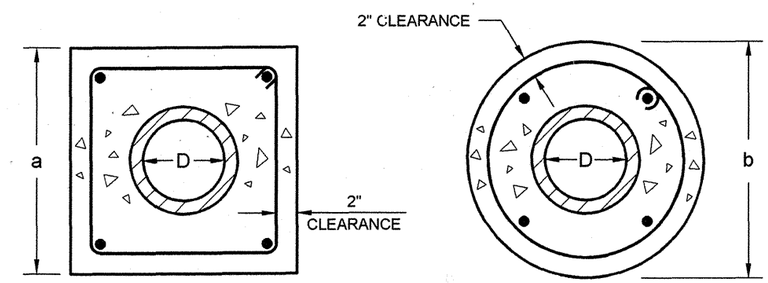

SQUARE CIRCULAR

SHAPE OF ENCASEMENT TO BE OPTIONAL

SECTION B-B

NOTES:

(1) ALL PIPES AND FITTINGS SHALL BE EXTRA STRENGTH FULL DIAMETER VITRIFIED CLAY.

(2) THE COST OF ADDITIONAL CONCRETE, STEEL REINFORCEMENT BARS AND VITRIFIED CLAY RISER PIPE AND FITTINGS REQUIRED SHALL BE INCLUDED IN THE PRICE BID FOR RISERS.

(3) KEYED CONSTRUCTION JOINTS ARE REQUIRED BETWEEN ANY SUCCESSIVE POURS.

(4) USE STANDARD "Y" OR "DOUBLE Y" FITTING AS REQUIRED.

(5) CONCRETE IS TO BE CLASS 40. REBARS-GRADE 60.

D	d	a	b
8"	6"	22"	23"
10"	8"	24"	25"

REVISED OCTOBER 2004: L. ADRIEN

P.E.
ASSISTANT COMMISSIONER, DESIGN
DEPARTMENT OF DESIGN AND CONSTRUCTION

7/9/07
DATE

P.E.
DIRECTOR OF ENGINEERING
DEPARTMENT OF ENVIRONMENTAL PROTECTION

8/10/07
DATE

CITY OF NEW YORK
DEPARTMENT OF ENVIRONMENTAL PROTECTION

SE64

STANDARD FOR RISER ON PRECAST REINFORCED CONCRETE PIPE SEWERS ON CONCRETE CRADLE

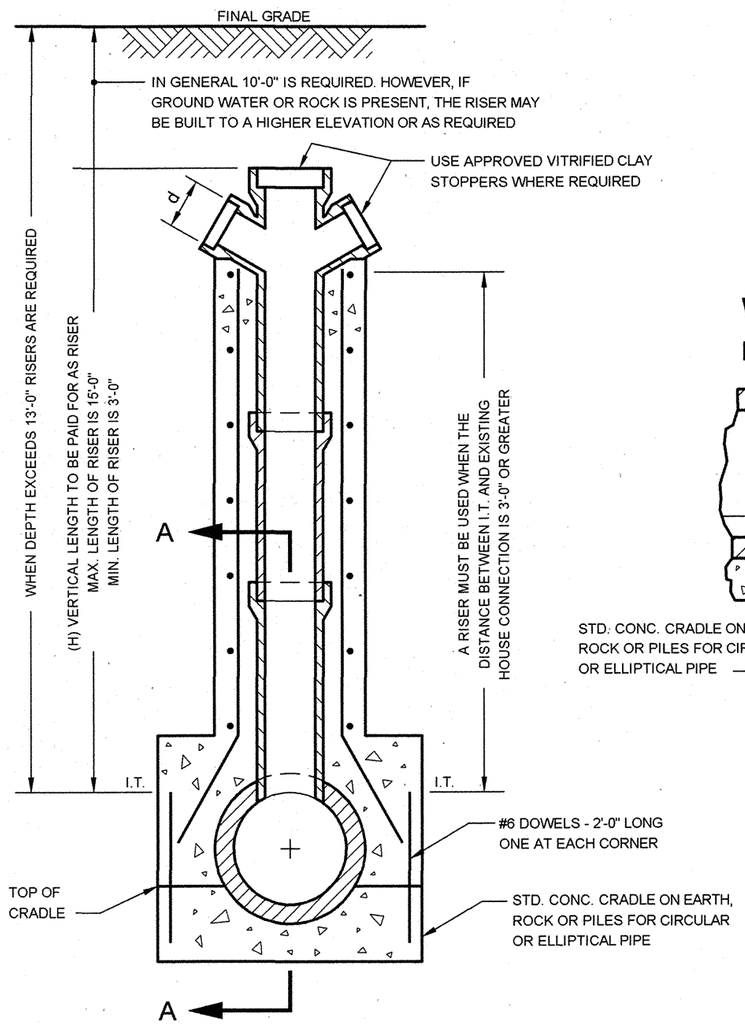

SECTION VIEW

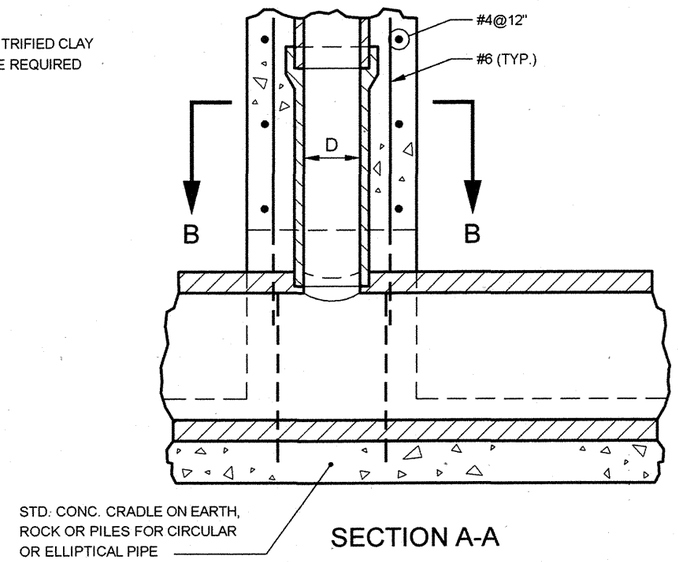

SECTION A-A

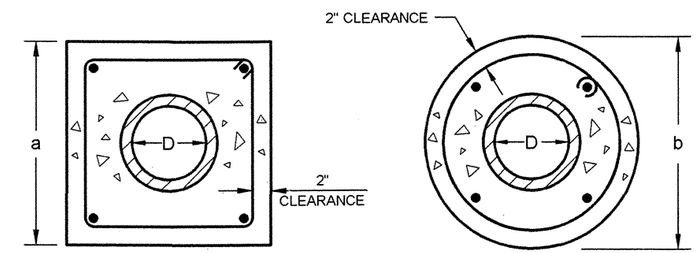

SQUARE CIRCULAR

SHAPE OF ENCASEMENT TO BE OPTIONAL

SECTION B-B

NOTES:

(1) ALL PIPES AND FITTINGS SHALL BE EXTRA STRENGTH FULL DIAMETER VITRIFIED CLAY.

(2) THE COST OF ADDITIONAL CONCRETE, STEEL REINFORCEMENT BARS AND VITRIFIED CLAY RISER PIPE AND FITTINGS REQUIRED SHALL BE INCLUDED IN THE PRICE BID FOR RISERS.

(3) KEYED CONSTRUCTION JOINTS ARE REQUIRED BETWEEN ANY SUCCESSIVE POURS.

(4) USE STANDARD "Y" OR "DOUBLE Y" FITTING AS REQUIRED.

(5) CONCRETE IS TO BE CLASS 40. REBARS-GRADE 60.

D	d	a	b
8"	6"	22"	23"
10"	8"	24"	25"

Gregg W. Carson P.E.
ASSISTANT COMMISSIONER, DESIGN
DEPARTMENT OF DESIGN AND CONSTRUCTION

7/9/07
DATE

Magdi Farah P.E.
DIRECTOR OF ENGINEERING
DEPARTMENT OF ENVIRONMENTAL PROTECTION

8/10/07
DATE

REVISED OCTOBER 2004: L. ADRIEN

SE65

CITY OF NEW YORK
DEPARTMENT OF ENVIRONMENTAL PROTECTION

SE65

STANDARD FOR 27" DIAMETER ALUMINUM FLOOR GRATING

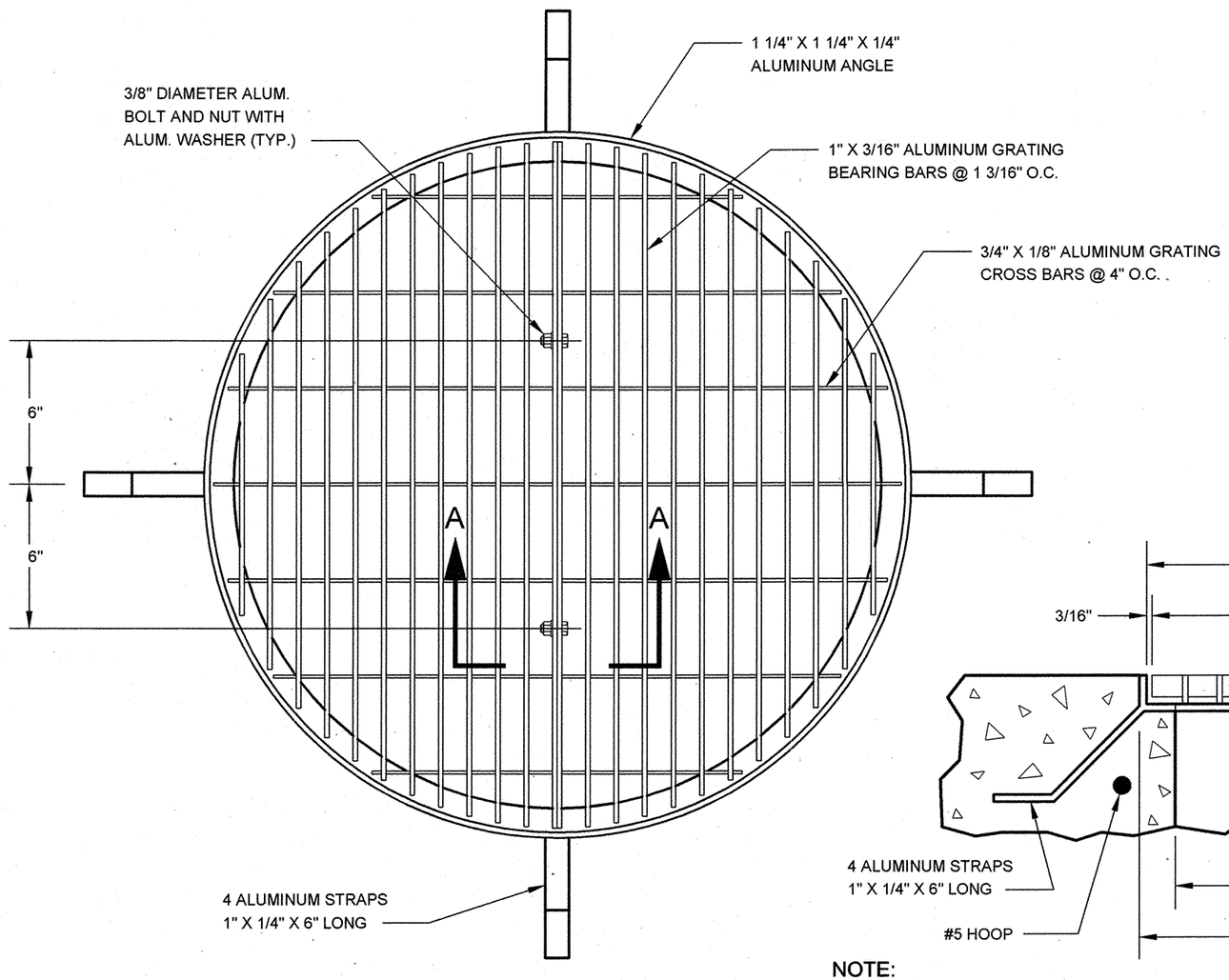

PLAN

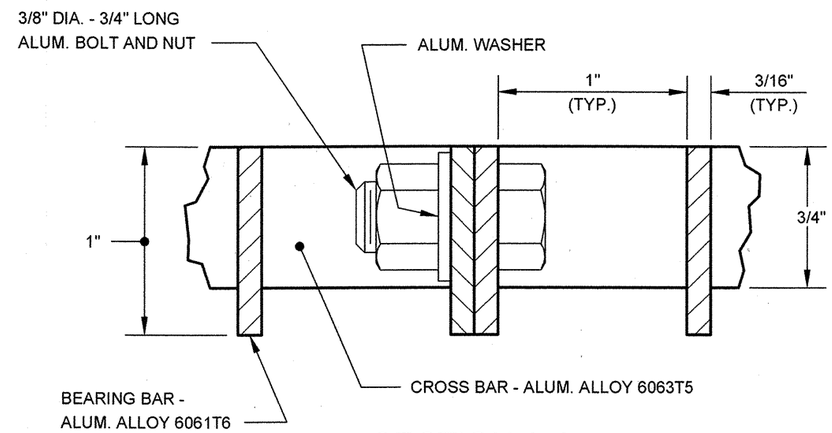

SECTION A-A

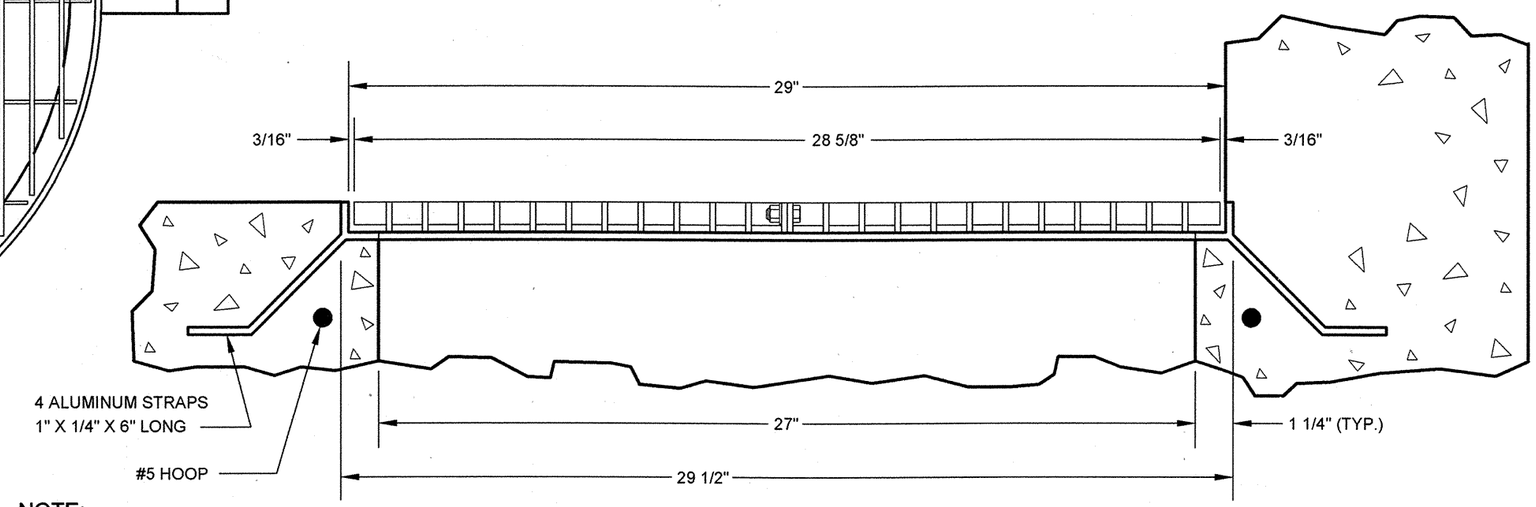

SECTION

NOTE:

(1) THE FRAME IS TO HAVE A HEAVY COAT OF BITUMINOUS PAINT, OR OTHER APPROVED INSULATING MATERIAL.

(2) TYPE "A" OR TYPE "B" ALUMINUM GRATINGS MAY BE USED. HOWEVER, ONE TYPE OF GRATING SHALL BE USED EXCLUSIVELY THROUGHOUT ANY PROJECT.

Gregg W. Cavan P.E.
ASSISTANT COMMISSIONER, DESIGN
DEPARTMENT OF DESIGN AND CONSTRUCTION

7/9/07
DATE

Magdi Farag P.E.
DIRECTOR OF ENGINEERING
DEPARTMENT OF ENVIRONMENTAL PROTECTION

8/10/07
DATE

REVISED OCTOBER 2004: L. ADRIEN

SE66

CITY OF NEW YORK
DEPARTMENT OF ENVIRONMENTAL PROTECTION

SE66

STANDARD FOR 36" DIAMETER ALUMINUM FLOOR GRATING

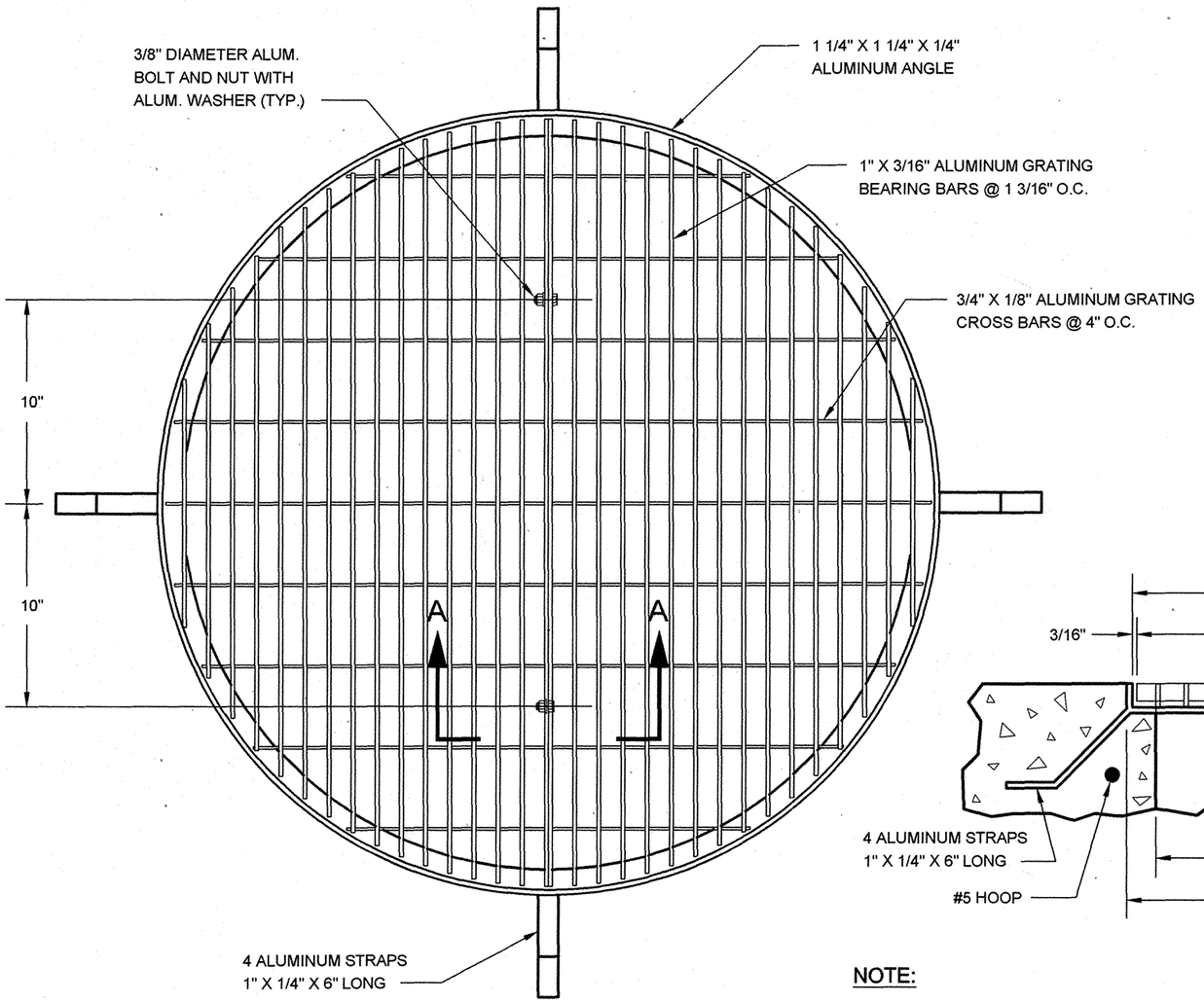

PLAN

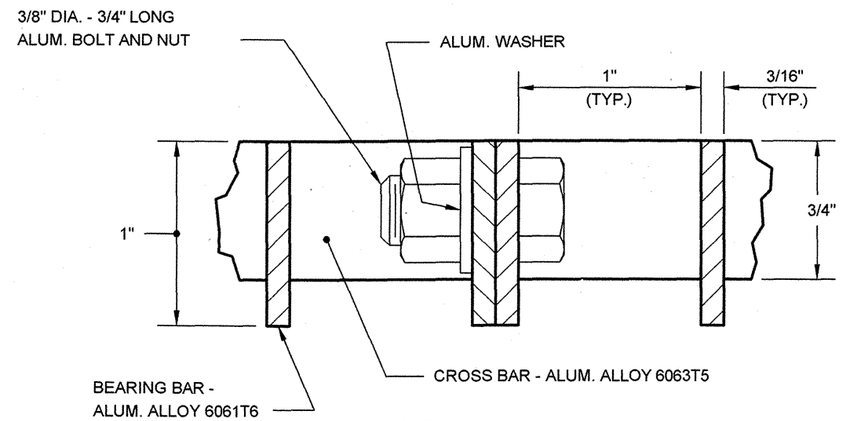

SECTION A-A

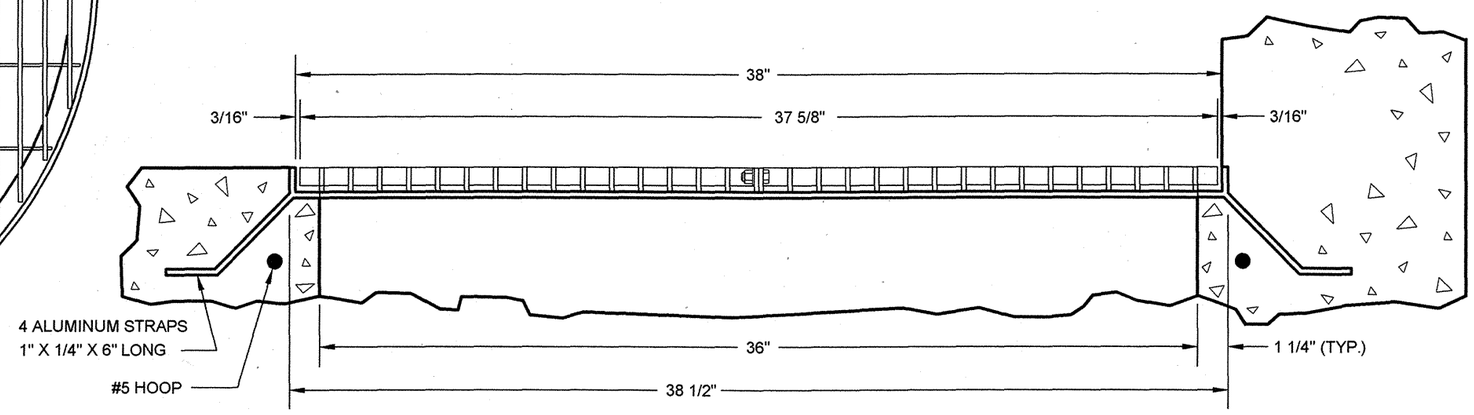

SECTION

NOTE:

(1) THE FRAME IS TO HAVE A HEAVY COAT OF BITUMINOUS PAINT, OR OTHER APPROVED INSULATING MATERIAL.

(2) TYPE "A" OR TYPE "B" ALUMINUM GRATINGS MAY BE USED. HOWEVER, ONE TYPE OF GRATING SHALL BE USED EXCLUSIVELY THROUGHOUT ANY PROJECT.

Gregg W. Carson P.E. — 7/9/07
ASSISTANT COMMISSIONER, DESIGN
DEPARTMENT OF DESIGN AND CONSTRUCTION
DATE

Macdi Farrell P.E. — 8/10/07
DIRECTOR OF ENGINEERING
DEPARTMENT OF ENVIRONMENTAL PROTECTION
DATE

REVISED OCTOBER 2004: L. ADRIEN

SE67

CITY OF NEW YORK
DEPARTMENT OF ENVIRONMENTAL PROTECTION

SE67

STANDARD FOR CONSTRUCTION OF CATCH BASIN

(NO EXISTING CURB)

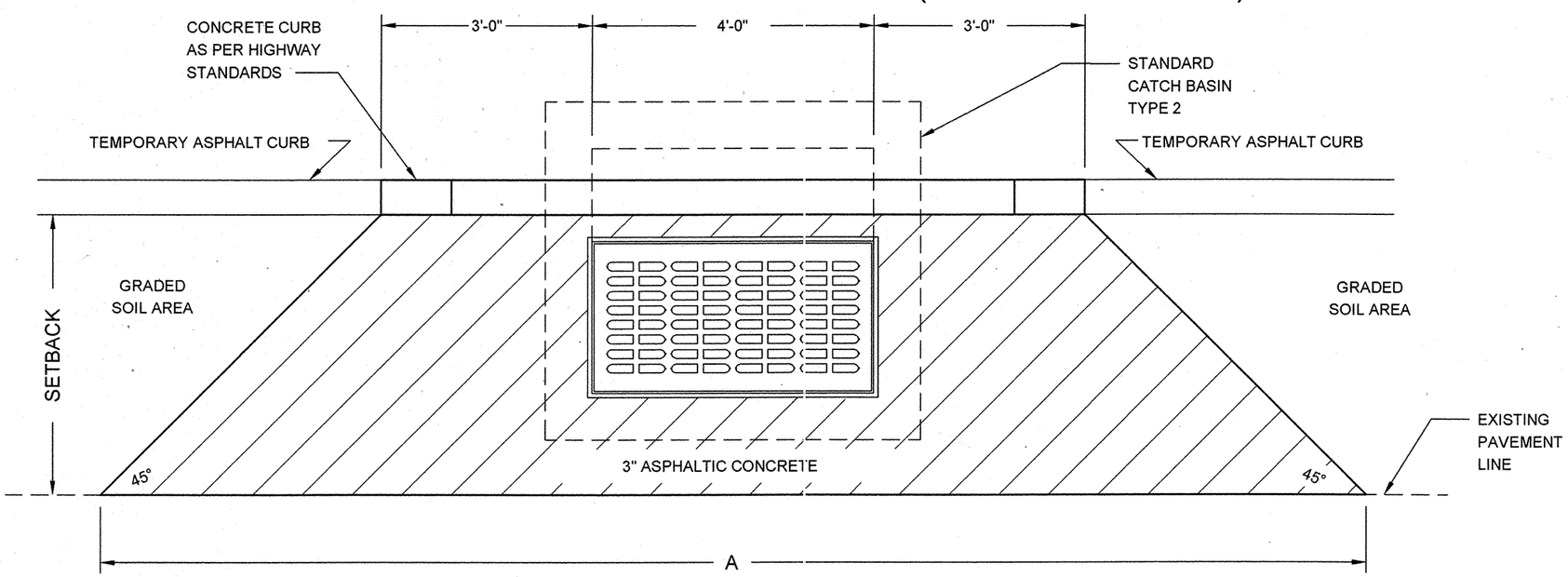

PLAN

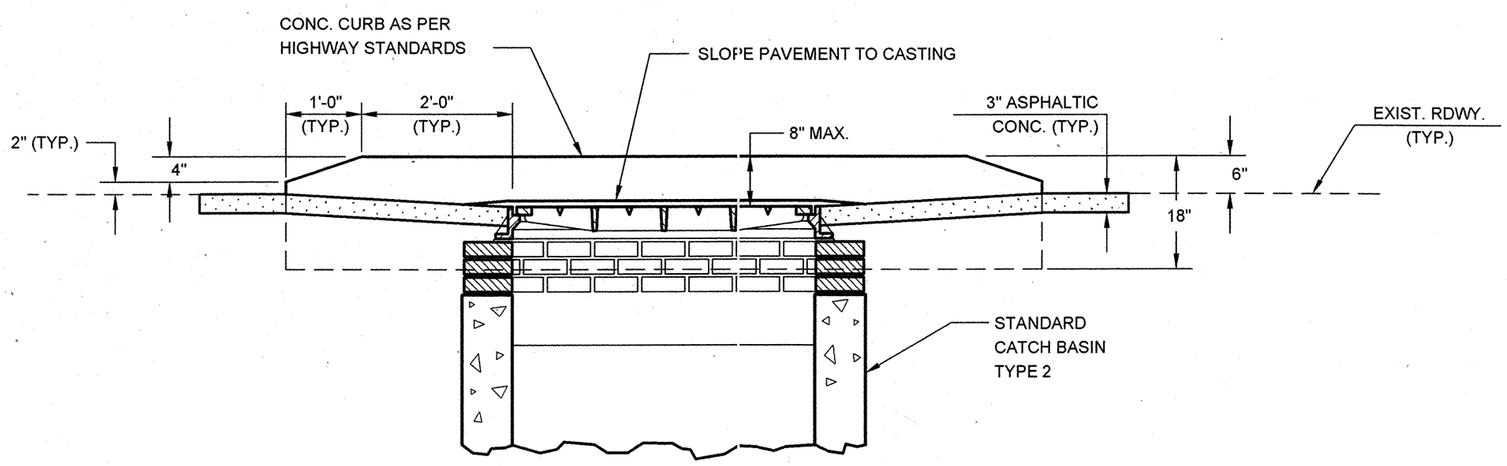

SECTION

SETBACK	A	ASPH. CONC. SQ. YDS.
3'-0"	16'-0"	3.283
4'-0"	18'-0"	5.172
5'-0"	20'-0"	7.283
6'-0"	22'-0"	9.617
7'-0"	24'-0"	12.172
8'-0"	26'-0"	14.950
9'-0"	28'-0"	17.950
10'-0"	30'-0"	21.172

Gege W. Carron P.E.
ASSISTANT COMMISSIONER, DESIGN
DEPARTMENT OF DESIGN AND CONSTRUCTION

7/9/07
DATE

Maedi Fara P.E.
DIRECTOR OF ENGINEERING
DEPARTMENT OF ENVIRONMENTAL PROTECTION

8/10/07
DATE

REVISED OCTOBER 2004: L. ADRIEN

CITY OF NEW YORK
DEPARTMENT OF ENVIRONMENTAL PROTECTION

SE68

STANDARD FOR RECONSTRUCTION OF EXISTING MANHOLE AND REPLACEMENT OF EXISTING M.H. FRAME AND COVER

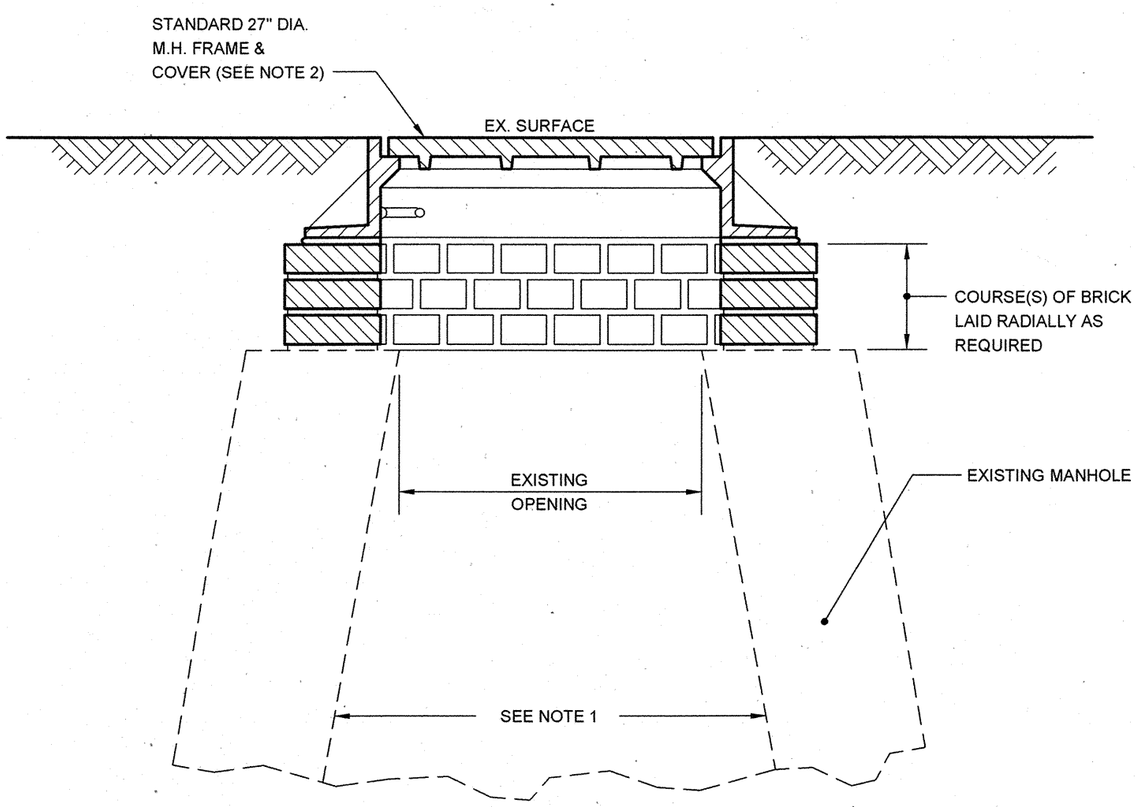

NOTES:

(1) AT ALL LOCATIONS SHOWN ON THE PLANS, SPECIFIED IN THE CONTRACT DOCUMENTS OR ORDERED BY THE RESIDENT ENGINEER REQUIRING THE RECONSTRUCTION OF EXISTING MANHOLES, THE FOLLOWING WORK SHALL BE PERFORMED:

(A) ON GUNITED SEWERS:

FROM THE INNER TOP OF THE LARGEST SEWER TO THE BOTTOM OF THE CASTING, ALL LOOSE AND MISSING BRICK, MASONRY OR CONCRETE SHALL BE REPAIRED AND/OR REMOVED AS DIRECTED BY THE RESIDENT ENGINEER AND ALL DEBRIS, EXCESS MORTAR, ETC. SHALL BE REMOVED SO THAT THE FACE OF THE MANHOLE WALLS IS LEFT SMOOTH AND CLEAN. IF ANY STEP(S) IS DAMAGED OR UNSAFE, ALL THE STEPS IN THE MANHOLE CHIMNEY SHALL BE REMOVED AND NOT REPLACED. FINALLY, THE WHOLE AREA SHALL BE PARGED OR FLASHED (RECEIVE A ONE HALF (1/2) INCH MINIMUM FINISHING COAT OF MORTAR WITH A FLOAT FINISH).

(B) ON LINED SEWERS:

FROM THE INVERT OF THE MANHOLE TO THE BOTTOM OF THE CASTING, ALL LOOSE AND MISSING BRICK, MASONRY OR CONCRETE SHALL BE REPAIRED AND/OR REMOVED AS DIRECTED BY THE RESIDENT ENGINEER AND ALL DEBRIS, EXCESS MORTAR, ETC. SHALL BE REMOVED SO THAT THE FACES OF THE MANHOLE WALLS AND THE INVERT ARE LEFT SMOOTH AND CLEAN. IF ANY STEP(S) IS DAMAGED OR UNSAFE, ALL STEPS IN THE MANHOLE CHIMNEY SHALL BE REMOVED AND NOT REPLACED. FINALLY, THE WHOLE AREA SHALL BE PARGED OR FLASHED (RECEIVE A ONE HALF (1/2) INCH MINIMUM FINISHING COAT OF MORTAR WITH A FLOAT FINISH). (THE INVERT DISH SHALL RECEIVE A PROPORTIONATELY THICKER FINISH COAT SO AS TO PROVIDE A SMOOTH TRANSITION FROM EXISTING SEWER TO THE INSIDE SURFACE OF THE LINER.)

(2) AT ALL LOCATIONS SHOWN ON THE PLANS, SPECIFIED IN THE CONTRACT DOCUMENTS OR ORDERED BY THE RESIDENT ENGINEER REQUIRING THE REPLACEMENT OF EXISTING MANHOLE FRAMES AND COVERS, THE CONTRACTOR SHALL REMOVE EXISTING MANHOLE FRAMES AND COVERS WHICH ARE TWENTY FOUR (24) INCHES IN DIAMETER OR OTHERWISE DAMAGED, DEFECTIVE OR NONSTANDARD AND REPLACE THEM WITH NEW STANDARD TWENTY SEVEN (27) INCH CAST IRON MANHOLE FRAMES AND COVERS.

Leg W. Carver P.E. 7/9/07
ASSISTANT COMMISSIONER, DESIGN
DEPARTMENT OF DESIGN AND CONSTRUCTION
DATE

Magdi Farag P.E. 8/10/07
DIRECTOR OF ENGINEERING
DEPARTMENT OF ENVIRONMENTAL PROTECTION
DATE

REVISED OCTOBER 2004: L. ADRIEN

CITY OF NEW YORK
DEPARTMENT OF ENVIRONMENTAL PROTECTION

STANDARD FOR ROADWAY RESURFACING

(PAVEMENT KEY - TYPE B)

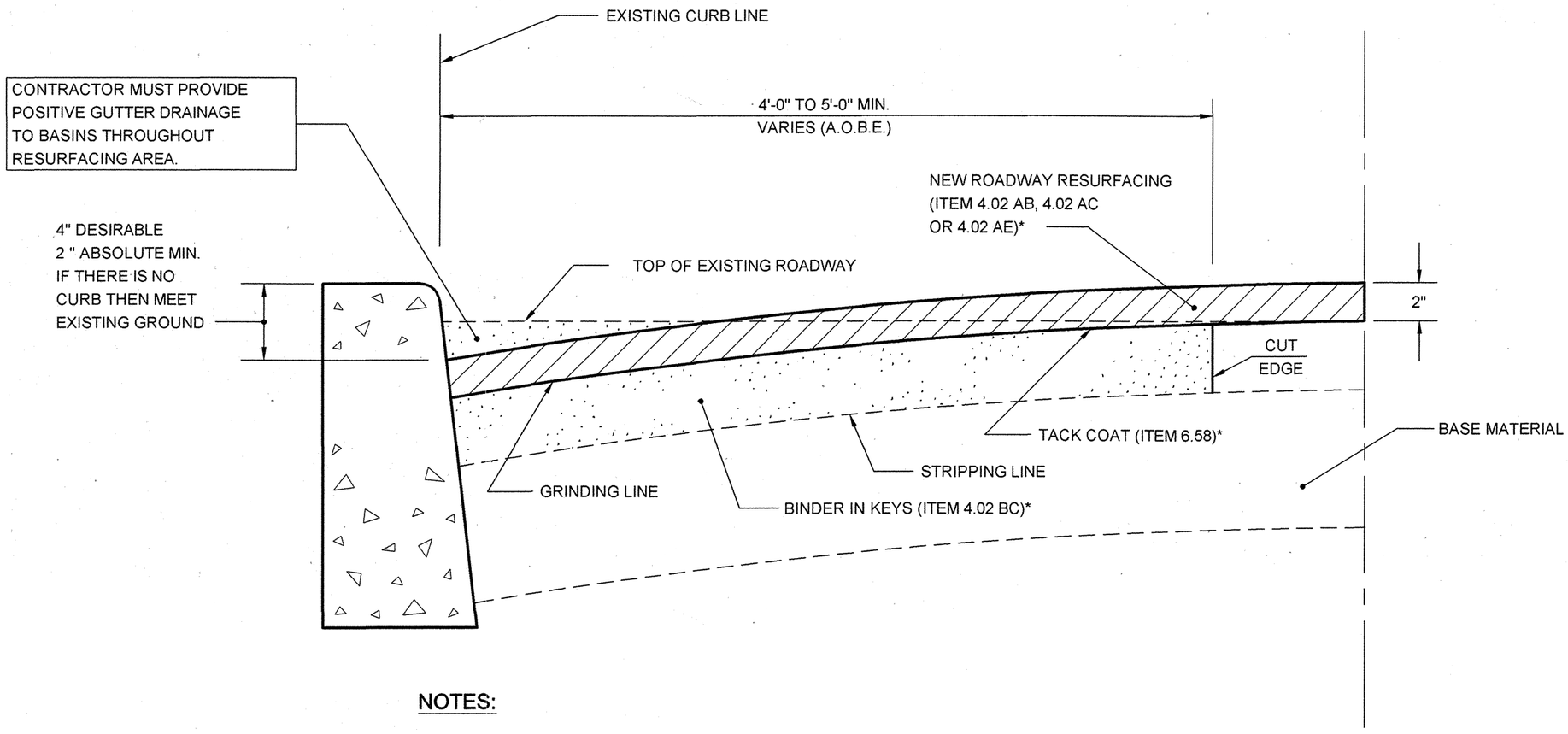

NOTES:

(1) CONTRACTOR MAY AT HIS OPTION EITHER STRIP OR GRIND THE AREA TO THE REQUIRED DEPTH.

(2) ALL CITY OWNED CASTINGS TO BE ADJUSTED TO MATCH NEW ROADWAY.

(3) PAVEMENT KEY IS TYPE B (6.51)*.

(4) (A.O.B.E.) - AS ORDERED BY ENGINEER.

(5) * - REFER TO DEPARTMENT OF TRANSPORTATION SPECIFICATIONS. (6) ALL COSTS REQUIRED TO PERFORM THIS WORK SHALL BE DEEMED INCLUDED IN THE PRICE BID PER TON FOR ASPHALT CONCRETE MIXTURE. NO SEPARATE OR ADDITIONAL PAYMENT WILL BE MADE FOR THIS WORK.

Eige W. Caron P.E.
ASSISTANT COMMISSIONER, DESIGN
DEPARTMENT OF DESIGN AND CONSTRUCTION

7/9/07
DATE

Maedi Farah P.E.
DIRECTOR OF ENGINEERING
DEPARTMENT OF ENVIRONMENTAL PROTECTION

8/10/07
DATE

REVISED OCTOBER 2004: L. ADRIEN

SE69

CITY OF NEW YORK
DEPARTMENT OF ENVIRONMENTAL PROTECTION

SE70

STANDARD FOR MINIMUM LOAD DIAGRAM FOR NON-WATERTIGHT SHEETING DESIGN

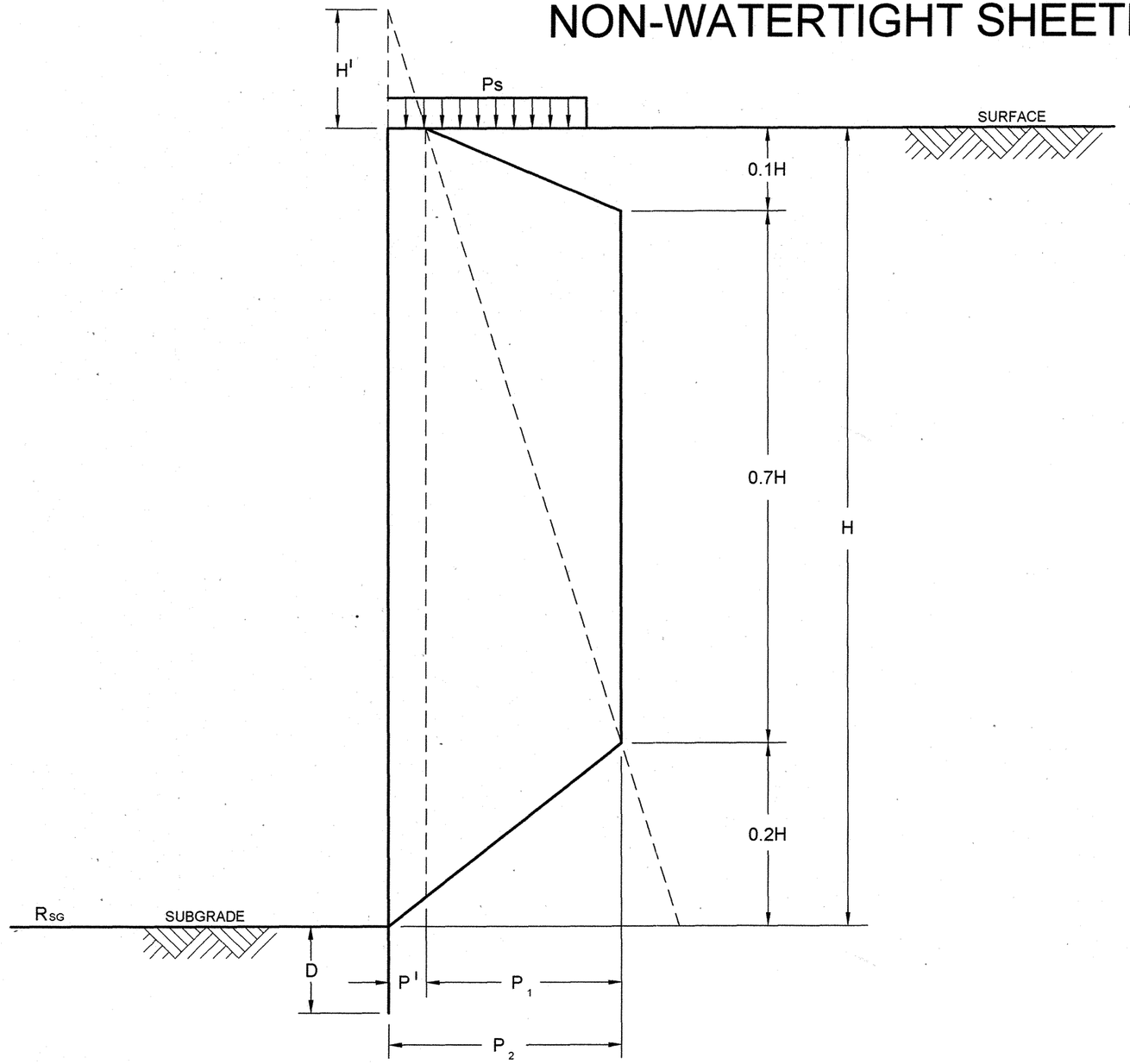

DESIGN CRITERIA:

γ = UNIT WEIGHT OF SOIL

γ_w = UNIT WEIGHT OF WATER

γ_s = UNIT WEIGHT OF SUBMERGED SOIL

Ø = ANGLE OF INTERNAL FRICTION OF SOIL

$Kra = \frac{(1-\sin Ø)}{(1+\sin Ø)}$ FOR ACTIVE EARTH PRESSURE

$Krp = \frac{(1+\sin Ø)}{(1-\sin Ø)}$ FOR PASSIVE EARTH PRESSURE

H' = 3 FEET MINIMUM

$Ps = \gamma \times H'$ = SURCHARGE-MIN. 300 PSF

$P' = Kra \times Ps$

$P_1 = (0.8Kra) \times \gamma \times H$

$P_2 = P' + P_1$

$D = \sqrt{\frac{2R_{SG}}{\gamma (Krp - Kra)}}$

NOTES:

(1) THIS CRITERIA IS FOR BRACED SHEETING ONLY.

(2) FOR FACTOR OF SAFETY FOR TOE PENETRATION SEE SECTION 4.05.6 -"DESIGN CRITERIA".

Greg W. Carson P.E.
ASSISTANT COMMISSIONER, DESIGN
DEPARTMENT OF DESIGN AND CONSTRUCTION

7/9/07
DATE

Marc di Tanna P.E.
DIRECTOR OF ENGINEERING
DEPARTMENT OF ENVIRONMENTAL PROTECTION

8/10/07
DATE

REVISED OCTOBER 2004: L. ADRIEN

SE71

CITY OF NEW YORK
DEPARTMENT OF ENVIRONMENTAL PROTECTION

SE71

STANDARD FOR MINIMUM LOAD DIAGRAM FOR WATERTIGHT SHEETING DESIGN

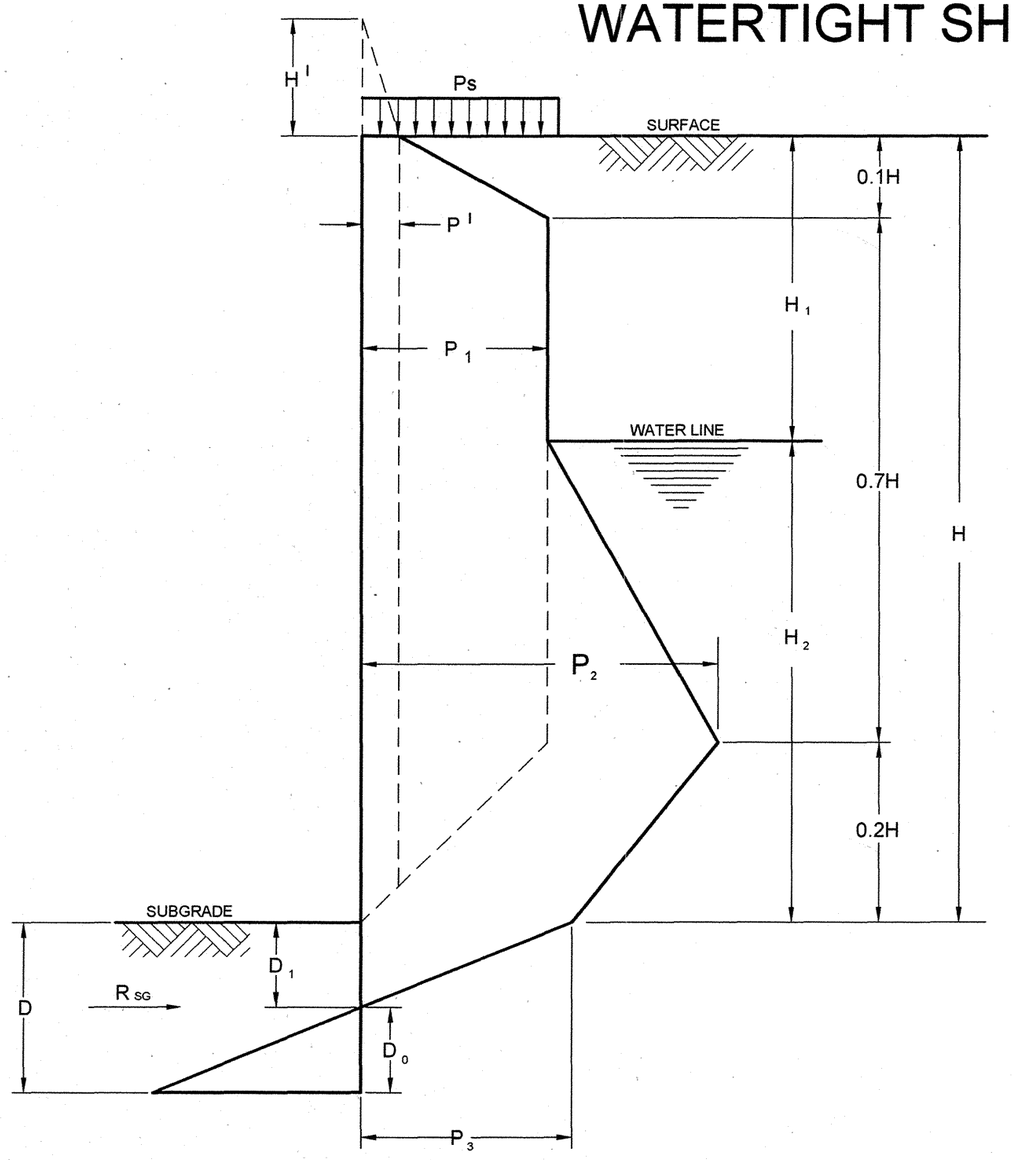

DESIGN CRITERIA:

γ = UNIT WEIGHT OF SOIL

γ_w = UNIT WEIGHT OF WATER

γ_s = UNIT WEIGHT OF SUBMERGED SOIL

$\varnothing$ = ANGLE OF INTERNAL FRICTION OF SOIL

$Kra = \frac{(1-\sin\varnothing)}{(1+\sin\varnothing)}$ FOR ACTIVE EARTH PRESSURE

$Krp = \frac{(1+\sin\varnothing)}{(1-\sin\varnothing)}$ FOR PASSIVE EARTH PRESSURE

H' = 3 FEET MINIMUM

$Ps = \gamma \times H'$ = SURCHARGE-MIN. 300 PSF

$P' = Kra \times Ps$

$P_1 = P' + (0.8Kra) \times (\gamma H_1 + \gamma_s H_2)$

$P_2 = P_1 + \gamma_w (H_2 - 0.2H)$

$P_3 = \gamma_w \times H_2$

$$D_1 = \frac{P_3}{\gamma_s (Krp - Kra)}$$

$$D_0 = \sqrt{\frac{2R_{SG}}{\gamma_s (Krp - Kra)}}$$

$D = D_1 + D_0$

NOTES:

(1) THIS CRITERIA IS FOR BRACED SHEETING ONLY.

(2) FOR FACTOR OF SAFETY FOR TOE PENETRATION SEE SECTION 4.05.6 - "DESIGN CRITERIA".

Gregg W. Conner P.E.
ASSISTANT COMMISSIONER, DESIGN
DEPARTMENT OF DESIGN AND CONSTRUCTION

7/9/07
DATE

Maedi Fane P.E.
DIRECTOR OF ENGINEERING
DEPARTMENT OF ENVIRONMENTAL PROTECTION

8/10/07
DATE

REVISED OCTOBER 2004: L. ADRIEN