Remedial Investigation Report

For

526 Union Avenue, Brooklyn, NY

Block 2741, Lot 3

OER Project Number 16EHAZ063K & VCP Project Number 16VCP048K

E-Designation E-138

Prepared for:

Mr. Adam Westreich

Tryad Group

250 Greenpoint Avenue, Suite #4

Brooklyn, New York 11222

Prepared by:

Creative Environment Solutions, Inc.

39 West 37th Street, 14th Floor

MRattacasa@cescenter.com

212-290-6323

DECEMBER 11, 2015

REMEDIAL INVESTIGATION REPORT

TABLE OF CONTENTS

TABLE OF CONTENTS ..... **II**

LIST OF ACRONYMS ..... **VIII**

CERTIFICATION ..... **X**

REMEDIAL INVESTIGATION REPORT **1**

1.0 INTRODUCTION **1**

1.1 Site Location, Current Usage, and Proposed Redevelopment Plan 2

1.2 Summary of Environmental Findings 3

2.0 SITE HISTORY **7**

2.1 Supplemental Phase II Work Plan 9

3.0 PROJECT MANAGEMENT **14**

3.1 Project Organization 14

3.2 Health and Safety 14

3.3 Materials Management 14

4.0 SUBSURFACE INVESTIGATION **15**

4.1 Investigation Rationale 18

4.2 Investigation Procedures 19

4.2.1 Geotechnical Investigation 19

4.2.2 Soil Sampling 19

4.2.3 Groundwater Sampling 20

4.2.4 Soil Vapor Sampling 21

4.3 Chemical Analysis 22

4.4 Analytical Results 22

4.4.1 Geological and Hydrogeological Conditions 23

4.4.2 Soil Results 23

4.4.3 Groundwater Results 25

4.4.4 Soil Vapor Results 26

5.0 CONCLUSIONS AND RECOMMENDATIONS **27**

5.1 Prior Activity 28
5.2 Impediments to Remedial Action 28
TABLES..... 2
FIGURES..... 3

FIGURES

Figure 1 – General Site Location Map

Figure 2 – Soil Vapor Probe Locations

Figure 3 – Soil Boring and Monitoring Well Locations

Figure 4 – Soil Vapor Analytical Results

Figure 5 – Soil Analytical Results (VOCs & SVOCs)

Figure 6 – Soil Analytical Results (Metals, PCBs, Pesticides)

Figure 7 – Groundwater Analytical Results & Flow Direction

TABLES

Table 1 Soil Analytical Results for VOCs
Table 2 Soil Analytical Results for SVOCs
Table 3 Soil Analytical Results for Metals
Table 4 Soil Analytical Results for Pesticides/PCBs
Table 5 Groundwater Analytical Results for VOCs
Table 6 Groundwater Analytical Results for SVOCs
Table 7 Groundwater Analytical Results for Metals/PCBs
Table 8 Groundwater Analytical Results for Pesticides
Table 9 Soil Vapor Analytical Results for VOCs

APPENDICES

Appendix A Redevelopment Plans
Appendix B Geotechnical Report
Appendix C Soil Boring Logs
Appendix D Laboratory Analytical Data
Appendix E Historic Environmental Reports

LIST OF ACRONYMS

Acronym	Definition
AST	Aboveground Storage Tank
CAMP	Community Air Monitoring Plan
C&D	Construction & Demolition
CEQR	City Environmental Quality Review
CFR	Code of Federal Regulations
CHASP	Construction Health and Safety Plan
CO	Certificate of Occupancy
CPC	City Planning Commission
DSNY	Department of Sanitation
"E"	E-Designation
EAS	Environmental Assessment Statement
EIS	Environmental Impact Statement
ESA	Environmental Site Assessment
EC/IC	Engineering Control and Institutional Control
ELAP	Environmental Laboratory Accreditation Program
FDNY	New York City Fire Department
GPR	Ground Penetrating Radar
HASP	Health and Safety Plan
HAZWOPER	Hazardous Waste Operations Emergency Response
IDW	Investigation Derived Waste
Notice - NNO	Notice of No Objection
Notice - NTP	Notice To Proceed
Notice - NOS	Notice Of Satisfaction
Notice - FNOS	Final Notice of Satisfaction
NYC BSA	New York City Board of Standards and Appeals
NYC DCP	New York City Department of City Planning
NYC DEP	New York City Department of Environmental Protection
NYC DOB	New York City Department of Buildings
NYC DOF	New York City Department of Finance
NYC HPD	New York City Housing Preservation and Development
NYCRR	New York Codes Rules and Regulations
NYC OER	New York City Office of Environmental Remediation
NYS DEC	New York State Department of Environmental Conservation

NYS DEC DER	New York State Department of Environmental Conservation Division of Environmental Remediation
NYS DEC PBS	New York State Department of Environmental Conservation Petroleum Bulk Storage
NYS DOH	New York State Department of Health
NYS DOT	New York State Department of Transportation
OSHA	United States Occupational Health and Safety Administration
PAHs	Polycyclic Aromatic Hydrocarbons
PCBs	Polychlorinated Biphenyls
PE	Professional Engineer
PID	Photo Ionization Detector
PM	Particulate Matter
QEP	Qualified Environmental Professional
RA	Register Architect
RAP	Remedial Action Plan
RCA	Recycled Concrete Aggregate
RCR	Remedial Closure Report
RD	Restrictive Declaration
RI	Remedial Investigation
SCOs	Soil Cleanup Objectives
SCG	Standards, Criteria and Guidance
SMP	Site Management Plan
SPDES	State Pollutant Discharge Elimination System
SSDS	Sub-Slab Depressurization System
SVOCs	Semi-Volatile Organic Compounds
USCS	Unified Soil Classification System
USGS	United States Geological Survey
UST	Underground Storage Tank
TAL	Target Analyte List
TCL	Target Compound List
TCO	Temporary Certificate of Occupancy
VB	Vapor Barrier
VOCs	Volatile Organic Compounds

CERTIFICATION

I, Craig Puerta, P.E., am a Qualified Environmental Professional, as defined in RCNY § 43-1402(ar). I have primary direct responsibility for implementation of the Subsurface Investigation for the 526 Union Avenue Site, (E-Designation: E-138). I am responsible for the content of this Remedial Investigation Report and have reviewed its contents and certify that this report is accurate to the best of my knowledge and contains all available environmental information and data regarding the property.

Craig Puerta, P.E.	12/11/15	
Qualified Environmental Professional	Date	Signature

EXECUTIVE SUMMARY

The Remedial (Phase II) Investigation Report provides sufficient information for establishment of remedial action objectives, evaluation of remedial action alternatives, and selection of a remedy pursuant to RCNY§ 43-1407(f). The subsurface investigation described in this document is consistent with applicable guidance.

INTRODUCTION

This Supplemental Phase II Subsurface Investigation (SSI) Report has been prepared for the redevelopment project located at 526 Union Avenue, Brooklyn, New York (herein referred to as 'Site'). This project has been assigned project number 16EHAZ063K & 16VCP048K by OER. The scope of this investigation, developed in response to the proposed development project and at the request of OER, was based on the Supplemental Phase II Work Plan prepared by Creative Environmental Solutions, Inc. (CES), dated October 2015. An E-Designation for Hazardous Materials (E-138) was placed on the Site by the New York City Department of City Planning (DCP), as part of the October, 2005 Greenpoint-Williamsburg Rezoning Action. The Remedial Investigation, conducted during November, 2015, included the collection of soil, groundwater, and soil vapor beneath the Site.

Site Location and Current Usage

The Site is located in the Williamsburg-Greenpoint neighborhood of Brooklyn and is identified as Block 2741, Lot 3. The site is bound by Union Avenue to the west, Withers Street to the north, Jackson Street to the south, and Meeker Avenue to the east. Currently, the Site is vacant with no site improvements. The neighborhood is characterized by mixed use residential and commercial applications including light industrial application such as metal fabrication and automotive services. Many structures in this neighborhood are abandoned or do not currently have active tenants, although newer residential developments are occurring within a walkable distance of this Site. No schools, day care facilities, or hospitals are located within a 500-foot radius of the Site. Figure three shows the surrounding land usage.

Proposed Redevelopment Plan

The proposed development at the Site will involve the construction of a six (6) story concrete block structure with the roof for mechanical infrastructure. No basement is proposed, however, construction below grade surface will be performed for foundation piles, pile caps, elevator pit, and stairwell. The total depth of construction is anticipated to be no deeper than five feet (5') below existing grade surface for the foundation infrastructure. The lot is approximately 10,000 square feet with 6,500 square feet for new building construction and approximately 3,500 square feet for accessory vehicle parking.

All soils within the footprint of the future building disturbed during the excavation and installation of the foundation infrastructure will be disposed off-site. Two feet (2) of soil will be excavated and disposed off-site for the parking lot and replaced with clean fill material such as recycled concrete aggregate (RCA) meeting NYSDEC Part 375 Restricted Residential criteria. Groundwater was identified at a depth of approximately eight (8) bgs at this Site. A total of twenty-five (25) to thirty (30) new units are proposed for residential application. The proposed development plans are appended to this Supplemental SSI as Appendix A.

Summary of the Work Performed under the Remedial Investigation

CES performed the following scope of work:

1. Installed six (6) soil borings across the entire project Site, and collected 13 soil samples for chemical analysis from the soil borings to evaluate soil quality;

2. Three (3) groundwater samples were collected for chemical analysis in general accordance with low-flow groundwater sampling procedures, to evaluate groundwater quality beneath the site. Groundwater samples were collected from 1-inch diameter permanent monitoring wells advanced with direct push geoprobe technology;

3. Installed four (4) soil vapor probes were installed around Site perimeter for collection of 4 soil vapor samples for chemical analysis. The locations of the soil vapor probes was approximately 15' from adjacent property boundaries.

4. A previous Phase II subsurface investigation was performed by EBC Consultants, Inc. in August 2014 for the purposes of investigating the site with the known "E" designation. EBC performed five soil borings and three groundwater probes and samples.

Summary of Environmental Findings

1. EBC Consultants, Inc. concluded that, with the exception of acetone, which a common laboratory contaminant, no VOCs or SVOCs detected above Unrestricted Use were identified in the samples collected.

2. EBC Consultants, Inc. concluded that the metals arsenic, barium cadmium, chromium, lead, mercury, nickel, silver, and zinc were detected above Unrestricted or Restricted Residential SCOs and that the detections were indicative of typical concentrations of metals observed in NYC soils.

3. EBC Consultants, Inc. concluded that the groundwater results indicated several minor detections of VOCs in all three samples and that none were above NYSDEC TOGS criteria. The detections, according to EBC Consultants, Inc. were indicative of poor quality non potable water common in NYC and is not indicative of any type or groundwater source of contamination.

4. Surface elevation of the property ranges from approximately 10 to 11 feet above sea level, with very slight variations across the Site footprint.

5. Groundwater surface levels were observed at the Site ranging from 7.53 feet below ground surface (bgs) in the eastern monitoring well (MW-SB-6) to 6.86 feet-bgs (MW-SB-1) and 7.03 feet-bgs (MW-SB-2) in the western monitoring wells.

6. Given the relative size of the site, it can be difficult to accurately depict groundwater flow direction given subsurface interferences. CES can reasonably conclude based upon groundwater surface level observations, measurements taken using laser levels and from landmarks that groundwater flow is generally northwesterly beneath the Site towards the East River.

7. The stratigraphy of the site, from the surface down, consists of a compacted surface layer of non-native recycled concrete aggregate (RCA) to approximately 0.25 feet-bgs, consisting fine to medium crushed gravel and stone, brick fragments, metal fragments, asphalt fragments, fine to coarse sand, and silt. Immediately underlying the RCA layer to approximately 5 feet-bgs is urban fill material, as evidenced by varying fractions of brick fragments, metal fragments, and wood fragments mixed with fine to medium sand, fine to medium gravel, and trace fractions of silt. Immediately underlying the historic fill layer to the terminal depth of the Supplemental SSI (15 feet bgs) was a mixture of fine to coarse sand, fine to medium gravel, clay, and silt. A fibrous organic native peat layer or marsh mat was observed from approximately 12 feet to 15 feet bgs in the southeastern-most boring (SB-1).

8. Soil boring sample results for both the August 2014 EBC Investigation and the November 2015 CES Investigation were compared to NYSDEC Unrestricted Use Soil Cleanup Objectives (UUSCOs) and Restricted Residential Use Soil Cleanup Standards (RRSCOs) as presented in 6NYCRR Part 375-6.8. See Figure 5 and 6 for a summary of CES soil analytical and Appendix E for Historic Environmental Reports, including the August 2014 EBC Investigation. A summary of results from both investigations is as follows.

- One VOC, Acetone (a common laboratory contaminant) during the EBC Investigation was detected above its UUSCO (maximum of 190 µg/kg) (EBC).

- One PCB, PCB 1254 was detected in one shallow soil sample SB-3 (0'-5') at 170 µg/kg, above UUSCOs (CES). The laboratory did also identify matrix spike and diluted detections of PCBs in samples SB-1(0'-2'), SB-2(0'-2'), SB-6 (0'-2'). The dilutions performed by the laboratory were up to 20x normal limits for the testing equipment. CES in discussion with the laboratory confirmed the probable presence of low level PCBs in these samples. The exact concentration could not be estimated by the laboratory.

- Several SVOCs including benz(a)anthracene (max of 4,100 µg/kg), benzo(a)pyrene (max of 3,600 µg/kg), benzo(b)fluoranthene (max of 3,900 µg/kg), benzo(k)fluoranthene (max of 2,600 µg/kg), chrysene (max of 4,400 µg/kg), dibenzo(a,h)anthracene (4,500 µg/kg), and indeno(1,2,3-cd)pyrene (max of 1,900 µg/kg) were detected above UUSCOs and RRSCOs in 4 of the 6 shallow samples (CES).

- Two pesticides 4,4'-DDD (43 µg/kg) and 4,4'-DDT (61 µg/kg) were detected above UUSCOs in shallow soil sample SB-6 (0'-2') (CES).

- Several metals including arsenic (EBC) (max of 108 mg/kg), barium (EBC) (max of 2.730 mg/kg), cadmium (EBC) (max of 42.7 mg/kg), chromium (CES) (max of 224 mg/kg), copper (CES) (max of 1160 mg/kg), lead (CES) (max of 5,540 mg/kg), mercury (EBC) (max of 30.9mg/kg), nickel (EBC) (max of 323 mg/kg), silver (EBC) (max of 7.29 mg/kg)and zinc (CES) (max of 5710 mg/kg) were detected above UUSCOs in all soil samples except for SB-4 (5'-7'). Of these, all exceeded RRSCOs with the exception of silver. Metals in SB-6 (2'-4') exceeded UUSCOs but did not exceed RRSCOs. Highest concentrations of metals were consistently detected in shallow sample SB-1 (0'-2') (CES) in the southwestern-most area of the Site adjacent to the sidewalk area.

- Overall, the soil results were consistent with data identified at sites with historic fill material in NYC.

9. CES Groundwater samples results were compared to New York State 6NYCRR Part 703.5 Class GA groundwater quality standards (GQS). See Figure 7 for a summary of groundwater analytical.

   - Groundwater samples did not exhibit concentrations of VOCs, PCBs, or Pesticides above GQS.
   - SVOCs including Benzo (a) anthracene (max of 0.4 µg/L), Benzo (a) pyrene (max of 0.35 µg/L), Benzo (b) fluoranthene (max of 0.32 µg/L), Benzo (k) fluoranthene (max of 0.27 µg/L), Chrysene (max of 0.38 µg/L), and Indeno (1,2,3-cd) pyrene (max of 0.16µg/L) were detected above GQS in groundwater beneath the site.
   - Dissolved metals including Aluminum (max of 0.187 mg/L), Iron (max of 1.28 mg/L), Manganese (max of 2.01 mg/L), and Sodium (max of 32.2 mg/L) were detected above GQS in groundwater beneath the site.
   - The detections are indicative of poor quality non potable water common in NYC and is not indicative of any type or groundwater source of contamination.

10. CES Soil vapor results collected during the Subsurface Investigation were compared to the compounds listed in the Indoor Air Guidance Values and the Vapor Intrusion Matrices 1 and 2 detailed in the New York State Department of Health (NYSDOH) Final Guidance for Evaluating Soil Vapor Intrusion, dated October 2006. 1,1,1-TCA was detected in two of four samples at a maximum concentration of 12.3 $\mu g/m^3$. PCE was detected in all four samples at a maximum concentration of 55.9 $\mu g/m^3$. TCE was detected in one sample at 4.23 $\mu g/m^3$. Total BTEX concentrations ranged from 2.84 $\mu g/m^3$ (CES-1) to 41.77 $\mu g/m^3$ (CES-2).

REMEDIAL INVESTIGATION REPORT

1.0 SITE BACKGROUND

Tryad Group has enrolled in the New York City Voluntary Cleanup Program (NYC VCP) to investigate and remediate a 10,000-square foot site located at 526 Union Avenue in the Williamsburg-Greenpoint section of Brooklyn, New York. Residential use is proposed for the property. The RI work was performed between August 2014 and November 2015. This RIR summarizes the nature and extent of contamination and provides sufficient information for establishment of remedial action objectives, evaluation of remedial action alternatives, and selection of a remedy that is protective of human health and the environment consistent with the use of the property pursuant to RCNY§ 43-1407(f).

1.1 SITE LOCATION AND CURRENT USAGE

The Site is located at 526 Union Avenue in the Williamsburg-Greenpoint section of Brooklyn, New York. and is identified as Block number 2471 and Lot number 3 on the New York City Tax Map. Figure 1 shows the Site location. The Site is 10,000 -square feet and is bounded by Withers Street to the north, Jackson Street to the south, Meeker Avenue to the east, and Union Avenue to the west. A map of the site boundary is shown in Figure 1. Currently, the Site is vacant with no tenants and/or structures at the site..

1.2 PROPOSED REDEVELOPMENT PLAN

The proposed development at the Site will involve the construction of a six (6) story concrete block structure with the roof for mechanical infrastructure. No basement is proposed; however, construction below grade surface will be performed for foundation piles, pile caps, elevator pit and stairwell. The total depth of construction is anticipated to be no deeper than five feet (5') below existing grade surface. The lot is approximately 10,000 square feet with 6,500 square feet for new building construction and approximately 3,500 square feet for accessory vehicle parking. Groundwater was identified at a depth of eight (8) to ten (10) feet bgs at this Site. A total of twenty-five (25) to thirty (30) new units are proposed for residential application. Layout of the proposed site development is presented in Figure Two. The current zoning

designation is M1-2/R6A. The remedial action contemplated under this RAWP may be implemented independently of the proposed redevelopment plan.

1.3 DESCRIPTION OF SURROUNDING PROPERTY

The Site is located in the Williamsburg-Greenpoint neighborhood of Brooklyn, New York. The neighborhood is characterized by mixed use residential and commercial applications including light industrial application such as metal fabrication and automotive services. Many structures in this neighborhood are abandoned or do not currently have active tenants, although newer residential developments are occurring within a walkable distance of this Site. No schools, day care facilities, or hospitals are located within a 500-foot radius of the Site. Figure one shows the surrounding land usage.

2.0 SITE HISTORY

Historically, the Site was undeveloped as of the earliest known Sanborn record map in 1887. Circa 1905 the Site was used as a barrel storage yard. From 1916-2007 the Site was used as a junk yard. The junk yard ceased operations at an unknown date after 2007. The owner informed CES that the Site was used as a parking lot since 2007 but this operation has since ceased. No items of specific environmental concern; for example, underground storage tanks, hazardous materials storage/usage were identified from the historical review.

A previous Phase II subsurface investigation was performed by EBC Consultants, Inc. in August 2014 for the purposes of investigating the site with the known "E" designation. EBC performed five soil borings and three groundwater probes and samples. Soil samples were compared to Unrestricted Use and Restricted Residential Use Soil Cleanup Objectives (SCOs) in NYSDEC CP-51.

With the exception of acetone, which a common laboratory contaminant, no VOCs or SVOCs detected above Unrestricted Use were identified in the samples collected.

The metals arsenic, barium cadmium, chromium, lead, mercury, nickel, silver, and zinc were detected above Unrestricted or Restricted Residential SCOs. The detections were indicative of typical concentrations of metals observed in NYC soils.

The groundwater results indicated several minor detections of VOCs in all three samples. None of the detections were above NYSDEC TOGS criteria. The detections are indicative of poor quality non potable water common in NYC and is not indicative of any type or groundwater source of contamination.

2.1 Supplemental Phase II Work Plan

In October 2015, CES prepared a Supplemental Phase II Work Plan, which had been approved by the New York City Office of Environmental Remediation (OER). The work plan proposed six (6) soil borings, three (3) groundwater samples, and four (4) soil vapor samples. The work plan also included sampling protocol and a health and safety plan for the Site.

2.0 SITE HISTORY

2.1 PAST USES AND OWNERSHIP

Historically, the Site was undeveloped as of the earliest known Sanborn record map in 1887. Circa 1905 the Site was used as a barrel storage yard. From 1916-2007 the Site was used as a junk yard. The junk yard ceased operations at an unknown date after 2007. The owner informed CES that the Site was used as a parking lot since 2007 but this operation has since ceased. No items of specific environmental concern; for example, underground storage tanks, hazardous materials storage/usage were identified from the historical review. Describe past ownership and usage of the property based on the results of Phase 1 investigation including available sources, such as government databases, Fire Department records, electronic Buildings Department records, historical land use maps, inspection title reports, fire insurance maps, visual inspections and other sources.

2.2 PREVIOUS INVESTIGATIONS

A previous Phase II subsurface investigation was performed by EBC Consultants, Inc. in August 2014 for the purposes of investigating the site with the known "E" designation. EBC performed five soil borings and three groundwater probes and samples. Soil samples were compared by EBC Consultants, Inc. to Unrestricted Use and Restricted Residential Use Soil Cleanup Objectives (SCOs) in NYSDEC CP-51.

EBC Consultants, Inc. concluded that, with the exception of acetone, which a common laboratory contaminant, no VOCs or SVOCs detected above Unrestricted Use were identified in the samples collected.

EBC Consultants, Inc. concluded that the metals arsenic, barium cadmium, chromium, lead, mercury, nickel, silver, and zinc were detected above Unrestricted or Restricted Residential SCOs and that the detections were indicative of typical concentrations of metals observed in NYC soils.

EBC Consultants, Inc. concluded that the groundwater results indicated several minor detections of VOCs in all three samples and that none were above NYSDEC TOGS criteria. The

detections, according to EBC Consultants, Inc. were indicative of poor quality non potable water common in NYC and is not indicative of any type or groundwater source of contamination.

In October 2015, CES prepared a Supplemental Phase II Work Plan, which had been approved by the New York City Office of Environmental Remediation (OER). The work plan proposed six (6) soil borings, three (3) groundwater samples, and four (4) soil vapor samples. The work plan also included sampling protocol and a health and safety plan for the Site.

2.3 SITE INSPECTION

In November 2015, CES conducted a New York City Office of Environmental Remediation (OER)-approved Supplemental Phase II Investigation. In accordance with the Remedial Investigation, CES completed the following scope of work:

1. Installation of six (6) soil borings across the entire project Site, and collection of 13 soil samples for chemical analysis from the soil borings to evaluate soil quality;

2. Three (3) groundwater samples were collected for chemical analysis in general accordance with low-flow groundwater sampling procedures, to evaluate groundwater quality beneath the site. Groundwater samples were collected from 1-inch diameter permanent monitoring wells advanced with direct push geoprobe technology;

3. Installation of four (4) soil vapor probes were installed around Site perimeter for collection of 4 soil vapor samples for chemical analysis. The locations of the soil vapor probes were approximately 15' from adjacent property boundaries.

The following conditions were noted during the November 2015 Site Inspection.

1 Surface elevation of the property ranges from approximately 10 to 11 feet above sea level, with very slight variations across the Site footprint.

2 Groundwater surface levels were observed at the Site ranging from 7.53 feet below ground surface (bgs) in the eastern monitoring well (MW-SB-6) to 6.86 feet-bgs (MW-SB-1) and 7.03 feet-bgs (MW-SB-2) in the western monitoring wells.

3 Given the relative size of the site, it can be difficult to accurately depict groundwater flow direction given subsurface interferences. CES can reasonably conclude based

upon groundwater surface level observations, measurements taken using laser levels and from landmarks that groundwater flow is generally northwesterly beneath the Site towards the East River.

4 The stratigraphy of the site, from the surface down, consists of a compacted surface layer of non-native recycled concrete aggregate (RCA) to approximately 0.25 feet-bgs, consisting fine to medium crushed gravel and stone, brick fragments, metal fragments, asphalt fragments, fine to coarse sand, and silt. Immediately underlying the RCA layer to approximately 5 feet-bgs is urban fill material, as evidenced by varying fractions of brick fragments, metal fragments, and wood fragments mixed with fine to medium sand, fine to medium gravel, and trace fractions of silt. Immediately underlying the historic fill layer to the terminal depth of the Supplemental SSI (15 feet bgs) was a mixture of fine to coarse sand, fine to medium gravel, clay, and silt. A fibrous organic native peat layer or marsh mat was observed from approximately 12 feet to 15 feet bgs in the southeastern-most boring (SB-1).

2.4 AREAS OF CONCERN

The results of the Remedial Investigation suggested the following:

- The soils immediately underlying the site primarily consist of non-native urban fill material to a depth of at least 5-feet below grade.

- The soils in localized areas of the Site contain slightly elevated concentrations of SVOCs, metals, PCBs, and/or pesticides. These concentrations appear to be a result of non-native fill material at the site, rather than a specific source of contamination. In addition, VOCs were not detected in the soils beneath the site at concentrations exceeding the NYSDEC UUSCOs.

- Groundwater beneath the Site contains slightly elevated concentrations of SVOCs, and metals. In addition, metals typically adhere to sediments in turbid groundwater samples. Therefore, metals concentrations are significantly reduced in the filtered groundwater samples collected. The slightly elevated concentrations of iron, manganese, and sodium are likely the result of regional groundwater quality and do not indicate a source of contamination at the site.

- Soil vapor results concluded that analytical detections were below concentrations that would trigger any further action in accordance with State NYS DOH soil vapor guidance matrices 1 and 2 or indoor air guidance standards.

3.0 PROJECT MANAGEMENT

3.1 Project Organization

The Qualified Environmental Profession (QEP) responsible for preparation of this report is Craig Puerta, P.E.

3.2 Health and Safety

All work described in this report was performed according to the Health and Safety Plan, contained in the Supplemental Phase II Work Plan, which has been submitted under a separate cover. In addition, all work was performed in full compliance with applicable laws and regulations, including Site and OSHA worker safety requirements and HAZWOPER requirements.

3.3 Materials Management

All material encountered during the report was managed in accordance with applicable laws and regulations. Following sample collection, boreholes were backfilled with soil cuttings. Development water from the monitoring wells was discharged to the ground, in an unpaved area, in the vicinity of the groundwater well.

4.0 SUBSURFACE INVESTIGATION

A previous Phase II subsurface investigation was performed by EBC Consultants, Inc. in August 2014 for the purposes of investigating the site with the known "E" designation. EBC performed five soil borings and three groundwater probes and samples. CES conducted a Remedial Investigation in November 2015. CES performed the following scope of work:

1 Installed six (6) soil borings across the entire project Site, and collected 13 soil samples for chemical analysis from the soil borings to evaluate soil quality;

2 Three (3) groundwater samples were collected for chemical analysis in general accordance with low-flow groundwater sampling procedures, to evaluate groundwater quality beneath the site. Groundwater samples were collected from 1-inch diameter permanent monitoring wells advanced with direct push geoprobe technology;

3 Installed four (4) soil vapor probes were installed around Site perimeter for collection of 4 soil vapor samples for chemical analysis. The locations of the soil vapor probes was approximately 15' from adjacent property boundaries.

Soil samples were compared to Unrestricted Use and Restricted Residential Use Soil Cleanup Objectives (SCOs) in NYSDEC CP-51.

1. EBC Consultants, Inc. concluded that, with the exception of acetone, which a common laboratory contaminant, no VOCs or SVOCs detected above Unrestricted Use were identified in the samples collected.

2. EBC Consultants, Inc. concluded that the metals arsenic, barium cadmium, chromium, lead, mercury, nickel, silver, and zinc were detected above Unrestricted or Restricted Residential SCOs and that the detections were indicative of typical concentrations of metals observed in NYC soils.

3. EBC Consultants, Inc. concluded that the groundwater results indicated several minor detections of VOCs in all three samples and that none were above NYSDEC TOGS criteria. The detections, according to EBC Consultants, Inc. were indicative

of poor quality non potable water common in NYC and is not indicative of any type or groundwater source of contamination.

4. Surface elevation of the property ranges from approximately 10 to 11 feet above sea level, with very slight variations across the Site footprint.

5. Groundwater surface levels were observed at the Site ranging from 7.53 feet below ground surface (bgs) in the eastern monitoring well (MW-SB-6) to 6.86 feet-bgs (MW-SB-1) and 7.03 feet-bgs (MW-SB-2) in the western monitoring wells.

6. Given the relative size of the site, it can be difficult to accurately depict groundwater flow direction given subsurface interferences. CES can reasonably conclude based upon groundwater surface level observations, measurements taken using laser levels and from landmarks that groundwater flow is generally northwesterly beneath the Site towards the East River.

7. The stratigraphy of the site, from the surface down, consists of a compacted surface layer of non-native recycled concrete aggregate (RCA) to approximately 0.25 feet-bgs, consisting fine to medium crushed gravel and stone, brick fragments, metal fragments, asphalt fragments, fine to coarse sand, and silt. Immediately underlying the RCA layer to approximately 5 feet-bgs is urban fill material, as evidenced by varying fractions of brick fragments, metal fragments, and wood fragments mixed with fine to medium sand, fine to medium gravel, and trace fractions of silt. Immediately underlying the historic fill layer to the terminal depth of the Supplemental SSI (15 feet bgs) was a mixture of fine to coarse sand, fine to medium gravel, clay, and silt. A fibrous organic native peat layer or marsh mat was observed from approximately 12 feet to 15 feet bgs in the southeastern-most boring (SB-1).

8. Soil boring sample results for both the August 2014 EBC Investigation and the November 2015 CES Investigation were compared to NYSDEC Unrestricted Use Soil Cleanup Objectives (UUSCOs) and Restricted Residential Use Soil Cleanup Standards (RRSCOs) as presented in 6NYCRR Part 375-6.8. See Figure 5 and 6 for a summary of CES soil analytical and Appendix E for Historic Environmental

Reports, including the August 2014 EBC Investigation. A summary of results from both investigations is as follows.

- One VOC, Acetone (a common laboratory contaminant) during the EBC Investigation was detected above its UUSCO (maximum of 190 µg/kg) (EBC).
- One PCB, PCB 1254 was detected in one shallow soil sample SB-3 (0'-5') at 170 µg/kg, above UUSCOs (CES). The laboratory did also identify matrix spike and diluted detections of PCBs in samples SB-1(0'-2'), SB-2(0'-2'), SB-6 (0'-2'). The dilutions performed by the laboratory were up to 20x normal limits for the testing equipment. CES in discussion with the laboratory confirmed the probable presence of low level PCBs in these samples. The exact concentration could not be estimated by the laboratory.
- Several SVOCs including benz(a)anthracene (max of 4,100 µg/kg), benzo(a)pyrene (max of 3,600 µg/kg), benzo(b)fluoranthene (max of 3,900 µg/kg), benzo(k)fluoranthene (max of 2,600 µg/kg), chrysene (max of 4,400 µg/kg), dibenzo(a,h)anthracene (4,500 µg/kg), and indeno(1,2,3-cd)pyrene (max of 1,900 µg/kg) were detected above UUSCOs and RRSCOs in 4 of the 6 shallow samples (CES).
- Two pesticides 4,4'-DDD (43 µg/kg) and 4,4'-DDT (61 µg/kg) were detected above UUSCOs in shallow soil sample SB-6 (0'-2') (CES).
- Several metals including arsenic (EBC) (max of 108 mg/kg), barium (EBC) (max of 2.730 mg/kg), cadmium (EBC) (max of 42.7 mg/kg), chromium (CES) (max of 224 mg/kg), copper (CES) (max of 1160 mg/kg), lead (CES) (max of 5,540 mg/kg), mercury (EBC) (max of 30.9mg/kg), nickel (EBC) (max of 323 mg/kg), silver (EBC) (max of 7.29 mg/kg) and zinc (CES) (max of 5710 mg/kg) were detected above UUSCOs in all soil samples except for SB-4 (5'-7'). Of these, all exceeded RRSCOs with the exception of silver. Metals in SB-6 (2'-4') exceeded UUSCOs but did not exceed RRSCOs. Highest concentrations of metals were consistently detected in shallow sample SB-1 (0'-2') (CES) in the southwestern-most area of the Site adjacent to the sidewalk area.

- Overall, the soil results were consistent with data identified at sites with historic fill material in NYC.

9. CES Groundwater samples results were compared to New York State 6NYCRR Part 703.5 Class GA groundwater quality standards (GQS). See Figure 7 for a summary of groundwater analytical.

   - Groundwater samples did not exhibit concentrations of VOCs, PCBs, or Pesticides above GQS.
   - SVOCs including Benzo (a) anthracene (max of 0.4 µg/L), Benzo (a) pyrene (max of 0.35 µg/L), Benzo (b) fluoranthene (max of 0.32 µg/L), Benzo (k) fluoranthene (max of 0.27 µg/L), Chrysene (max of 0.38 µg/L), and Indeno (1,2,3-cd) pyrene (max of 0.16µg/L) were detected above GQS in groundwater beneath the site.
   - Dissolved metals including Aluminum (max of 0.187 mg/L), Iron (max of 1.28 mg/L), Manganese (max of 2.01 mg/L), and Sodium (max of 32.2 mg/L) were detected above GQS in groundwater beneath the site.
   - The detections are indicative of poor quality non potable water common in NYC and is not indicative of any type or groundwater source of contamination.

10. CES Soil vapor results collected during the Subsurface Investigation were compared to the compounds listed in the Indoor Air Guidance Values and the Vapor Intrusion Matrices 1 and 2 detailed in the New York State Department of Health (NYSDOH) Final Guidance for Evaluating Soil Vapor Intrusion, dated October 2006. 1,1,1-TCA was detected in two of four samples at a maximum concentration of 12.3 $\mu g/m^3$. PCE was detected in all four samples at a maximum concentration of 55.9 $\mu g/m^3$. TCE was detected in one sample at 4.23 $\mu g/m^3$. Total BTEX concentrations ranged from 2.84 $\mu g/m^3$ (CES-1) to 41.77 $\mu g/m^3$ (CES-2).

4.1 Investigation Rationale

In order to address the recommendations of NYCOER, a Supplemental Subsurface

Investigation has been performed by CES. The Subsurface Investigation was performed in general accordance with the Supplemental Phase II Work Plan, dated October 2015. The Supplemental Phase II Investigation included the completion of a soil, groundwater, and soil vapor sampling. Sample locations are shown on **Figure 2 & 3**.

4.2 Investigation Procedures

Prior to invasive work, a one-call utility mark-out was completed in accordance with local laws to locate buried electric, natural gas, telecommunication utilities, etc.

In order to determine soil, groundwater, and soil vapor quality beneath the Site, CES performed six (6) soil borings. Thirteen (13) soil samples and three (3) groundwater samples were submitted for analysis. Groundwater samples were collected in accordance with low-flow groundwater sampling procedures, to evaluate groundwater quality beneath the site. Groundwater samples were collected from 1-inch diameter permanent monitoring wells advanced with direct push geoprobe technology. In addition, 4 soil vapor probes were advanced around Site perimeter (15' from adjacent property line) for collection of 4 samples for chemical analysis. Samples were collected in accordance with the Supplemental Phase II Work Plan prepared by CES. (October 2015).

4.2.1 Geotechnical Investigation

CES conducted a geotechnical investigation across the entire site prior to investigative borings as detailed in the September 28, 2015 Geotechnical Investigation Report.. All accessible areas of the property have been surveyed. In addition, the Site was surveyed for the existence of historic underground storage tanks (USTs) associated with the site, as well as the configurations of existing underground utilities in advance of the subsurface investigation.

The geotechnical investigation did not identify any USTs within the Site or any subsurface utilities that interfered with the Supplemental Phase II Investigation. The Geotechnical Investigation Report is included as **Appendix B**.

4.2.2 Soil Sampling

CES advanced six (6) investigative borings. A geologist/geotechnical engineer/QEP supervised the advancement of all soil borings and monitoring wells, and collection of all soil,

groundwater, and soil vapor samples. The geologist/geotechnical engineer screened the soil samples for environmental impacts and collected environmental samples for laboratory analysis. Site work was performed according to the safety guidelines outlined in the Health and Safety Plan (HASP), contained in the Supplemental Phase II Investigation Work Plan (October 2015), which has been submitted under a separate cover.

Soil was collected continuously from ground surface to the boring termination depth (15' bgs) with a Geoprobe macrocore sampler in five-foot increments using disposable acetate sleeves. Each sample was screened for organic vapors with a photo-ionization detector (PID) calibrated to 100 parts per million (ppm) isobutylene) and evaluated for visual and olfactory indications of environmental impacts. Soil descriptions were recorded in a field log and soil-boring logs are contained in **Appendix C**.

Five soil borings were advanced beneath the proposed building footprint and one boring was advanced on the eastern portion of the property, within the proposed parking lot. The site plan showing the boring locations is attached as **Figure 3**.

A minimum of two soil samples were collected from each boring for analysis with the exception of the future parking lot boring for which three samples were collected. A surface soil sample (from the 0-2 feet bgs interval) and subsurface soil sample (from the two (2) foot interval beneath the proposed maximum excavation depth were collected, which for this Site is estimated to be 5'. Accordingly, samples were collected from 5'-7' interval. One sample location was targeted from the depth of the proposed elevator pit at approximately 7'-8' bgs. The boring location at the future parking lot was sampled at 0'-2', 2'-4', and from the soil/groundwater interface (approximately 7'). The shallow soil samples are intended to represent the quality of soils that will be disturbed as part of redevelopment activities.

4.2.3 Groundwater Sampling

Three permanent groundwater-monitoring wells were installed by advancing a 1-inch diameter PVC well screen and riser into three boreholes, Inc. (See **Figure 3** for well locations). Ten feet of screen was installed to a depth of fifteen feet bgs, screened across the groundwater table. All non-dedicated drilling tools and sampling equipment was decontaminated between boring locations using potable tap water and a phosphate-free detergent (e.g., Alconox).

Initially, water level measurements were collected from each well. Prior to sampling, wells were developed until groundwater was visibly clear from fine sediment.

A total of three groundwater samples were collected and submitted for chemical analysis. Groundwater samples were collected, using low-flow techniques, with a peristaltic pump measured at a pumping rate of less than 0.5 liters per minute (LPM) and dedicated-disposable Teflon-lined tubing. Samples collected from the monitoring wells were contained in pre-cleaned laboratory supplied glassware and submitted to a NYSDOH approved analytical laboratory for analysis for VOCs, SVOCs, metals (filtered and unfiltered), pesticides, and PCBs. Immediately following the collection of samples, they were placed in a cooler with ice (~4°C). A chain-of-custody (COC) was filled out, signed, and delivered to the NYSDOH approved analytical laboratory, along with the samples collected.

Groundwater was encountered from 6.86-feet bgs to 7.53-feet bgs across the Site. Sampling was conducted in accordance with NYSDEC Draft DER-10 Technical Guidance for Site Investigation and Remediation (May 2010), Sampling Guidelines and Protocols (March 1991), and the Supplemental Phase II Investigation Work Plan (October 2015).

4.2.4 Soil Vapor Sampling

A total of four soil gas samples were collected from the proposed soil vapor locations on the Sampling Location Map (**Figure 4**). All samples were collected in accordance with the Final Guidance for Evaluating Soil Vapor Intrusion in the State of New York (NYSDOH October 2006). The vapor implants were set at a depth of approximately five feet beneath existing grade surface (~5-feet bgs) using a hammer drill. All locations of the probes were offset 15' from the adjacent property line for location reference. A stainless steel screen attached to polyethylene tubing was inserted through the drill hole. The drill hole was backfilled with glass beads to a minimum of six inches above the screen. A bentonite seal was placed above the glass beads to the ground surface.

Prior to sampling approximately two to three probe volumes was purged at a flow rate less than 0.2 liters per minute. VOC concentrations were recorded during purging utilizing a PID. However, the PID detected no VOC concentrations above background in each of the soil vapor probes. Samples were collected in Summa canisters, which were certified clean by the

laboratory and analyzed by using USEPA Method TO-15. Flow rate of both purging and sampling did not exceed 0.2 L/min. Sampling occurred for the duration of approximately two hours. A sample log sheet was maintained summarizing sample identification, date and time of sample collection, sampling depth, identity of samplers, sampling methods and devices, soil vapor purge volumes, volume of the soil vapor extracted, vacuum of canisters before and after the samples are collected, apparent moisture content of the sampling zone, and chain of custody protocols.

As part of the vapor intrusion evaluation, a tracer gas was used in accordance with NYSDOH protocols to serve as a quality assurance/quality control (QA/QC) device to verify the integrity of the soil vapor probe seal. Helium was used as the tracer gas and a box served to keep it in contact with the probe during testing. An Ion Science GasCheck Helium Detector was used to analyze a sample of soil vapor for the tracer prior to sampling. No concentrations of helium were detected in the samples collected.

4.3 Chemical Analysis

Soil and groundwater samples were submitted to a New York State Department of Health (NYSDOH) Environmental Laboratory Accreditation Program (ELAP)-certified laboratory (Phoenix Environmental Laboratories of Manchester, CT). Soil vapor samples were submitted to Alpha Analytical (Mansfield, MA) for analysis. Soil and groundwater samples were analyzed for the presence of VOCs by EPA Method 8260, SVOCs by EPA Method 8270, TAL Metals by EPA Method 6010, and Pesticides/PCBs by EPA Method 8081/8082. Groundwater samples were analyzed for both TAL metals and filtered metals in addition to the compounds evaluated for soils. Soil vapor samples were analyzed for the presence of VOCs by Method TO-15. These methods are capable of detecting compounds associated with fuel oil as well as solvents, gasoline, and other metals related contaminants.

4.4 Analytical Results

Analytical data from the soil samples collected from the soil borings were compared to the Unrestricted Use Soil Cleanup Objectives (Track 1) as presented in 6NYCRR Part 375-6.8. Groundwater samples were compared to the NYSDEC Class GA Groundwater Standards. Soil vapor samples were compared to the compounds listed in Vapor Intrusion Matrices in the New

York State Department of Health (NYSDOH) Final Guidance for Evaluating Soil Vapor Intrusion, dated October 2006. Analytical data are summarized on **Tables 1 through 9** and a copy of the laboratory analytical report is included in **Appendix D**.

4.4.1 Geological and Hydrogeological Conditions

Stratigraphy

The site consists of non-native urban fill material to a depth of at least 5 feet below grade, underlain by a mixture of fine to coarse sand, fine to medium gravel, clay, and silt. A fibrous organic native peat layer or marsh mat was observed from approximately 12 feet to 15 feet bgs in the southeastern-most boring (SB-1). Soil boring logs are contained in **Appendix C**.

Hydrogeology

Groundwater surface levels were observed at the Site ranging from 7.53 feet below ground surface (bgs) in the northernmost monitoring well (MW-SB-6) to 6.86 feet-bgs (MW-SB-1) and 7.03 feet-bgs (MW-SB-2) in the southernmost monitoring wells. CES can reasonably conclude based upon groundwater surface level observations, measurements taken using laser levels and from landmarks that groundwater flow is generally northwesterly beneath the Site towards the East River.

4.4.2 Soil Results

Soil boring sample results for both the August 2014 EBC Investigation and the November 2015 CES Investigation were compared to NYSDEC Unrestricted Use Soil Cleanup Objectives (UUSCOs) and Restricted Residential Use Soil Cleanup Standards (RRSCOs) as presented in 6NYCRR Part 375-6.8. See Figure 5 and 6 for a summary of CES soil analytical and Appendix E for Historic Environmental Reports, including the August 2014 EBC Investigation. A summary of results from both investigations is as follows.

- One VOC, Acetone (a common laboratory contaminant) during the EBC Investigation was detected above its UUSCO (maximum of 190 µg/kg) (EBC).
- One PCB, PCB 1254 was detected in one shallow soil sample SB-3 (0'-5') at 170 µg/kg, above UUSCOs (CES). The laboratory did also identify matrix spike and

diluted detections of PCBs in samples SB-1(0'-2'), SB-2(0'-2'), SB-6 (0'-2'). The dilutions performed by the laboratory were up to 20x normal limits for the testing equipment. CES in discussion with the laboratory confirmed the probable presence of low level PCBs in these samples. The exact concentration could not be estimated by the laboratory.

- Several SVOCs including benz(a)anthracene (max of 4,100 µg/kg), benzo(a)pyrene (max of 3,600 µg/kg), benzo(b)fluoranthene (max of 3,900 µg/kg), benzo(k)fluoranthene (max of 2,600 µg/kg), chrysene (max of 4,400 µg/kg), dibenzo(a,h)anthracene (4,500 µg/kg), and indeno(1,2,3-cd)pyrene (max of 1,900 µg/kg) were detected above UUSCOs and RRSCOs in 4 of the 6 shallow samples (CES).
- Two pesticides 4,4'-DDD (43 µg/kg) and 4,4'-DDT (61 µg/kg) were detected above UUSCOs in shallow soil sample SB-6 (0'-2') (CES).
- Several metals including arsenic (EBC) (max of 108 mg/kg), barium (EBC) (max of 2.730 mg/kg), cadmium (EBC) (max of 42.7 mg/kg), chromium (CES) (max of 224 mg/kg), copper (CES) (max of 1160 mg/kg), lead (CES) (max of 5,540 mg/kg), mercury (EBC) (max of 30.9mg/kg), nickel (EBC) (max of 323 mg/kg), silver (EBC) (max of 7.29 mg/kg) and zinc (CES) (max of 5710 mg/kg) were detected above UUSCOs in all soil samples except for SB-4 (5'-7'). Of these, all exceeded RRSCOs with the exception of silver. Metals in SB-6 (2'-4') exceeded UUSCOs but did not exceed RRSCOs. Highest concentrations of metals were consistently detected in shallow sample SB-1 (0'-2') (CES) in the southwestern-most area of the Site adjacent to the sidewalk area.

Overall, the soil results were consistent with data identified at sites with historic fill material in NYC. Data collected during the August 2014 EBC Investigation and the CES Supplemental Phase II Investigation is sufficient to delineate the vertical and horizontal distribution of

contaminants in soil/fill at the Site. Summary tables of data for chemical analyses performed on soil samples are included in **Tables 1-4**.

4.4.3 Groundwater Results

Groundwater samples results were compared to New York State 6NYCRR Part 703.5 Class GA groundwater quality standards (GQS). See Figure 7 for a summary of groundwater analytical.

- Groundwater samples did not exhibit concentrations of VOCs, PCBs, or Pesticides above GQS.
- SVOCs including Benzo (a) anthracene (max of 0.4 µg/L), Benzo (a) pyrene (max of 0.35 µg/L), Benzo (b) fluoranthene (max of 0.32 µg/L), Benzo (k) fluoranthene (max of 0.27 µg/L), Chrysene (max of 0.38 µg/L), and Indeno (1,2,3-cd) pyrene (max of 0.16µg/L) were detected above GQS in groundwater beneath the site.
- Dissolved metals including Aluminum (max of 0.187 mg/L), Iron (max of 1.28 mg/L), Manganese (max of 2.01 mg/L), and Sodium (max of 32.2 mg/L) were detected above GQS in groundwater beneath the site.
- The detections are indicative of poor quality non potable water common in NYC and is not indicative of any type or groundwater source of contamination.

Several (unfiltered) metals listed above were detected at concentrations exceeding the groundwater standards, however, most of the metals detected are naturally occurring in shallow groundwater and are also likely a result of suspended material in the unfiltered samples.

Groundwater analytical results indicate that SVOCs and metals were detected at concentrations exceeding the NYSDEC Class GA GQS beneath the Site. However, these low concentrations appear to be the result of regional groundwater quality and do not indicate a source of contamination at the site. This is further supported by the soil quality data.

Data collected during the Supplemental Phase 2 Investigation is sufficient to delineate the distribution of contaminants in groundwater at the Site. A summary table of data for chemical

analyses performed on groundwater samples and applicable GQS is included in **Tables 5 through 8**.

4.4.4 Soil Vapor Results

Soil vapor results collected during the Subsurface Investigation were compared to the compounds listed in the Indoor Air Guidance Values and the Vapor Intrusion Matrices 1 and 2 detailed in the New York State Department of Health (NYSDOH) Final Guidance for Evaluating Soil Vapor Intrusion, dated October 2006. 1,1,1-TCA was detected in two of four samples at a maximum concentration of 12.3 $\mu g/m^3$. PCE was detected in all four samples at a maximum concentration of 55.9 $\mu g/m^3$. TCE was detected in one sample at 4.23 $\mu g/m^3$. Total BTEX concentrations ranged from 2.84 $\mu g/m^3$ (CES-1) to 41.77 $\mu g/m^3$ (CES-2)..

- None of the compounds exceeded the Indoor Air Guidance Values.
- None of the compounds applicable to Soil Vapor Matrix 1 exceeded the 50 µg/m3 threshold that would require any further action.
- None of the compounds applicable to Soil Vapor Matrix 2 exceeded the 100 µg/m3 threshold that would require any further action.

Soil vapor results concluded that analytical detections were below concentrations that would trigger any further action in accordance with State NYS DOH soil vapor guidance matrices 1 and 2.

Data collected during the Subsurface Investigation is sufficient to delineate the distribution of contaminants in soil vapor at the Site. A summary table of data for chemical analyses performed on soil vapor samples is included in **Table 9**.

5.0 CONCLUSIONS AND RECOMMENDATIONS

As detailed above, the Subsurface Investigation included the advancement of six soil borings at the site. The stratigraphy of the site, from the surface down, consists of a compacted surface layer of non-native recycled concrete aggregate (RCA) to approximately 0.25 feet-bgs, consisting fine to medium crushed gravel and stone, brick fragments, metal fragments, asphalt fragments, fine to coarse sand, and silt. Immediately underlying the RCA layer to approximately 5 feet-bgs is urban fill material, as evidenced by varying fractions of brick fragments, metal fragments, and wood fragments mixed with fine to medium sand, fine to medium gravel, and trace fractions of silt. Immediately underlying the historic fill layer to the terminal depth of the Supplemental SSI (15 feet bgs) was a mixture of fine to coarse sand, fine to medium gravel, clay, and silt. A fibrous organic native peat layer or marsh mat was observed from approximately 12 feet to 15 feet bgs in the southeastern-most boring (SB-1).

A total of thirteen soil samples, three groundwater samples, and four soil vapor samples were collected and submitted for laboratory analysis.

The results of the Subsurface Investigation suggest the following:

- The soils immediately underlying the site primarily consist of non-native urban fill material to a depth of at least 5-feet below grade.
- The soils in localized areas of the Site contain elevated concentrations of SVOCs, metals, PCBs, and/or pesticides. These concentrations appear to be a result of non-native fill material at the site, rather than a specific source of contamination. In addition, VOCs were not detected in the soils beneath the site at concentrations exceeding the NYSDEC UUSCOs.
- Groundwater beneath the Site contains slightly elevated concentrations of SVOCs, and metals. In addition, metals typically adhere to sediments in turbid groundwater samples. Therefore, metals concentrations are significantly reduced in the filtered groundwater samples collected. The slightly elevated concentrations of iron, manganese, and sodium are likely the result of regional groundwater quality and do not indicate a source of contamination at the site.

- Soil vapor results concluded that analytical detections were below concentrations that would trigger any further action in accordance with State NYS DOH soil vapor guidance matrices 1 and 2 or indoor air guidance standards.

As described in Section 1.1, redevelopment plans for the site include the construction of a six (6) story concrete block structure with the roof for mechanical infrastructure. No basement is proposed, however, construction below grade surface will be performed for foundation piles, pile caps, elevator pit, and stairwell. The total depth of construction is anticipated to be no deeper than five feet (5') below existing grade surface for the foundation infrastructure. The lot is approximately 10,000 square feet with 6,500 square feet for new building construction and approximately 3,500 square feet for accessory vehicle parking.

All soils within the footprint of the future building disturbed during the excavation and installation of the foundation infrastructure will be disposed off-site. Two feet (2) of soil will be excavated and disposed off-site for the parking lot and replaced with clean fill material such as recycled concrete aggregate (RCA) meeting NYSDEC Part 375 Restricted Residential criteria. In order to address the historic fill material and slightly elevated concentrations of SVOCs, metals, PBCs, and/or pesticides detected in the soils, a Remedial Action Plan (RAP) and Construction Health and Safety Plan (CHASP) will be developed for the site. These will be prepared to support the proposed re-development of the site and detail the best management practices to be employed during construction. These reports will be submitted under separate cover.

5.1 Prior Activity

Based on an evaluation of the data and information from the Subsurface Investigation, disposal of significant amounts of hazardous waste is not suspected at this site.

5.2 Impediments to Remedial Action

There are no known impediments to remedial action at this property.

FIGURES

WITHERS STREET

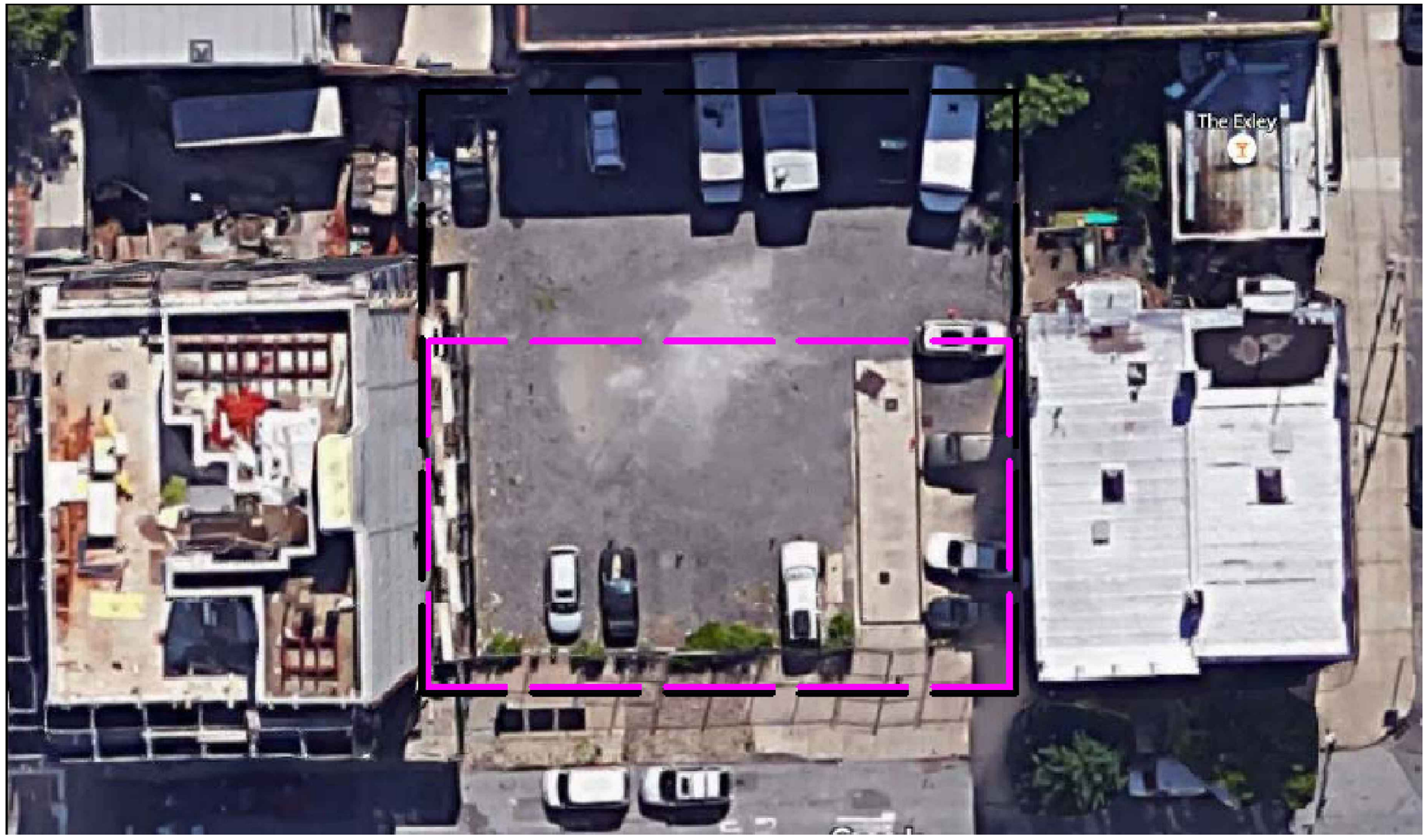

JACKSON STREET

UNION AVENUE

CREATIVE ENVIRONMENT SOLUTIONS (CES)
39 WEST 37TH STREET 14TH FLOOR
NEW YORK, NY 10018

CES

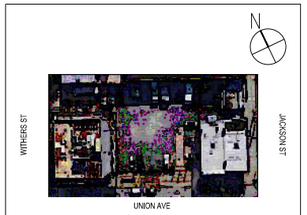

526 Union Ave
Brooklyn, NY 11211

Sampling Legend

- Monitoring Well Location
- Soil Boring Location
- Vapor Probe Locations
- Property Line
- Proposed Building Footprint
- Existing Building

Comments:

Designer:	A. ARRIGO
Drawn by:	A. ARRIGO
Checked by:	C.PUERTA
Date:	December 10, 2015

Phase II Investigation
Figure #1; General Site Location

Tryad Group
250 Greenpoint Avenue; Suite #4
Brooklyn, New York 11222

THE SKETCH IS FOR INFORMATIONAL PURPOSES ONLY
ALL QUANTITIES ARE TO BE FIELD VERIFIED

*All soil vapor probes were located approximately 15' from adjacent property boundary, CES-2-SV was located approximately 15' from building footprint boundary

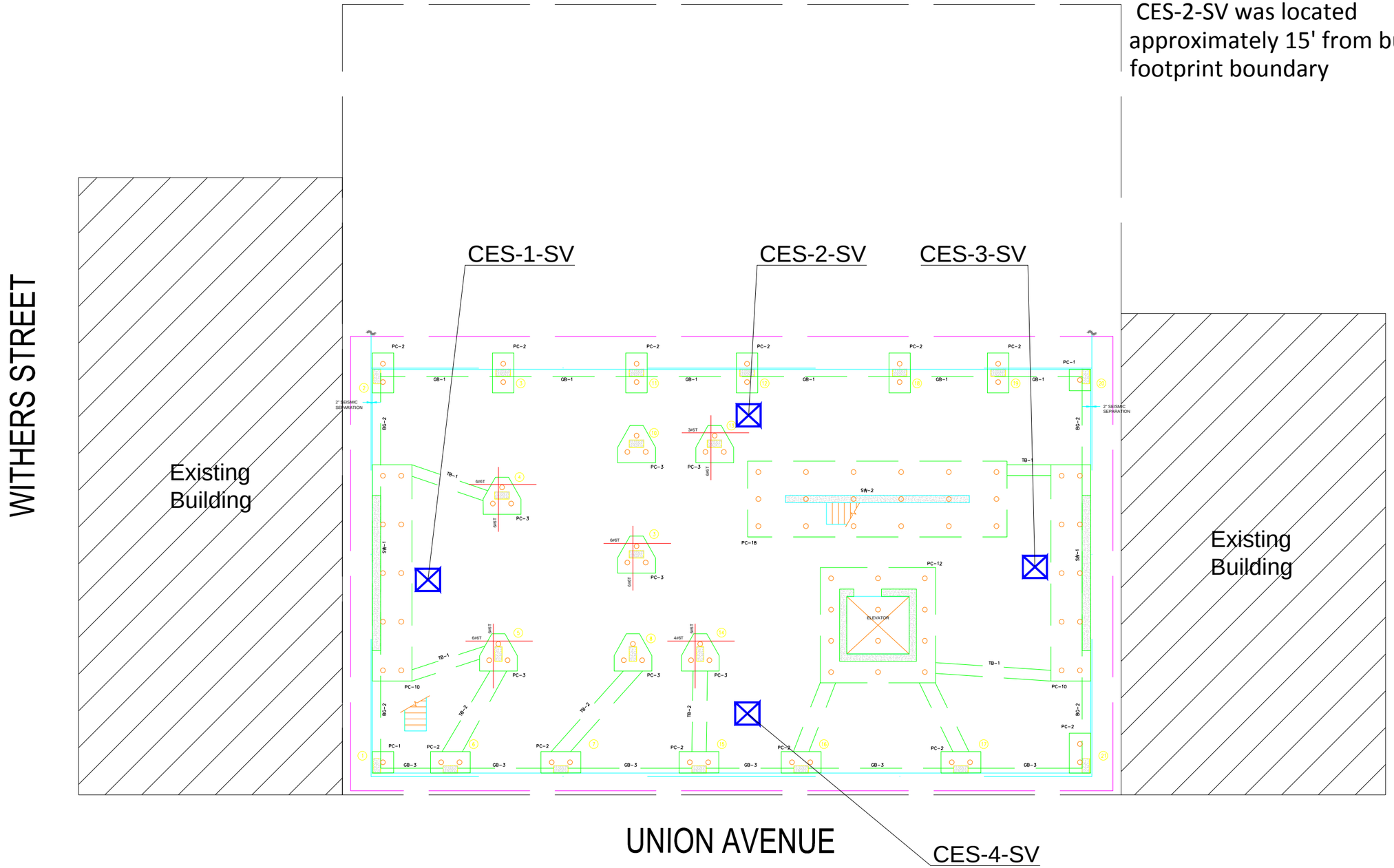

CREATIVE ENVIRONMENT SOLUTIONS (CES)
39 WEST 37TH STREET 14TH FLOOR
NEW YORK, NY 10018

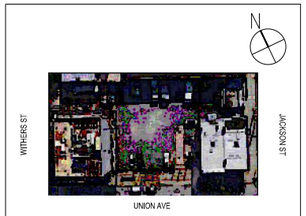

526 Union Ave
Brooklyn, NY 11211

Sampling Legend

- Monitoring Well Location
- Soil Boring Location
- Vapor Probe Locations
- Property Line
- Proposed Building Footprint
- Existing Building

Comments:

Designer:	A. ARRIGO
Drawn by:	A. ARRIGO
Checked by:	C.PUERTA
Date:	December 10, 2015

Phase II Investigation
Figure #2; Soil Vapor Probe Locations

Tryad Group
250 Greenpoint Avenue; Suite #4
Brooklyn, New York 11222

THE SKETCH IS FOR INFORMATIONAL PURPOSES ONLY
ALL QUANTITIES ARE TO BE FIELD VERIFIED

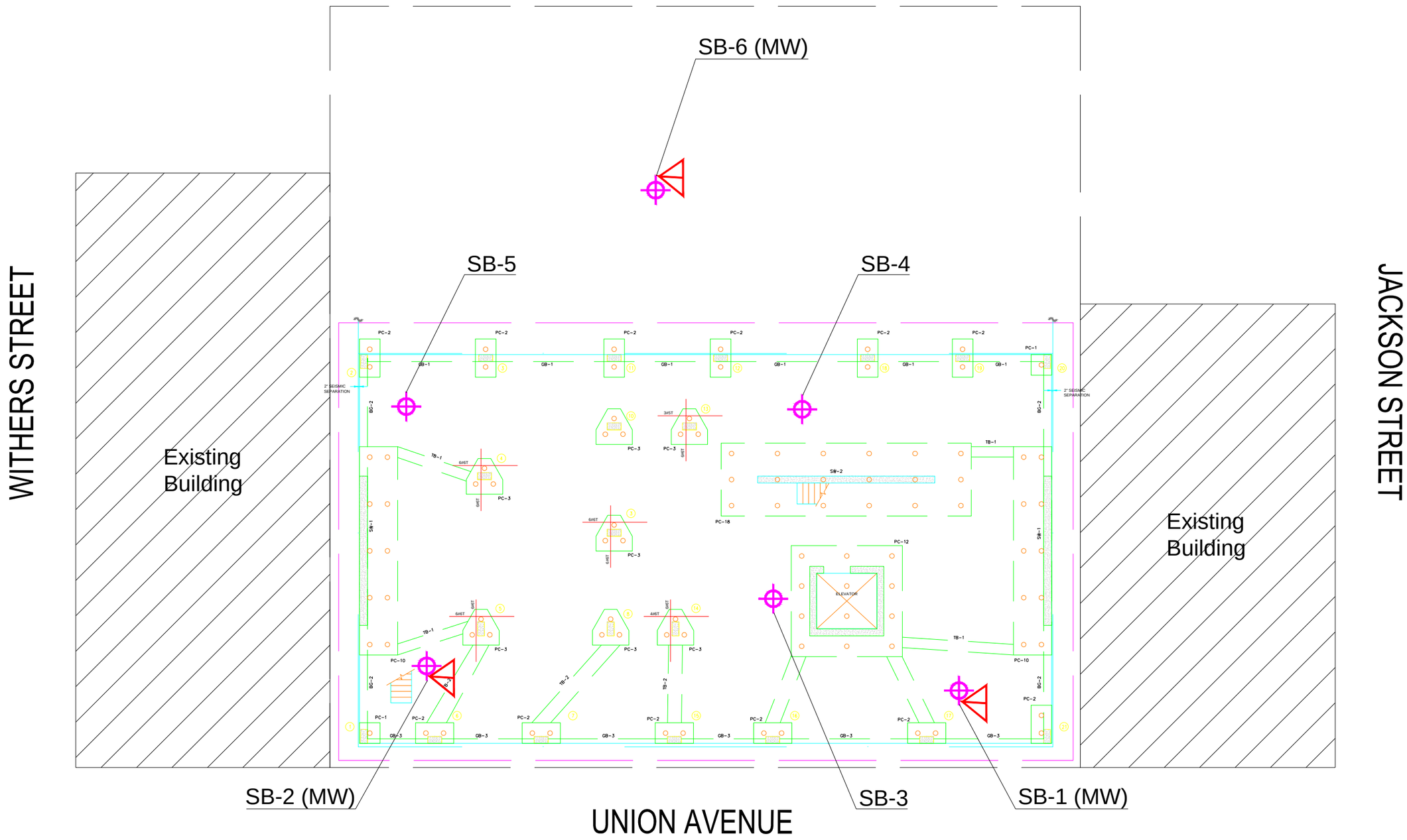

CREATIVE ENVIRONMENT SOLUTIONS (CES)
39 WEST 37TH STREET 14TH FLOOR
NEW YORK, NY 10018

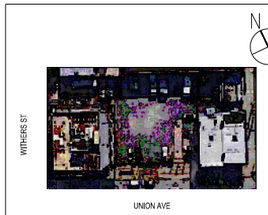

526 Union Ave
Brooklyn, NY 11211

Sampling Legend

- Monitoring Well Location
- Soil Boring Location
- Vapor Probe Locations
- Property Line
- Proposed Building Footprint
- Existing Building

Comments:

Designer:	A. ARRIGO
Drawn by:	A. ARRIGO
Checked by:	C.PUERTA
Date:	December 10, 2015

Phase II Investigation
Figure #3; Soil Boring and Monitoring Well Locations

Tryad Group
250 Greenpoint Avenue; Suite #4
Brooklyn, New York 11222

THE SKETCH IS FOR INFORMATIONAL PURPOSES ONLY
ALL QUANTITIES ARE TO BE FIELD VERIFIED

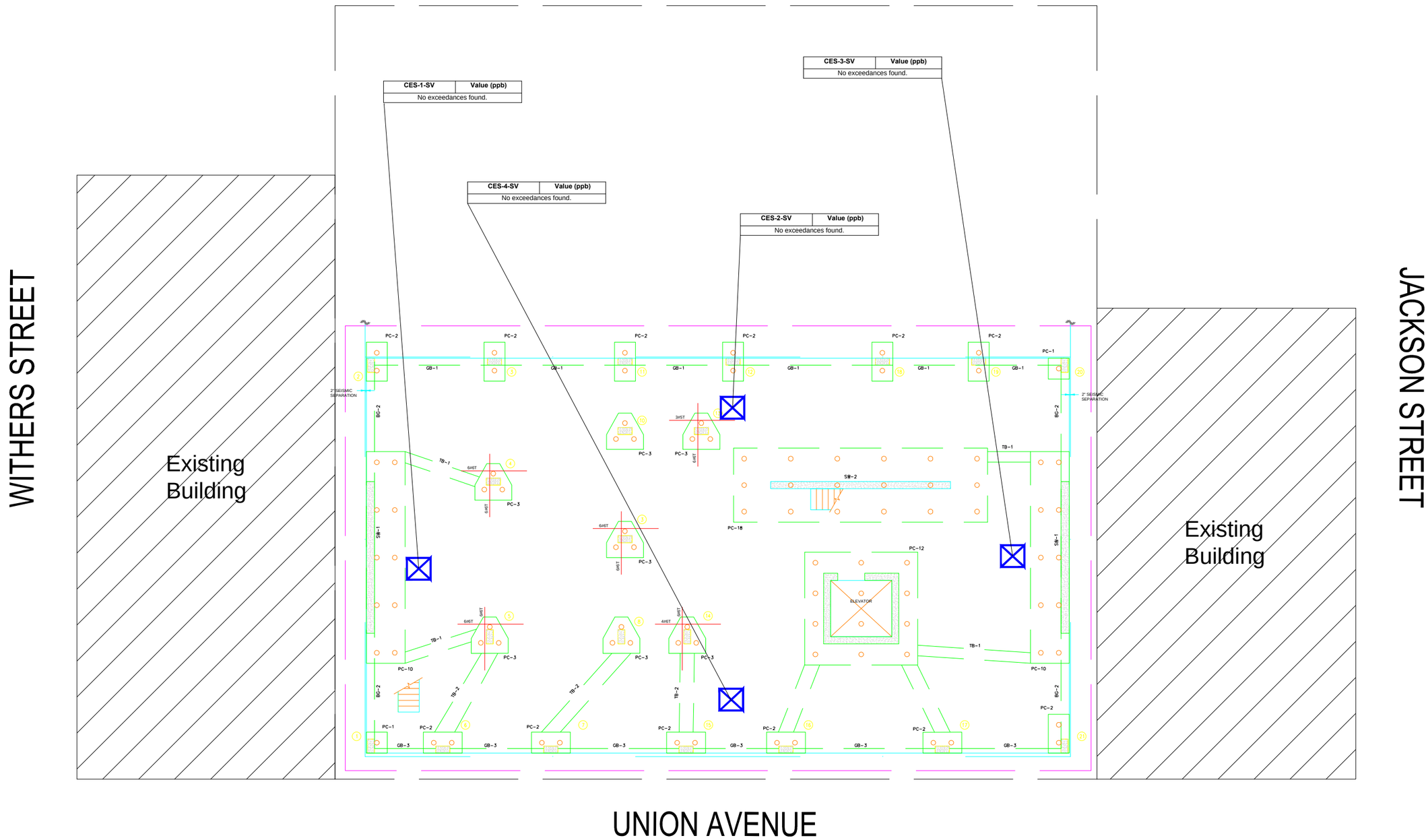

CREATIVE ENVIRONMENT SOLUTIONS (CES)
39 WEST 37TH STREET 14TH FLOOR
NEW YORK, NY 10018

526 Union Ave
Brooklyn, NY 11211

Sampling Legend

- Monitoring Well Location
- Soil Boring Location
- Vapor Probe Locations
- Property Line
- Proposed Building Footprint
- Existing Building

Comments:

Designer:	A. ARRIGO
Drawn by:	A. ARRIGO
Checked by:	C.PUERTA
Date:	December 10, 2015

Phase II Investigation
Figure #4; Soil Vapor Analytical Results

Tryad Group
250 Greenpoint Avenue; Suite #4
Brooklyn, New York 11222

THE SKETCH IS FOR INFORMATIONAL PURPOSES ONLY
ALL QUANTITIES ARE TO BE FIELD VERIFIED

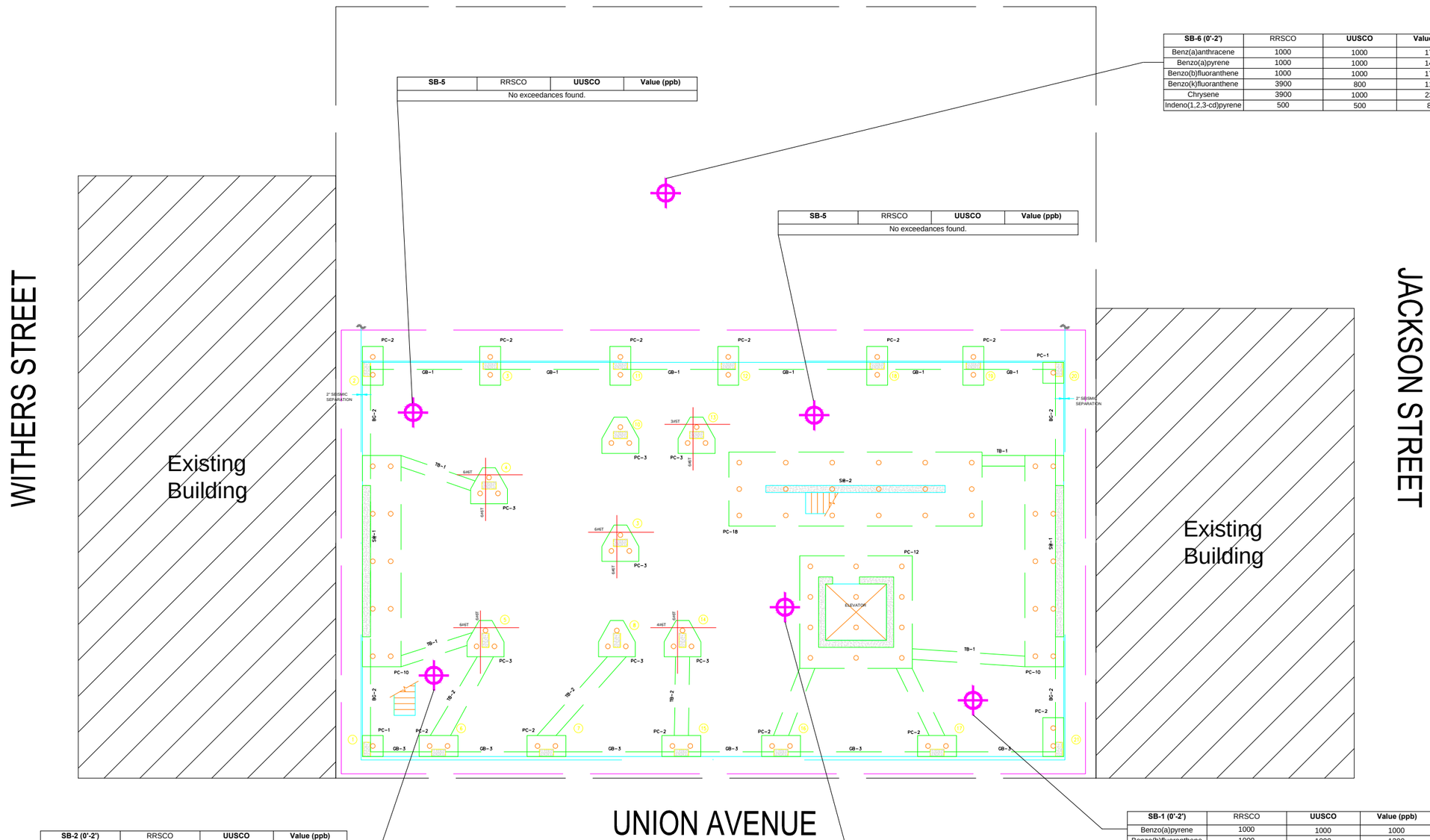

SB-5	RRSCO	UUSCO	Value (ppb)
No exceedances found.			

SB-6 (0'-2')	RRSCO	UUSCO	Value (ppb)
Benz(a)anthracene	1000	1000	1700
Benzo(a)pyrene	1000	1000	1400
Benzo(b)fluoranthene	1000	1000	1700
Benzo(k)fluoranthene	3900	800	1100
Chrysene	3900	1000	2300
Indeno(1,2,3-cd)pyrene	500	500	870

SB-5	RRSCO	UUSCO	Value (ppb)
No exceedances found.			

SB-2 (0'-2')	RRSCO	UUSCO	Value (ppb)
Benz(a)anthracene	1000	1000	4100
Benzo(a)pyrene	1000	1000	3600
Benzo(b)fluoranthene	1000	1000	3900
Benzo(k)fluoranthene	3900	800	2600
Chrysene	3900	1000	4400
Dibenz(a,h)anthracene	330	330	4500
Indeno(1,2,3-cd)pyrene	500	500	1900

SB-1 (0'-2')	RRSCO	UUSCO	Value (ppb)
Benzo(a)pyrene	1000	1000	1000
Benzo(b)fluoranthene	1000	1000	1200
Chrysene	3900	1000	1100
Indeno(1,2,3-cd)pyrene	500	500	1100

SB-3 (0'-5')	RRSCO	UUSCO	Value (ppb)
Benz(a)anthracene	1000	1000	1000
Benzo(b)fluoranthene	1000	1000	1000
Benzo(k)fluoranthene	3900	800	910
Chrysene	3900	1000	1300

CREATIVE ENVIRONMENT SOLUTIONS (CES)
39 WEST 37TH STREET 14TH FLOOR
NEW YORK, NY 10018

526 Union Ave
Brooklyn, NY 11211

Sampling Legend

- Monitoring Well Location
- Soil Boring Location
- Vapor Probe Locations
- Property Line
- Proposed Building Footprint
- Existing Building

Comments:

Designer: A. ARRIGO
Drawn by: A. ARRIGO
Checked by: C.PUERTA
Date: December 10, 2015

Phase II Investigation
Figure #5; Soil Analytical Results (VOCs and SVOCs)

Tryad Group
250 Greenpoint Avenue; Suite #4
Brooklyn, New York 11222

THE SKETCH IS FOR INFORMATIONAL PURPOSES ONLY
ALL QUANTITIES ARE TO BE FIELD VERIFIED

SB-5 (0'-2')	RRSCO	UUSCO	Value (ppm)
Copper	270	50	143
Lead	400	63	986
Mercury	0.81	0.18	0.99
Zinc	10000	109	874

SB-5 (5'-7')	RRSCO	UUSCO	Value (ppm)
Lead	400	63	71
Mercury	0.81	0.18	0.61
Zinc	10000	109	487

SB-6 (0'-2')	RRSCO	UUSCO	Value (ppm)
Arsenic	16	13	23.9
Barium	400	350	661
Cadmium	4.3	2.5	18.1
Chromium	110	30	112
Copper	270	50	1140
Lead	400	63	1930
Mercury	0.81	0.18	7.21
Nickel	310	30	128
Silver	180	2	6.69
Zinc	10000	109	2410

SB-6 (2'-4')	RRSCO	UUSCO	Value (ppm)
Copper	270	50	135
Lead	400	63	200
Mercury	0.81	0.18	0.47
Silver	180	2	4.18
Zinc	10000	109	340

SB-6 (6'-8')	RRSCO	UUSCO	Value (ppm)
Lead	400	63	152
Mercury	0.81	0.18	0.85
Zinc	10000	109	219

SB-4 (0'-2')	RRSCO	UUSCO	Value (ppm)
Arsenic	16	13	25.8
Chromium	110	30	45.5
Copper	270	50	135
Lead	400	63	340
Mercury	0.81	0.18	0.89
Zinc	10000	109	759

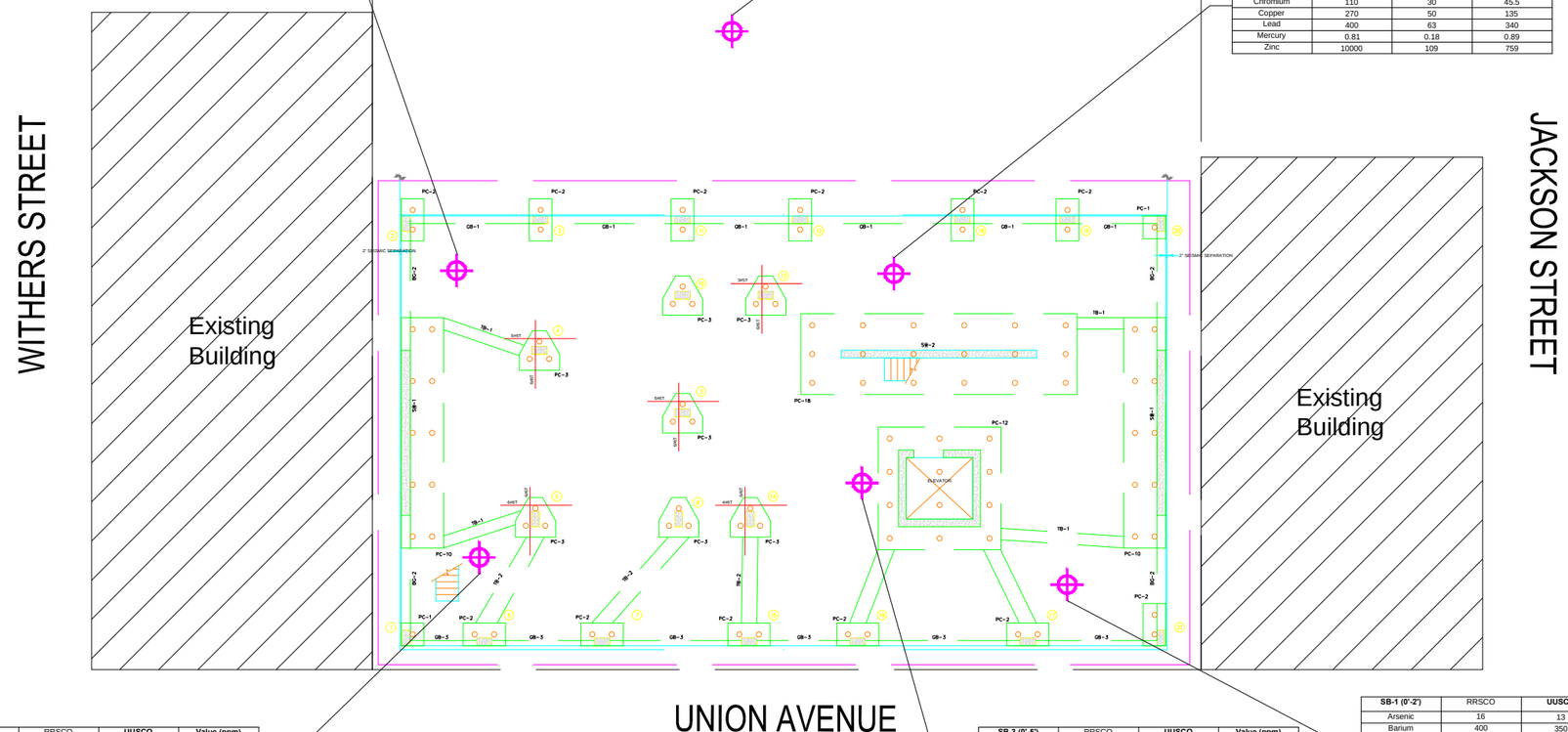

SB-2 (0'-2')	RRSCO	UUSCO	Value (ppm)
Barium	400	350	1810
Cadmium	4.3	2.5	2.6
Copper	270	50	131
Lead	400	63	5540
Mercury	0.81	0.18	0.41
Zinc	10000	109	2940

SB-2 (5'-7')	RRSCO	UUSCO	Value (ppm)
Copper	270	50	60
Lead	400	63	120
Mercury	0.81	0.18	12.8

SB-3 (0'-5')	RRSCO	UUSCO	Value (ppm)
Cadmium	4.3	2.5	2.77
Chromium	110	30	67.9
Copper	270	50	93.1
Lead	400	63	317
Mercury	0.81	0.18	1.07
Zinc	10000	109	755

SB-3 (7'-8')	RRSCO	UUSCO	Value (ppm)
Lead	400	63	90.1
Mercury	0.81	0.18	0.66

SB-3 (0'-5')	RRSCO	UUSCO	Value (ppb)
PCB 1254	1000	100	170

SB-1 (0'-2')	RRSCO	UUSCO	Value (ppm)
Arsenic	16	13	40.3
Barium	400	350	1940
Cadmium	4.3	2.5	28
Chromium	110	30	224
Copper	270	50	1160
Lead	400	63	4880
Mercury	0.81	0.18	5.66
Nickel	310	30	253
Silver	180	2	3.98
Zinc	10000	109	5710

SB-1 (5'-7')	RRSCO	UUSCO	Value (ppm)
Barium	400	350	414
Cadmium	4.3	2.5	3.18
Chromium	110	30	85.2
Lead	400	63	1330
Mercury	0.81	0.18	0.46
Zinc	10000	109	787

CREATIVE ENVIRONMENT SOLUTIONS (CES)
39 WEST 37TH STREET 14TH FLOOR
NEW YORK, NY 10018

526 Union Ave
Brooklyn, NY 11211

Sampling Legend

- Monitoring Well Location
- Soil Boring Location
- Vapor Probe Locations
- Property Line
- Proposed Building Footprint
- Existing Building

Comments:

Designer: A. ARRIGO
Drawn by: A. ARRIGO
Checked by: C.PUERTA
Date: December 10, 2015

Phase II Investigation
Figure #6; Soil Analytical Results (Metals, PCBs and Pesticides)

Tryad Group
250 Greenpoint Avenue; Suite #4
Brooklyn, New York 11222

THE SKETCH IS FOR INFORMATIONAL PURPOSES ONLY
ALL QUANTITIES ARE TO BE FIELD VERIFIED

MW-2 (7.03)	TOGS	Value (ug/L)
Aluminum	0.1	1.58
Aluminum (Dissolved)	0.1	0.153
Iron	0.3	9.4
Iron (Dissolved)	0.3	1.28
Manganese	0.3	2.17
Manganese (Dissolved)	0.3	1.98
Sodium	20	23.8
Sodium (Dissolved)	20	22.8

MW-6 (7.53)	TOGS	Value (ug/L)
Benz(a)anthracene	0.002	0.09
Benzo(a)pyrene	ND	0.08
Benzo(b)fluoranthene	0.002	0.06
Benzo(k)fluoranthene	0.002	0.06
Chrysene	0.002	0.08
Indeno(1,2,3-cd)pyrene	0.002	0.04
Aluminum	0.1	13.8
Aluminum (Dissolved)	0.1	0.187
Iron	0.3	25.3
Lead	0.025	0.187
Manganese	0.3	0.917
Manganese (Dissolved)	0.3	0.605
Sodium	20	33.9
Sodium (Dissolved)	20	32.2

MW-1 (6.86)	TOGS	Value (ug/L)
Benz(a)anthracene	0.002	0.4
Benzo(a)pyrene	ND	0.35
Benzo(b)fluoranthene	0.002	0.32
Benzo(k)fluoranthene	0.002	0.27
Chrysene	0.002	0.38
Indeno(1,2,3-cd)pyrene	0.002	0.16
Aluminum	0.1	27.2
Aluminum (Dissolved)	0.1	0.132
Iron	0.3	36.9
Lead	0.025	0.187
Manganese	0.3	1.15
Manganese (Dissolved)	0.3	2.01
Sodium	20	25.6
Sodium (Dissolved)	20	22.8

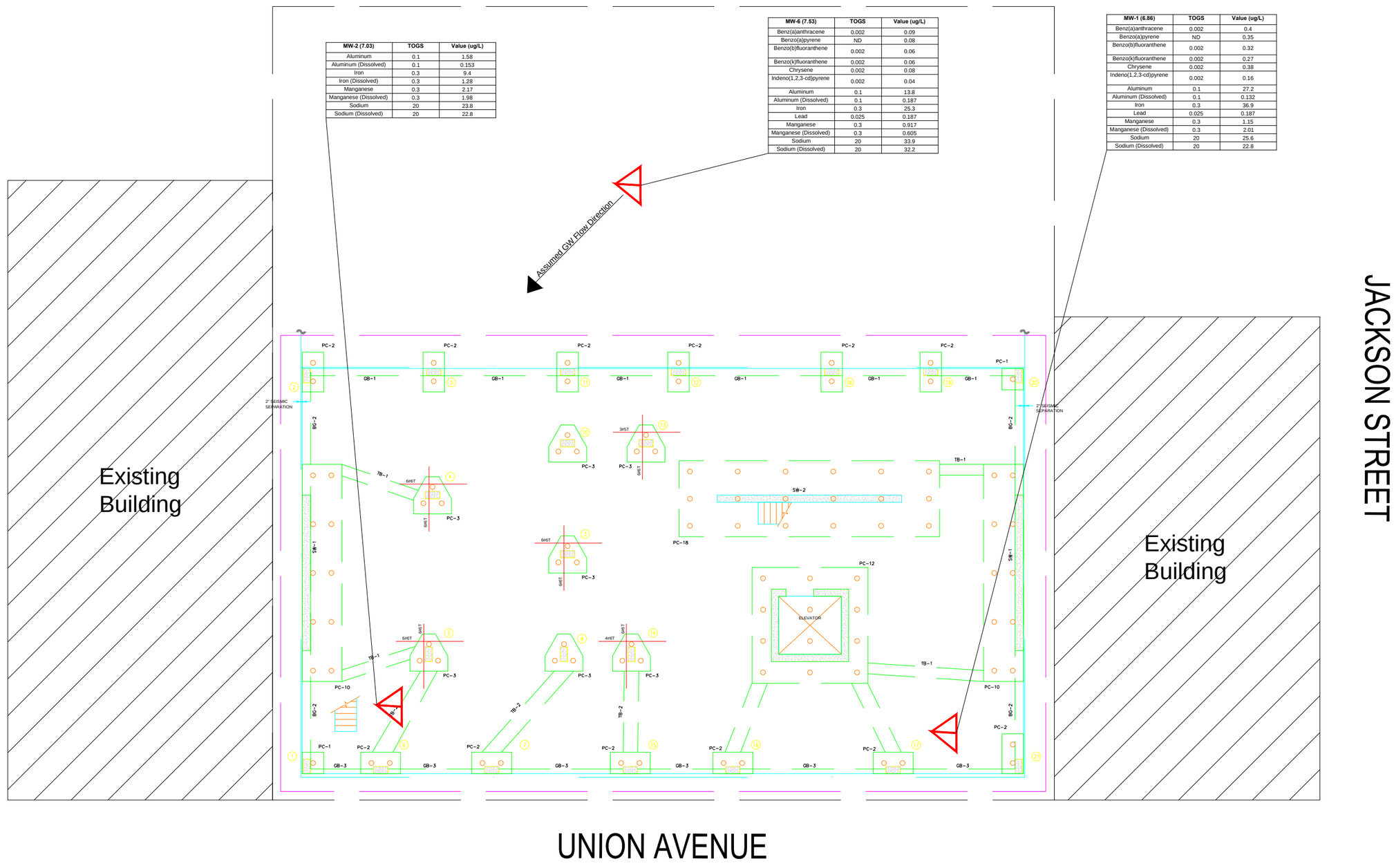

CREATIVE ENVIRONMENT SOLUTIONS (CES)
39 WEST 37TH STREET 14TH FLOOR
NEW YORK, NY 10018

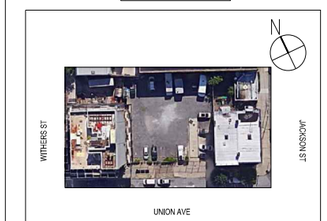

526 Union Ave
Brooklyn, NY 11211

Sampling Legend

- Monitoring Well Location
- Soil Boring Location
- Vapor Probe Locations
- Property Line
- Proposed Building Footprint
- Existing Building
- () GW Elevation

Comments:

Designer:	A. ARRIGO
Drawn by:	A. ARRIGO
Checked by:	C.PUERTA
Date:	December 10, 2015

Phase II Investigation
Figure #7; Groundwater Analytical Results

Tryad Group
250 Greenpoint Avenue; Suite #4
Brooklyn, New York 11222

THE SKETCH IS FOR INFORMATIONAL PURPOSES ONLY
ALL QUANTITIES ARE TO BE FIELD VERIFIED

TABLES

Table 1
16EHAZ0063K
Soil Analytical Results for Volatile Organic Compounds by EPA Method 8260

526 Union Avenue, Brooklyn, NY
Creative Environment Solutions, Inc.

Compound	RRSCO*	UUSCO*	SB-1 (0'-2') 11/18/15	SB-1 (5'-7') 11/18/15	SB-2 (0'-2') 11/18/15	SB-2 (5'-7') 11/18/15	SB-3 (0'-5') 11/18/15	SB-3 (7'-8') 11/18/15	SB-4 (0'-2') 11/18/15	SB-4 (5'-7') 11/18/15
Volatile Organic Compounds by 8260 - ug/kg										
1,1-Dichloroethane	26000	270	- ND	- ND	- ND	- ND	- ND	- ND	- ND	- ND
1,1-Dichloroethene	100000	330	- ND	- ND	- ND	- ND	- ND	- ND	- ND	- ND
1,1-Dichloropropene	NS	NS	- ND	- ND	- ND	- ND	- ND	- ND	- ND	- ND
1,1,1-Trichloroethane	100000	680	- ND	- ND	- ND	- ND	- ND	- ND	- ND	- ND
1,1,1,2-Tetrachloroethane	NS	NS	- ND	- ND	- ND	- ND	- ND	- ND	- ND	- ND
1,1,2-Trichloroethane	NS	NS	- ND	- ND	- ND	- ND	- ND	- ND	- ND	- ND
1,1,2-Trichlorotrifluoroethane	NS	NS	- ND	- ND	- ND	- ND	- ND	- ND	- ND	- ND
1,1,2,2-Tetrachloroethane	NS	NS	- ND	- ND	- ND	- ND	- ND	- ND	- ND	- ND
1,2-Dibromo-3-chloropropane	NS	NS	- ND	- ND	- ND	- ND	- ND	- ND	- ND	- ND
1,2-Dibromoethane	NS	NS	- ND	- ND	- ND	- ND	- ND	- ND	- ND	- ND
1,2-Dichlorobenzene	100,000	1,100	- ND	- ND	- ND	- ND	- ND	- ND	- ND	- ND
1,2-Dichloroethane	3100	20	- ND	- ND	- ND	- ND	- ND	- ND	- ND	- ND
1,2-Dichloropropane	NS	NS	- ND	- ND	- ND	- ND	- ND	- ND	- ND	- ND
1,2,3-Trichlorobenzene	NS	NS	- ND	- ND	- ND	- ND	- ND	- ND	- ND	- ND
1,2,3-Trichloropropane	NS	NS	- ND	- ND	- ND	- ND	- ND	- ND	- ND	- ND
1,2,4-Trichlorobenzene	NS	NS	- ND	- ND	- ND	- ND	- ND	- ND	- ND	- ND
1,2,4-Trimethylbenzene	52,000	3,600	- ND	- ND	- ND	- ND	- ND	- ND	- ND	- ND
1,2,4,5-Tetramethylbenzene	NS	NS	- ND	- ND	- ND	- ND	- ND	- ND	- ND	- ND
1,3-Dichlorobenzene	4,900	2,400	- ND	- ND	- ND	- ND	- ND	- ND	- ND	- ND
1,3-Dichloropropane	NS	NS	- ND	- ND	- ND	- ND	- ND	- ND	- ND	- ND
1,3,5-Trimethylbenzene	52000	8400	- ND	- ND	- ND	- ND	- ND	- ND	- ND	- ND
1,4-Dichlorobenzene	13000	1800	- ND	- ND	- ND	- ND	- ND	- ND	- ND	- ND
2-Butanone	100,000	120	- ND	- ND	- ND	- ND	- ND	- ND	- ND	- ND
2-Chloroethylvinylether	NS	NS	- ND	- ND	- ND	- ND	- ND	- ND	- ND	- ND
2-Chlorotoluene	NS	NS	- ND	- ND	- ND	- ND	- ND	- ND	- ND	- ND
2-Hexanone	NS	NS	- ND	- ND	- ND	- ND	- ND	- ND	- ND	- ND
2,2-Dichloropropane	NS	NS	- ND	- ND	- ND	- ND	- ND	- ND	- ND	- ND
4-Chlorotoluene	NS	NS	- ND	- ND	- ND	- ND	- ND	- ND	- ND	- ND
4-Isopropyltoluene	NS	NS	- ND	- ND	- ND	- ND	- ND	- ND	- ND	- ND
4-Methyl-2-pentanone	NS	NS	- ND	- ND	- ND	- ND	- ND	- ND	- ND	- ND
Acetone	100000	50	- ND	- ND	- ND	- ND	- ND	- ND	- ND	- ND
Acrylonitrile	NS	NS	- ND	- ND	- ND	- ND	- ND	- ND	- ND	- ND
Benzene	4800	60	- ND	- ND	- ND	- ND	- ND	- ND	- ND	- ND
Bromobenzene	NS	NS	- ND	- ND	- ND	- ND	- ND	- ND	- ND	- ND
Bromochloromethane	NS	NS	- ND	- ND	- ND	- ND	- ND	- ND	- ND	- ND
Bromodichloromethane	NS	NS	- ND	- ND	- ND	- ND	- ND	- ND	- ND	- ND
Bromoform	NS	NS	- ND	- ND	- ND	- ND	- ND	- ND	- ND	- ND
Bromomethane	NS	NS	- ND	- ND	- ND	- ND	- ND	- ND	- ND	- ND
cis-1,2-Dichloroethene	100,000	250	- ND	- ND	- ND	- ND	- ND	- ND	- ND	- ND
cis-1,3-Dichloropropene	NS	NS	- ND	- ND	- ND	- ND	- ND	- ND	- ND	- ND
Carbon disulfide	NS	NS	- ND	- ND	- ND	- ND	- ND	- ND	- ND	- ND
Carbon tetrachloride	2400	760	- ND	- ND	- ND	- ND	- ND	- ND	- ND	- ND
Chlorobenzene	100,000	1,100	- ND	- ND	- ND	- ND	- ND	- ND	- ND	- ND

Table 1
16EHAZ0063K
Soil Analytical Results for Volatile Organic Compounds by EPA Method 8260

526 Union Avenue, Brooklyn, NY
Creative Environment Solutions, Inc.

Compound	RRSCO*	UUSCO*	SB-1 (0'-2') 11/18/15	SB-1 (5'-7') 11/18/15	SB-2 (0'-2') 11/18/15	SB-2 (5'-7') 11/18/15	SB-3 (0'-5') 11/18/15	SB-3 (7'-8') 11/18/15	SB-4 (0'-2') 11/18/15	SB-4 (5'-7') 11/18/15
Volatile Organic Compounds by 8260 - ug/kg										
Chloroethane	NS	NS	- ND	- ND	- ND	- ND	- ND	- ND	- ND	- ND
Chloroform	49000	370	- ND	- ND	- ND	- ND	- ND	- ND	- ND	- ND
Chloromethane	NS	NS	- ND	- ND	- ND	- ND	- ND	- ND	- ND	- ND
Dibromochloromethane	NS	NS	- ND	- ND	- ND	- ND	- ND	- ND	- ND	- ND
Dibromomethane	NS	NS	- ND	- ND	- ND	- ND	- ND	- ND	- ND	- ND
Dibromofluoromethane	NS	NS	- ND	- ND	- ND	- ND	- ND	- ND	- ND	- ND
Ethylbenzene	41,000	1,000	- ND	- ND	- ND	- ND	- ND	- ND	- ND	- ND
Hexachlorobutadiene	NS	NS	- ND	- ND	- ND	- ND	- ND	- ND	- ND	- ND
Isopropylbenzene	NS	NS	- ND	- ND	- ND	- ND	- ND	- ND	- ND	- ND
m,p-Xylene	100000	260	- ND	- ND	- ND	- ND	- ND	- ND	- ND	- ND
Methyl tert-butyl ether	100,000	930	- ND	- ND	- ND	- ND	- ND	- ND	- ND	- ND
Methylene chloride	100000	50	- ND	- ND	- ND	- ND	- ND	- ND	- ND	- ND
n-Butylbenzene	100,000	12,000	- ND	- ND	- ND	- ND	- ND	- ND	- ND	- ND
n-Propylbenzene	100,000	3,900	- ND	- ND	- ND	- ND	- ND	- ND	- ND	- ND
Naphthalene	NS	NS	- ND	- ND	- ND	- ND	- ND	- ND	- ND	- ND
o-Xylene	100000	260	- ND	- ND	- ND	- ND	- ND	- ND	- ND	- ND
p-Diethylbenzene	NS	NS	- ND	- ND	- ND	- ND	- ND	- ND	- ND	- ND
p-Ethyltoluene	NS	NS	- ND	- ND	- ND	- ND	- ND	- ND	- ND	- ND
sec-Butylbenzene	100,000	11,000	- ND	- ND	- ND	- ND	- ND	- ND	- ND	- ND
Styrene	NS	NS	- ND	- ND	- ND	- ND	- ND	- ND	- ND	- ND
t-1,2-Dichloroethene	100,000	190	- ND	- ND	- ND	- ND	- ND	- ND	- ND	- ND
t-1,3-Dichloropropene	NS	NS	- ND	- ND	- ND	- ND	- ND	- ND	- ND	- ND
tert-Butylbenzene	100,000	5,900	- ND	- ND	- ND	- ND	- ND	- ND	- ND	- ND
Tertiary butyl alcohol	NS	NS	- ND	- ND	- ND	- ND	- ND	- ND	- ND	- ND
Tetrachloroethene	19,000	1,300	- ND	- ND	- ND	- ND	- ND	- ND	- ND	- ND
Toluene	100000	700	- ND	- ND	- ND	- ND	- ND	- ND	- ND	- ND
Trichloroethene	21000	470	- ND	- ND	- ND	- ND	- ND	- ND	- ND	- ND
Trichlorofluoromethane	NS	NS	- ND	- ND	- ND	- ND	- ND	- ND	- ND	- ND
Vinyl chloride	900	20	- ND	- ND	- ND	- ND	- ND	- ND	- ND	- ND

Notes:
(1) NYSDEC 6 NYCRR Environmental Remediation Programs Part 375 Unrestriced Use of Soil Cleanup Objective Table 375-6.8a 12/06.
ND - Not detected above detection limit
Bold/highlighted - indicated exceedance of the Unrestricted Use Soil Cleanup Objectives
Bold/highlighted - indicated exceedance of the Restricted Use Residential Soil Cleanup Objectives
*-Sum of all isomers
B - Compound detected in the laboratory blank
J - Estimated concentration
NS - No Standard

Table 1
16EHAZ0063K
Soil Analytical Results for Volatile Organic Compounds by EPA Method 8260

526 Union Avenue, Brooklyn, NY
Creative Environment Solutions, Inc.

Compound	RRSCO*	UUSCO*	SB-5 (0'-2') 11/18/15		SB-5 (5'-7') 11/18/15		SB-6 (0'-2') 11/18/15		SB-6 (2'-4') 11/18/15		SB-6 (6'-8') 11/18/15	
Volatile Organic Compounds by 8260 - ug/kg												
1,1-Dichloroethane	26000	270	-	ND	-	ND	-	ND	-	ND	-	ND
1,1-Dichloroethene	100000	330	-	ND	-	ND	-	ND	-	ND	-	ND
1,1-Dichloropropene	NS	NS	-	ND	-	ND	-	ND	-	ND	-	ND
1,1,1-Trichloroethane	100000	680	-	ND	-	ND	-	ND	-	ND	-	ND
1,1,1,2-Tetrachloroethane	NS	NS	-	ND	-	ND	-	ND	-	ND	-	ND
1,1,2-Trichloroethane	NS	NS	-	ND	-	ND	-	ND	-	ND	-	ND
1,1,2-Trichlorotrifluoroethane	NS	NS	-	ND	-	ND	-	ND	-	ND	-	ND
1,1,2,2-Tetrachloroethane	NS	NS	-	ND	-	ND	-	ND	-	ND	-	ND
1,2-Dibromo-3-chloropropane	NS	NS	-	ND	-	ND	-	ND	-	ND	-	ND
1,2-Dibromoethane	NS	NS	-	ND	-	ND	-	ND	-	ND	-	ND
1,2-Dichlorobenzene	100,000	1,100	-	ND	-	ND	-	ND	-	ND	-	ND
1,2-Dichloroethane	3100	20	-	ND	-	ND	-	ND	-	ND	-	ND
1,2-Dichloropropane	NS	NS	-	ND	-	ND	-	ND	-	ND	-	ND
1,2,3-Trichlorobenzene	NS	NS	-	ND	-	ND	-	ND	-	ND	-	ND
1,2,3-Trichloropropane	NS	NS	-	ND	-	ND	-	ND	-	ND	-	ND
1,2,4-Trichlorobenzene	NS	NS	-	ND	-	ND	-	ND	-	ND	-	ND
1,2,4-Trimethylbenzene	52,000	3,600	-	ND	-	ND	-	ND	-	ND	-	ND
1,2,4,5-Tetramethylbenzene	NS	NS	-	ND	-	ND	-	ND	-	ND	-	ND
1,3-Dichlorobenzene	4,900	2,400	-	ND	-	ND	-	ND	-	ND	-	ND
1,3-Dichloropropane	NS	NS	-	ND	-	ND	-	ND	-	ND	-	ND
1,3,5-Trimethylbenzene	52000	8400	-	ND	-	ND	-	ND	-	ND	-	ND
1,4-Dichlorobenzene	13000	1800	-	ND	-	ND	-	ND	-	ND	-	ND
2-Butanone	100,000	120	-	ND	-	ND	-	ND	-	ND	-	ND
2-Chloroethylvinylether	NS	NS	-	ND	-	ND	-	ND	-	ND	-	ND
2-Chlorotoluene	NS	NS	-	ND	-	ND	-	ND	-	ND	-	ND
2-Hexanone	NS	NS	-	ND	-	ND	-	ND	-	ND	-	ND
2,2-Dichloropropane	NS	NS	-	ND	-	ND	-	ND	-	ND	-	ND
4-Chlorotoluene	NS	NS	-	ND	-	ND	-	ND	-	ND	-	ND
4-Isopropyltoluene	NS	NS	-	ND	-	ND	-	ND	-	ND	-	ND
4-Methyl-2-pentanone	NS	NS	-	ND	-	ND	-	ND	-	ND	-	ND
Acetone	100000	50	-	ND	-	ND	-	ND	24		22	
Acrylonitrile	NS	NS	-	ND	-	ND	-	ND	-	ND	-	ND
Benzene	4800	60	-	ND	-	ND	-	ND	-	ND	-	ND
Bromobenzene	NS	NS	-	ND	-	ND	-	ND	-	ND	-	ND
Bromochloromethane	NS	NS	-	ND	-	ND	-	ND	-	ND	-	ND
Bromodichloromethane	NS	NS	-	ND	-	ND	-	ND	-	ND	-	ND
Bromoform	NS	NS	-	ND	-	ND	-	ND	-	ND	-	ND
Bromomethane	NS	NS	-	ND	-	ND	-	ND	-	ND	-	ND
cis-1,2-Dichloroethene	100,000	250	-	ND	-	ND	-	ND	-	ND	-	ND
cis-1,3-Dichloropropene	NS	NS	-	ND	-	ND	-	ND	-	ND	-	ND
Carbon disulfide	NS	NS	-	ND	-	ND	-	ND	-	ND	-	ND
Carbon tetrachloride	2400	760	-	ND	-	ND	-	ND	-	ND	-	ND
Chlorobenzene	100,000	1,100	-	ND	-	ND	-	ND	-	ND	-	ND

Table 1
16EHAZ0063K
Soil Analytical Results for Volatile Organic Compounds by EPA Method 8260

526 Union Avenue, Brooklyn, NY
Creative Environment Solutions, Inc.

Compound	RRSCO*	UUSCO*	SB-5 (0'-2') 11/18/15		SB-5 (5'-7') 11/18/15		SB-6 (0'-2') 11/18/15		SB-6 (2'-4') 11/18/15		SB-6 (6'-8') 11/18/15	
Volatile Organic Compounds by 8260 - ug/kg												
Chloroethane	NS	NS	-	ND	-	ND	-	ND	-	ND	-	ND
Chloroform	49000	370	-	ND	-	ND	-	ND	-	ND	-	ND
Chloromethane	NS	NS	-	ND	-	ND	-	ND	-	ND	-	ND
Dibromochloromethane	NS	NS	-	ND	-	ND	-	ND	-	ND	-	ND
Dibromomethane	NS	NS	-	ND	-	ND	-	ND	-	ND	-	ND
Dibromofluoromethane	NS	NS	-	ND	-	ND	-	ND	-	ND	-	ND
Ethylbenzene	41,000	1,000	-	ND	-	ND	-	ND	-	ND	-	ND
Hexachlorobutadiene	NS	NS	-	ND	-	ND	-	ND	-	ND	-	ND
Isopropylbenzene	NS	NS	-	ND	-	ND	-	ND	-	ND	-	ND
m,p-Xylene	100000	260	-	ND	-	ND	-	ND	-	ND	-	ND
Methyl tert-butyl ether	100,000	930	-	ND	-	ND	-	ND	-	ND	-	ND
Methylene chloride	100000	50	-	ND	-	ND	-	ND	-	ND	-	ND
n-Butylbenzene	100,000	12,000	-	ND	-	ND	-	ND	-	ND	-	ND
n-Propylbenzene	100,000	3,900	-	ND	-	ND	-	ND	-	ND	-	ND
Naphthalene	NS	NS	-	ND	-	ND	-	ND	-	ND	-	ND
o-Xylene	100000	260	-	ND	-	ND	-	ND	-	ND	-	ND
p-Diethylbenzene	NS	NS	-	ND	-	ND	-	ND	-	ND	-	ND
p-Ethyltoluene	NS	NS	-	ND	-	ND	-	ND	-	ND	-	ND
sec-Butylbenzene	100,000	11,000	-	ND	-	ND	-	ND	-	ND	-	ND
Styrene	NS	NS	-	ND	-	ND	-	ND	-	ND	-	ND
t-1,2-Dichloroethene	100,000	190	-	ND	-	ND	-	ND	-	ND	-	ND
t-1,3-Dichloropropene	NS	NS	-	ND	-	ND	-	ND	-	ND	-	ND
tert-Butylbenzene	100,000	5,900	-	ND	-	ND	-	ND	-	ND	-	ND
Tertiary butyl alcohol	NS	NS	-	ND	-	ND	-	ND	-	ND	-	ND
Tetrachloroethene	19,000	1,300	-	ND	-	ND	-	ND	-	ND	-	ND
Toluene	100000	700	-	ND	-	ND	-	ND	-	ND	-	ND
Trichloroethene	21000	470	-	ND	-	ND	-	ND	-	ND	-	ND
Trichlorofluoromethane	NS	NS	-	ND	-	ND	-	ND	-	ND	-	ND
Vinyl chloride	900	20	-	ND	-	ND	-	ND	-	ND	-	ND

Notes:
(1) NYSDEC 6 NYCRR Environmental Remediation Programs Part 375 Unrestriced Use of Soil Cleanup Objective Table 375-6.8a 12/06
NS - No standard
ND - Not detected above detection limit
Bold/highlighted - indicated exceedance of the Unrestricted Use Soil Cleanup Objectives
Bold/highlighted - indicated exceedance of the Restricted Use Residential Soil Cleanup Objectives
*-Sum of all isomers
B - Compound detected in the laboratory blank
J - Estimated concentration

Table 2
16EHAZ0063K Semi Volatile Organic Compounds by EPA Method 8260

526 Union Avenue, Brooklyn, NY
Creative Environment Solutions, Inc.

Compound	RRSCO*	UUSCO*	SB-1 (0'-2') 11/18/15		SB-1 (5'-7') 11/18/15		SB-2 (0'-2') 11/18/15		SB-2 (5'-7') 11/18/15		SB-3 (0'-5') 11/18/15		SB-3 (7'-8') 11/18/15	
Semi-volatile Organic Compounds by 8270 - ug/kg														
1,2,4,5-Tetrachlorobenzene	NS	NS	-	ND	-	ND	-	ND	-	ND	-	ND	-	ND
1,2,4-Trichlorobenzene	NS	NS	-	ND	-	ND	-	ND	-	ND	-	ND	-	ND
1,2-Dichlorobenzene	100000	1100	-	ND	-	ND	-	ND	-	ND	-	ND	-	ND
1,2-Diphenylhydrazine	NS	NS	-	ND	-	ND	-	ND	-	ND	-	ND	-	ND
1,3-Dichlorobenzene	49000	2400	-	ND	-	ND	-	ND	-	ND	-	ND	-	ND
1,4-Dichlorobenzene	13000	1800	-	ND	-	ND	-	ND	-	ND	-	ND	-	ND
2,4,5-Trichlorophenol	NS	NS	-	ND	-	ND	-	ND	-	ND	-	ND	-	ND
2,4,6-Trichlorophenol	NS	NS	-	ND	-	ND	-	ND	-	ND	-	ND	-	ND
2,4-Dichlorophenol	NS	NS	-	ND	-	ND	-	ND	-	ND	-	ND	-	ND
2,4-Dimethylphenol	NS	NS	-	ND	-	ND	-	ND	-	ND	-	ND	-	ND
2,4-Dinitrophenol	NS	NS	-	ND	-	ND	-	ND	-	ND	-	ND	-	ND
2,4-Dinitrotoluene	NS	NS	-	ND	-	ND	-	ND	-	ND	-	ND	-	ND
2,6-Dinitrotoluene	NS	NS	-	ND	-	ND	-	ND	-	ND	-	ND	-	ND
2-Chloronaphthalene	NS	NS	-	ND	-	ND	-	ND	-	ND	-	ND	-	ND
2-Chlorophenol	NS	NS	-	ND	-	ND	-	ND	-	ND	-	ND	-	ND
2-Methylnaphthalene	NS	NS	-	ND	-	ND	310		-	ND	-	ND	-	ND
2-Methylphenol (o-cresol)	100,000	330	-	ND	-	ND	-	ND	-	ND	-	ND	-	ND
2-Nitroaniline	NS	NS	-	ND	-	ND	-	ND	-	ND	-	ND	-	ND
2-Nitrophenol	NS	NS	-	ND	-	ND	-	ND	-	ND	-	ND	-	ND
3&4-Methylphenol (m&p-cresol)	34000	330	-	ND	-	ND	-	ND	-	ND	-	ND	-	ND
3,3'-Dichlorobenzidine	NS	NS	-	ND	-	ND	-	ND	-	ND	-	ND	-	ND
3-Nitroaniline	NS	NS	-	ND	-	ND	-	ND	-	ND	-	ND	-	ND
4,6-Dinitro-2-methylphenol	NS	NS	-	ND	-	ND	-	ND	-	ND	-	ND	-	ND
4-Bromophenyl phenyl ether	NS	NS	-	ND	-	ND	-	ND	-	ND	-	ND	-	ND
4-Chloro-3-methylphenol	NS	NS	-	ND	-	ND	-	ND	-	ND	-	ND	-	ND
4-Chloroaniline	NS	NS	-	ND	-	ND	-	ND	-	ND	-	ND	-	ND
4-Chlorophenyl phenyl ether	NS	NS	-	ND	-	ND	-	ND	-	ND	-	ND	-	ND
4-Nitroaniline	NS	NS	-	ND	-	ND	-	ND	-	ND	-	ND	-	ND
4-Nitrophenol	NS	NS	-	ND	-	ND	-	ND	-	ND	-	ND	-	ND

Table 2
16EHAZ0063K Semi Volatile Organic Compounds by EPA Method 8260

526 Union Avenue, Brooklyn, NY
Creative Environment Solutions, Inc.

Compound	RRSCO*	UUSCO*	SB-1 (0'-2') 11/18/15		SB-1 (5'-7') 11/18/15		SB-2 (0'-2') 11/18/15		SB-2 (5'-7') 11/18/15		SB-3 (0'-5') 11/18/15		SB-3 (7'-8') 11/18/15	
Semi-volatile Organic Compounds by 8270 - ug/kg														
Acenaphthene	100,000	20,000	-	ND	-	ND	1200		-	ND	320		-	ND
Acenaphthylene	100,000	100,000	-	ND	-	ND	-	ND	-	ND	-	ND	-	ND
Acetophenone	NS	NS	-	ND	-	ND	-	ND	-	ND	-	ND	-	ND
Aniline	NS	NS	-	ND	-	ND	-	ND	-	ND	-	ND	-	ND
Anthracene	100,000	100,000	-	ND	-	ND	2300		-	ND	430		-	ND
Benz(a)anthracene	1,000	1,000	870		-	ND	4100		-	ND	1000		-	ND
Benzidine	NS	NS	-	ND	-	ND	-	ND	-	ND	-	ND	-	ND
Benzo(a)pyrene	1,000	1,000	1000		-	ND	3600		-	ND	910		-	ND
Benzo(b)fluoranthene	1,000	1,000	1200		-	ND	3900		-	ND	1000		-	ND
Benzo(ghi)perylene	100000	100000	1400		300		1900		-	ND	420		-	ND
Benzo(k)fluoranthene	3,900	800	780		-	ND	2600		-	ND	910		-	ND
Benzoic acid	NS	NS	-	ND	-	ND	-	ND	-	ND	-	ND	-	ND
Benzyl butyl phthalate	NS	NS	-	ND	-	ND	-	ND	-	ND	-	ND	-	ND
Bis(2-chloroethoxy)methane	NS	NS	-	ND	-	ND	-	ND	-	ND	-	ND	-	ND
Bis(2-chloroethyl)ether	NS	NS	-	ND	-	ND	-	ND	-	ND	-	ND	-	ND
Bis(2-chloroisopropyl)ether	NS	NS	-	ND	-	ND	-	ND	-	ND	-	ND	-	ND
Bis(2-ethylhexyl)phthalate	NS	NS	-	ND	-	ND	-	ND	-	ND	-	ND	-	ND
Carbazole	NS	NS	-	ND	-	ND	1000		-	ND	-	ND	-	ND
Chrysene	3,900	1,000	1100		-	ND	4400		-	ND	1300		-	ND
Dibenz(a,h)anthracene	330	330	-	ND	-	ND	4500		-	ND	-	ND	-	ND
Dibenzofuran	NS	NS	-	ND	-	ND	900		-	ND	-	ND	-	ND
Diethyl phthalate	NS	NS	-	ND	-	ND	-	ND	-	ND	-	ND	-	ND
Dimethylphthalate	NS	NS	-	ND	-	ND	-	ND	-	ND	-	ND	-	ND
Di-n-butylphthalate	NS	NS	-	ND	-	ND	-	ND	-	ND	-	ND	-	ND
Di-n-octylphthalate	NS	NS	-	ND	-	ND	-	ND	-	ND	-	ND	-	ND
Fluoranthene	100000	100000	1300		-	ND	9700		-	ND	2800		-	ND
Fluorene	100,000	30,000	-	ND	-	ND	980		-	ND	320		-	ND
Hexachlorobenzene	NS	NS	-	ND	-	ND	-	ND	-	ND	-	ND	-	ND
Hexachlorobutadiene	NS	NS	-	ND	-	ND	-	ND	-	ND	-	ND	-	ND
Hexachlorocyclopentadiene	NS	NS	-	ND	-	ND	-	ND	-	ND	-	ND	-	ND
Hexachloroethane	NS	NS	-	ND	-	ND	-	ND	-	ND	-	ND	-	ND
Indeno(1,2,3-cd)pyrene	500	500	1100		-	ND	1900		-	ND	460		-	ND
Isophorone	NS	NS	-	ND	-	ND	-	ND	-	ND	-	ND	-	ND
Naphthalene	100,000	12,000	-	ND	-	ND	-	ND	-	ND	-	ND	-	ND
Nitrobenzene	NS	NS	-	ND	-	ND	-	ND	-	ND	-	ND	-	ND
N-Nitrosodimethylamine	NS	NS	-	ND	-	ND	-	ND	-	ND	-	ND	-	ND
N-Nitrosodi-n-propylamine	NS	NS	-	ND	-	ND	-	ND	-	ND	-	ND	-	ND
N-Nitrosodiphenylamine	NS	NS	-	ND	-	ND	-	ND	-	ND	-	ND	-	ND
Pentachloronitrobenzene	NS	NS	-	ND	-	ND	-	ND	-	ND	-	ND	-	ND
Pentachlorophenol	NS	NS	-	ND	-	ND	-	ND	-	ND	-	ND	-	ND
Phenanthrene	100,000	100,000	740		-	ND	11000		-	ND	2800		-	ND
Phenol	100,000	330	-	ND	-	ND	-	ND	-	ND	-	ND	-	ND
Pyrene	100,000	100,000	1500		-	ND	8300		-	ND	2400		-	ND
Pyridine	NS	NS	-	ND	-	ND	-	ND	-	ND	-	ND	-	ND

Notes:
(1) NYSDEC 6 NYCRR Environmental Remediation Programs Part 375 Unrestriced Use of Soil Cleanup
NS - No standard
ND - Not detected above detection limit
Bold/highlighted - indicated exceedance of the Unrestricted Use Soil Cleanup Objectives
Bold/highlighted - indicated exceedance of the Restricted Use Residential Soil Cleanup Objectives
*-Sum of all isomers
B - Compound detected in the laboratory blank
J - Estimated concentration

Table 2
16EHAZ0063K Semi Volatile Organic Compounds by EPA Method 8260

526 Union Avenue, Brooklyn, NY
Creative Environment Solutions, Inc.

Compound	RRSCO*	UUSCO*	SB-4 (0'-2') 11/18/15		SB-4 (5'-7') 11/18/15		SB-5 (0'-2') 11/18/15		SB-5 (5'-7') 11/18/15		SB-6 (0'-2') 11/18/15		SB-6 (2'-4') 11/18/15		SB-6 (6'-8') 11/18/15	
Semi-volatile Organic Compounds by 8270 - ug/kg																
1,2,4,5-Tetrachlorobenzene	NS	NS	-	ND	-	ND	-	ND	-	ND	-	ND	-	ND	-	ND
1,2,4-Trichlorobenzene	NS	NS	-	ND	-	ND	-	ND	-	ND	-	ND	-	ND	-	ND
1,2-Dichlorobenzene	100000	1100	-	ND	-	ND	-	ND	-	ND	-	ND	-	ND	-	ND
1,2-Diphenylhydrazine	NS	NS	-	ND	-	ND	-	ND	-	ND	-	ND	-	ND	-	ND
1,3-Dichlorobenzene	49000	2400	-	ND	-	ND	-	ND	-	ND	-	ND	-	ND	-	ND
1,4-Dichlorobenzene	13000	1800	-	ND	-	ND	-	ND	-	ND	-	ND	-	ND	-	ND
2,4,5-Trichlorophenol	NS	NS	-	ND	-	ND	-	ND	-	ND	-	ND	-	ND	-	ND
2,4,6-Trichlorophenol	NS	NS	-	ND	-	ND	-	ND	-	ND	-	ND	-	ND	-	ND
2,4-Dichlorophenol	NS	NS	-	ND	-	ND	-	ND	-	ND	-	ND	-	ND	-	ND
2,4-Dimethylphenol	NS	NS	-	ND	-	ND	-	ND	-	ND	-	ND	-	ND	-	ND
2,4-Dinitrophenol	NS	NS	-	ND	-	ND	-	ND	-	ND	-	ND	-	ND	-	ND
2,4-Dinitrotoluene	NS	NS	-	ND	-	ND	-	ND	-	ND	-	ND	-	ND	-	ND
2,6-Dinitrotoluene	NS	NS	-	ND	-	ND	-	ND	-	ND	-	ND	-	ND	-	ND
2-Chloronaphthalene	NS	NS	-	ND	-	ND	-	ND	-	ND	-	ND	-	ND	-	ND
2-Chlorophenol	NS	NS	-	ND	-	ND	-	ND	-	ND	-	ND	-	ND	-	ND
2-Methylnaphthalene	NS	NS	-	ND	-	ND	-	ND	-	ND	-	ND	-	ND	-	ND
2-Methylphenol (o-cresol)	100,000	330	-	ND	-	ND	-	ND	-	ND	-	ND	-	ND	-	ND
2-Nitroaniline	NS	NS	-	ND	-	ND	-	ND	-	ND	-	ND	-	ND	-	ND
2-Nitrophenol	NS	NS	-	ND	-	ND	-	ND	-	ND	-	ND	-	ND	-	ND
3&4-Methylphenol (m&p-cresol)	34000	330	-	ND	-	ND	-	ND	-	ND	-	ND	-	ND	-	ND
3,3'-Dichlorobenzidine	NS	NS	-	ND	-	ND	-	ND	-	ND	-	ND	-	ND	-	ND
3-Nitroaniline	NS	NS	-	ND	-	ND	-	ND	-	ND	-	ND	-	ND	-	ND
4,6-Dinitro-2-methylphenol	NS	NS	-	ND	-	ND	-	ND	-	ND	-	ND	-	ND	-	ND
4-Bromophenyl phenyl ether	NS	NS	-	ND	-	ND	-	ND	-	ND	-	ND	-	ND	-	ND
4-Chloro-3-methylphenol	NS	NS	-	ND	-	ND	-	ND	-	ND	-	ND	-	ND	-	ND
4-Chloroaniline	NS	NS	-	ND	-	ND	-	ND	-	ND	-	ND	-	ND	-	ND
4-Chlorophenyl phenyl ether	NS	NS	-	ND	-	ND	-	ND	-	ND	-	ND	-	ND	-	ND
4-Nitroaniline	NS	NS	-	ND	-	ND	-	ND	-	ND	-	ND	-	ND	-	ND
4-Nitrophenol	NS	NS	-	ND	-	ND	-	ND	-	ND	-	ND	-	ND	-	ND

Table 2
16EHAZ0063K Semi Volatile Organic Compounds by EPA Method 8260

526 Union Avenue, Brooklyn, NY
Creative Environment Solutions, Inc.

Compound	RRSCO*	UUSCO*	SB-4 (0'-2') 11/18/15	SB-4 (5'-7') 11/18/15	SB-5 (0'-2') 11/18/15	SB-5 (5'-7') 11/18/15	SB-6 (0'-2') 11/18/15	SB-6 (2'-4') 11/18/15	SB-6 (6'-8') 11/18/15
Semi-volatile Organic Compounds by 8270 - ug/kg									
Acenaphthene	100,000	20,000	- ND	- ND	- ND	- ND	820	- ND	- ND
Acenaphthylene	100,000	100,000	- ND	- ND	- ND	- ND	- ND	- ND	- ND
Acetophenone	NS	NS	- ND	- ND	- ND	- ND	- ND	- ND	- ND
Aniline	NS	NS	- ND	- ND	- ND	- ND	- ND	- ND	- ND
Anthracene	100,000	100,000	- ND	- ND	- ND	- ND	1300	- ND	- ND
Benz(a)anthracene	1,000	1,000	320	- ND	390	- ND	**1700**	- ND	- ND
Benzidine	NS	NS	- ND	- ND	- ND	- ND	- ND	- ND	- ND
Benzo(a)pyrene	1,000	1,000	360	- ND	470	- ND	**1400**	- ND	- ND
Benzo(b)fluoranthene	1,000	1,000	300	- ND	350	- ND	**1700**	- ND	- ND
Benzo(ghi)perylene	100000	100000	390	- ND	290	- ND	840	- ND	- ND
Benzo(k)fluoranthene	3,900	800	300	- ND	350	- ND	**1100**	- ND	- ND
Benzoic acid	NS	NS	- ND	- ND	- ND	- ND	- ND	- ND	- ND
Benzyl butyl phthalate	NS	NS	- ND	- ND	- ND	- ND	260	- ND	- ND
Bis(2-chloroethoxy)methane	NS	NS	- ND	- ND	- ND	- ND	- ND	- ND	- ND
Bis(2-chloroethyl)ether	NS	NS	- ND	- ND	- ND	- ND	- ND	- ND	- ND
Bis(2-chloroisopropyl)ether	NS	NS	- ND	- ND	- ND	- ND	- ND	- ND	- ND
Bis(2-ethylhexyl)phthalate	NS	NS	- ND	- ND	- ND	- ND	3200	- ND	- ND
Carbazole	NS	NS	- ND	- ND	- ND	- ND	- ND	- ND	- ND
Chrysene	3,900	1,000	370	- ND	580	- ND	**2300**	- ND	- ND
Dibenz(a,h)anthracene	330	330	- ND	- ND	- ND	- ND	- ND	- ND	- ND
Dibenzofuran	NS	NS	- ND	- ND	- ND	- ND	- ND	- ND	- ND
Diethyl phthalate	NS	NS	- ND	- ND	- ND	- ND	- ND	- ND	- ND
Dimethylphthalate	NS	NS	- ND	- ND	- ND	- ND	- ND	- ND	- ND
Di-n-butylphthalate	NS	NS	- ND	- ND	- ND	- ND	- ND	- ND	- ND
Di-n-octylphthalate	NS	NS	- ND	- ND	- ND	- ND	- ND	- ND	- ND
Fluoranthene	100000	100000	510	- ND	880	- ND	3700	- ND	- ND
Fluorene	100,000	30,000	- ND	- ND	- ND	- ND	1300	- ND	- ND
Hexachlorobenzene	NS	NS	- ND	- ND	- ND	- ND	- ND	- ND	- ND
Hexachlorobutadiene	NS	NS	- ND	- ND	- ND	- ND	- ND	- ND	- ND
Hexachlorocyclopentadiene	NS	NS	- ND	- ND	- ND	- ND	- ND	- ND	- ND
Hexachloroethane	NS	NS	- ND	- ND	- ND	- ND	- ND	- ND	- ND
Indeno(1,2,3-cd)pyrene	500	500	400	- ND	- ND	- ND	**870**	- ND	- ND
Isophorone	NS	NS	- ND	- ND	- ND	- ND	- ND	- ND	- ND
Naphthalene	100,000	12,000	- ND	- ND	- ND	- ND	360	- ND	- ND
Nitrobenzene	NS	NS	- ND	- ND	- ND	- ND	- ND	- ND	- ND
N-Nitrosodimethylamine	NS	NS	- ND	- ND	- ND	- ND	- ND	- ND	- ND
N-Nitrosodi-n-propylamine	NS	NS	- ND	- ND	- ND	- ND	- ND	- ND	- ND
N-Nitrosodiphenylamine	NS	NS	- ND	- ND	- ND	- ND	- ND	- ND	- ND
Pentachloronitrobenzene	NS	NS	- ND	- ND	- ND	- ND	- ND	- ND	- ND
Pentachlorophenol	NS	NS	- ND	- ND	- ND	- ND	- ND	- ND	- ND
Phenanthrene	100,000	100,000	480	- ND	840	- ND	3200	- ND	- ND
Phenol	100,000	330	- ND	- ND	- ND	- ND	- ND	- ND	- ND
Pyrene	100,000	100,000	510	- ND	760	- ND	4800	- ND	- ND
Pyridine	NS	NS	- ND	- ND	- ND	- ND	- ND	- ND	- ND

(1) NYSDEC 6 NYCRR Environmental Remediation Programs Part 375 Unrestriced Use of Soil Cleanup Objective Table 375-6.8a 12/06

Notes:
(1) NYSDEC 6 NYCRR Environmental Remediation Programs Part 375 Unrestriced Use of Soil Cleanup Objective Table 375-6.8a 12/06
NS - No standard
ND - Not detected above detection limit
Bold/highlighted - indicated exceedance of the Unrestricted Use Soil Cleanup Objectives
Bold/highlighted - indicated exceedance of the Restricted Use Residential Soil Cleanup Objectives
*-Sum of all isomers
B - Compound detected in the laboratory blank
J - Estimated concentration

Table 3
16EHAZ0063K
Soil Analytical Results for Metals

526 Union Avenue, Brooklyn, NY
Creative Environment Solutions, Inc.

Compound	RRSCO	UUSCO	SB-1 (0'-2') 11/18/15	SB-1 (5'-7') 11/18/15	SB-2 (0'-2') 11/18/15	SB-2 (5'-7') 11/18/15	SB-3 (0'-5') 11/18/15	SB-3 (7'-8') 11/18/15	SB-4 (0'-2') 11/18/15	SB-4 (5'-7') 11/18/15	SB-5 (0'-2') 11/18/15	SB-5 (5'-7') 11/18/15	SB-6 (0'-2') 11/18/15	SB-6 (2'-4') 11/18/15	SB-6 (6'-8') 11/18/15
Metals - mg/kg															
Aluminum	NS	NS	5000	7140	10200	10300	7570	9790	5000	8650	3670	10200	5760	6590	8960
Antimony	NS	NS	43	- ND	35.4	- ND	- ND	- ND	- ND	- ND	- ND	- ND	45	81	- ND
Arsenic	16	13	40.3	7.9	7.5	2.5	11.6	4.1	25.8	2.7	10.3	2.1	23.9	2.6	6.3
Barium	400	350	1940	414	1810	70.6	128	102	121	87.4	230	58.1	661	67.5	82.6
Beryllium	72	7.2	0.34	0.4	0.51	0.47	0.42	0.53	0.39	0.55	- ND	0.45	0.28	0.51	0.46
Cadmium	4.3	2.5	28	3.18	2.6	- ND	2.77	- ND	2.29	- ND	14.2	1.17	18.1	0.66	0.73
Calcium	NS	NS	18900	6410	11000	1170	26800	6160	1550	1710	96900	1230	13900	1240	9170
Chromium	110	30	224	85.2	28.1	24.6	67.9	26.8	45.5	20.3	23.3	23.1	112	26.3	23.1
Cobalt	NS	NS	23.4	4.76	12.4	7.56	10.2	7.84	13	8.27	6.61	7.9	14.1	7.99	9.89
Copper	270	50	1160	31.5	131	60	93.1	29.4	135	30.2	143	37.5	1140	135	40.6
Iron	NS	NS	152000	13400	36700	27900	25100	18500	76300	22400	29500	21400	43800	22300	36100
Lead	400	63	4880	1330	5540	120	317	90.1	340	59.6	986	71	1930	200	152
Magnesium	NS	NS	5490	2150	5090	1910	9060	3370	1260	1890	44500	2130	6060	1700	2120
Manganese	2,000	1,600	969	186	390	410	407	294	1020	450	315	366	458	203	771
Mercury	0.81	0.18	5.66	0.46	0.41	12.8	1.07	0.66	0.89	0.16	0.99	0.61	7.21	0.47	0.85
Nickel	310	30	253	16.6	23.1	12.6	28.5	15	24.9	12.9	20.4	24	128	19.6	18.6
Potassium	NS	NS	544	842	2490	1100	1350	1170	983	1180	893	1600	1660	868	1410
Selenium	180	3.9	- ND	- ND	- ND	- ND	- ND	- ND	- ND	- ND	- ND	- ND	- ND	- ND	- ND
Silver	180	2	3.98	- ND	- ND	- ND	- ND	- ND	- ND	- ND	1.27	- ND	6.69	4.18	- ND
Sodium	NS	NS	827	164	3280	76.9	201	199	122	129	278	92.3	701	90.4	107
Thallium	NS	NS	- ND	- ND	- ND	- ND	- ND	- ND	- ND	- ND	- ND	- ND	- ND	- ND	- ND
Vanadium	NS	NS	60.7	22	35.3	39.8	35.3	34.3	35.5	38.1	46	32.7	31.4	29	31.3
Zinc	10,000	109	5710	787	2940	90.6	755	60	759	49	874	487	2410	340	219

Notes:

(1) NYSDEC 6 NYCRR Environmental Remediation Programs Part 375 Unrestriced Use of Soil Cleanup Objective Table 375-6.8a 12/06
NS - No standard
ND - Not detected above detection limit
Bold/highlighted - indicated exceedance of the Unrestricted Use Soil Cleanup Objectives
Bold/highlighted - indicated exceedance of the Restricted Use Residential Soil Cleanup Objectives

Table 4
16EHAZ0063K
Soil Analytical Results for PCBs
526 Union Avenue, Brooklyn, NY
Creative Environment Solutions, Inc.

Compound	RRSCO	UUSCO	SB-1 (0'-2') 11/18/15	SB-1 (5'-7') 11/18/15	SB-2 (0'-2') 11/18/15	SB-2 (5'-7') 11/18/15	SB-3 (0'-5') 11/18/15	SB-3 (7'-8') 11/18/15	SB-4 (0'-2') 11/18/15	SB-4 (5'-7') 11/18/15	SB-5 (0'-2') 11/18/15	SB-5 (5'-7') 11/18/15	SB-6 (0'-2') 11/18/15	SB-6 (2'-4') 11/18/15	SB-6 (6'-8') 11/18/15
PCBs - ug/kg															
PCB 1016			- ND	- ND	- ND	- ND	- ND	- ND	- ND	- ND	- ND	- ND	- ND	- ND	- ND
PCB 1221			- ND	- ND	- ND	- ND	- ND	- ND	- ND	- ND	- ND	- ND	- ND	- ND	- ND
PCB 1232			- ND	- ND	- ND	- ND	- ND	- ND	- ND	- ND	- ND	- ND	- ND	- ND	- ND
PCB 1242			- -	- ND	- -	- ND	- ND	- ND	- ND	- ND	- ND	- ND	- ND	- ND	- ND
PCB 1248				- ND		- ND	- ND	- ND	- ND	- ND	- ND	- ND		- ND	- ND
PCB 1254				- ND		- ND	170	- ND	- ND	- ND	- ND	- ND		- ND	- ND
PCB 1260				- ND		- ND	- ND	- ND	- ND	- ND	- ND	- ND		- ND	- ND
PCB 1262			- ND	- ND	- ND	- ND	- ND	- ND	- ND	- ND	- ND	- ND	- ND	- ND	- ND
PCB 1268			- ND	- ND	- ND	- ND	- ND	- ND	- ND	- ND	- ND	- ND	- ND	- ND	- ND
Total PCBs	1,000	100					170								
Pestiides - mg/kg															
4,4' -DDD	13	0.0033	- ND	- ND	- ND	- ND	- ND	- ND	- ND	- ND	- ND	- ND	0.04 -	- ND	- ND
4,4' -DDE	8.9	0.0033	- ND	- ND	- ND	- ND	- ND	- ND	- ND	- ND	- ND	- ND	- ND	- ND	- ND
4,4' -DDT	7.9	0.0033	- ND	- ND	- ND	- ND	- ND	- ND	- ND	- ND	- ND	- ND	0.06	- ND	- ND
a-BHC	0.48	0.02	- ND	- ND	- ND	- ND	- ND	- ND	- ND	- ND	- ND	- ND	- ND	- ND	- ND
a-Chlordane	4.2	0.094	- ND	- ND	- ND	- ND	- ND	- ND	- ND	- ND	- ND	- ND	- ND	- ND	- ND
Aldrin	0.097	0.005	- ND	- ND	- ND	- ND	- ND	- ND	- ND	- ND	- ND	- ND	- ND	- ND	- ND
b-BHC	0.36	0.036	- ND	- ND	- ND	- ND	- ND	- ND	- ND	- ND	- ND	- ND	- ND	- ND	- ND
Chlordane			- ND	- ND	- ND	- ND	- ND	- ND	- ND	- ND	- ND	- ND	- ND	- ND	- ND
d-BHC	100	0.04	- ND	- ND	- ND	- ND	- ND	- ND	- ND	- ND	- ND	- ND	- ND	- ND	- ND
Dieldrin	0.2	0.005	- ND	- ND	- ND	- ND	- ND	- ND	- ND	- ND	- ND	- ND	- ND	- ND	- ND
Endosulfan I	24	2.4	- ND	- ND	- ND	- ND	- ND	- ND	- ND	- ND	- ND	- ND	- ND	- ND	- ND
Endosulfan II	24	2.4	- ND	- ND	- ND	- ND	- ND	- ND	- ND	- ND	- ND	- ND	- ND	- ND	- ND
Endosulfan sulfate	24	2.4	- ND	- ND	- ND	- ND	- ND	- ND	- ND	- ND	- ND	- ND	- ND	- ND	- ND
Endrin	11	0.014	- ND	- ND	- ND	- ND	- ND	- ND	- ND	- ND	- ND	- ND	- ND	- ND	- ND
Endrin aldehyde			- ND	- ND	- ND	- ND	- ND	- ND	- ND	- ND	- ND	- ND	- ND	- ND	- ND
Endrin ketone			- ND	- ND	- ND	- ND	- ND	- ND	- ND	- ND	- ND	- ND	- ND	- ND	- ND
g-BHC			- ND	- ND	- ND	- ND	- ND	- ND	- ND	- ND	- ND	- ND	- ND	- ND	- ND
g-Chlordane			- ND	- ND	- ND	- ND	- ND	- ND	- ND	- ND	- ND	- ND	- ND	- ND	- ND
Heptachlor	2.1	0.042	- ND	- ND	- ND	- ND	- ND	- ND	- ND	- ND	- ND	- ND	- ND	- ND	- ND
Heptachlor epoxide			- ND	- ND	- ND	- ND	- ND	- ND	- ND	- ND	- ND	- ND	- ND	- ND	- ND
Methoxychlor			- ND	- ND	- ND	- ND	- ND	- ND	- ND	- ND	- ND	- ND	- ND	- ND	- ND
Toxaphene			- ND	- ND	- ND	- ND	- ND	- ND	- ND	- ND	- ND	- ND	- ND	- ND	- ND

Notes:
(1) NYSDEC 6 NYCRR Environmental Remediation Programs Part 375 Unrestriced Use of Soil Cleanup Objective Table 375-6.8a 12/06
NS - No standard
ND - Not detected above detection limit
Bold/highlighted - indicated exceedance of the Unrestricted Use Soil Cleanup Objectives
Bold/highlighted - indicated exceedance of the Restricted Use Residential Soil Cleanup Objectives
Diluted samples. Estimated concentration consistent with previous detections.

Table 5
526 Union Avenue, Brooklyn, NY
EHAZ0063K
Groundwater Analytical Results
Volatile Organic Compounds (VOCs)

Client Sample ID#:		SB-1/MW-1		SB-2/MW		SB-6/MW	
Date of Collection:	NYSDEC	11/25/15		11/25/15		11/25/15	
Laboratory ID#:	Groundwater Standards**						
VOCs by 8260 - ug/L		ug/L	Note	ug/L	Note	ug/L	Note
1,1,1,2-Tetrachloroethane	5	ND	-	ND	-	ND	-
1,1,1-Trichloroethane	5	ND	-	ND	-	ND	-
1,1,2,2-Tetrachloroethane	5	ND	-	ND	-	ND	-
1,1,2-Trichloroethane	1	ND	-	ND	-	ND	-
1,1-Dichloroethane	5	ND	-	ND	-	ND	-
1,1-Dichloroethene	5	ND	-	ND	-	ND	-
1,1-Dichloropropene	5	ND	-	ND	-	ND	-
1,2,3-Trichlorobenzene	5	ND	-	ND	-	ND	-
1,2,3-Trichloropropane	0.04	ND	-	ND	-	ND	-
1,2,4-Trichlorobenzene	5	ND	-	ND	-	ND	-
1,2,4-Trimethylbenzene	5	ND	-	ND	-	ND	-
1,2-Dibromo-3-chloropropane	0.04	ND	-	ND	-	ND	-
1,2-Dibromoethane	0.0006	ND	-	ND	-	ND	-
1,2-Dichlorobenzene	5	ND	-	ND	-	ND	-
1,2-Dichloroethane	0.6	ND	-	ND	-	ND	-
1,2-Dichloropropane	1	ND	-	ND	-	ND	-
1,3,5-Trimethylbenzene	5	ND	-	ND	-	ND	-
1,3-Dichlorobenzene	3	ND	-	ND	-	ND	-
1,3-Dichloropropane	5	ND	-	ND	-	ND	-
1,4-Dichlorobenzene	3	ND	-	ND	-	ND	-
2,2-Dichloropropane	5	ND	-	ND	-	ND	-
2-Chlorotoluene	5	ND	-	ND	-	ND	-
2-Hexanone	50	ND	-	ND	-	ND	-
2-Isopropyltoluene	5	ND	-	ND	-	ND	-
4-Chlorotoluene	5	ND	-	ND	-	ND	-
4-Methyl-2-pentanone	NS	ND	-	ND	-	ND	-
Acetone	50	ND	-	ND	-	ND	-
Acrylonitrile	5	ND	-	ND	-	ND	-
Benzene	1	ND	-	ND	-	ND	-
Bromobenzene	5	ND	-	ND	-	ND	-
Bromochloromethane	5	ND	-	ND	-	ND	-
Bromodichloromethane	50	ND	-	ND	-	ND	-
Bromoform	50	ND	-	ND	-	ND	-
Bromomethane	5	ND	-	ND	-	ND	-
Carbon Disulfide	NS	ND	-	ND	-	ND	-
Carbon tetrachloride	5	ND	-	ND	-	ND	-
Chlorobenzene	5	ND	-	ND	-	ND	-
Chloroethane	5	ND	-	ND	-	ND	-
Chloroform	7	ND	-	ND	-	ND	-
Chloromethane	5	ND	-	ND	-	ND	-
cis-1,2-Dichloroethene	5	ND	-	ND	-	ND	-
cis-1,3-Dichloropropene	0.4	ND	-	ND	-	ND	-
Dibromochloromethane	50	ND	-	ND	-	ND	-
Dibromomethane	5	ND	-	ND	-	ND	-
Dichlorodifluoromethane	5	ND	-	ND	-	ND	-
Ethylbenzene	5	ND	-	ND	-	ND	-
Hexachlorobutadiene	0.5	ND	-	ND	-	ND	-
Isopropylbenzene	5	ND	-	ND	-	ND	-
m&p-Xylene	5	ND	-	ND	-	ND	-
Methyl ethyl ketone	50	ND	-	ND	-	ND	-
Methyl t-butyl ether (MTBE)	10	ND	-	ND	-	2.8	-
Methylene chloride	5	ND	-	ND	-	ND	-
Naphthalene	10	ND	-	ND	-	ND	-
n-Butylbenzene	5	ND	-	ND	-	ND	-
n-Propylbenzene	5	ND	-	ND	-	ND	-
o-Xylene	5	ND	-	ND	-	ND	-
p-Isopropyltoluene	5	ND	-	ND	-	ND	-
sec-Butylbenzene	5	ND	-	ND	-	ND	-
Styrene	5	ND	-	ND	-	ND	-
tert-Butylbenzene	5	ND	-	ND	-	ND	-
Tetrachloroethene	5	ND	-	ND	-	ND	-
Tetrahydrofuran (THF)	50	ND	-	ND	-	ND	-
Toluene	5	ND	-	ND	-	3.2	-
Total Xylenes	5	ND	-	ND	-	ND	-
trans-1,2-Dichloroethene	5	ND	-	ND	-	ND	-
trans-1,3-Dichloropropene	0.4	ND	-	ND	-	ND	-
trans-1,4-dichloro-2-butene	5	ND	-	ND	-	ND	-
Trichloroethene	5	ND	-	ND	-	ND	-
Trichlorofluoromethane	5	ND	-	ND	-	ND	-
Trichlorotrifluoroethane	5	ND	-	ND	-	ND	-
Vinyl chloride	2	ND	-	ND	-	ND	-
			-		-		-

Notes:
** - NYSDEC Ambient Water Quality Standards and Guidance Values 6/1998
*** - NYSDEC Ambient Water Quality Standards and Guidance Values, Addendum April 2000
ND - Compound was analyzed but not detected.
J - Analyte detected below quantitation limits
B - Analyte detected in the associated Method Blank
Bold/highlighted- Indicated exceedance of the NYSDEC Groundwater Standard

Table 6
526 Union Avenue, Brooklyn, NY
EHAZ0063K
Groundwater Analytical Results
Semi - Volatile Organic Compounds (SVOCs)

	NYSDEC Class GA Groundwater Standards**	SB-1/MW 11/25/15		SB-2/W 11/25/15		SB-6/W 11/25/15	
SVOCs by 8270 - ug/L							
1,2,4-Trichlorobenzene	5	ND		ND		ND	
1,2-Dichlorobenzene	5	ND		ND		ND	
1,2-Diphenylhydrazine	ND	ND		ND		ND	
1,3-Dichlorobenzene	3	ND		ND		ND	
1,4-Dichlorobenzene	5	ND		ND		ND	
2,4,5-Trichlorophenol	1	ND		ND		ND	
2,4,6-Trichlorophenol	1	ND		ND		ND	
2,4-Dichlorophenol	5	ND		ND		ND	
2,4-Dimethylphenol	1	ND		ND		ND	
2,4-Dinitrophenol	5	ND		ND		ND	
2,4-Dinitrotoluene	5	ND		ND		ND	
2,6-Dinitrotoluene	5	ND		ND		ND	
2-Chloronaphthalene	10	ND		ND		ND	
2-Chlorophenol	1	ND		ND		ND	
2-Methylphenol (o-cresol)	1	ND		ND		ND	
2-Nitroaniline	5	ND		ND		ND	
2-Nitrophenol	1	ND		ND		ND	
3&4-Methylphenol (m&p-cresol)	NS	ND		ND		ND	
3,3'-Dichlorobenzidine	5	ND		ND		ND	
3-Nitroaniline	5	ND		ND		ND	
4,6-Dinitro-2-methylphenol	1	ND		ND		ND	
4-Bromophenyl phenyl ether	NS	ND		ND		ND	
4-Chloro-3-methylphenol	1	ND		ND		ND	
4-Chloroaniline	5	ND		ND		ND	
4-Chlorophenyl phenyl ether	NS	ND		ND		ND	
4-Nitroaniline	5	ND		ND		ND	
4-Nitrophenol	1	ND		ND		ND	
Acetophenone	NS	ND		ND		ND	
Aniline	5	ND		ND		ND	
Benzidine	5	ND		ND		ND	
Benzoic acid	NS	ND		ND		ND	
Benzyl butyl phthalate	50	ND		ND		ND	
Bis(2-chloroethoxy)methane	5	ND		ND		ND	
Bis(2-chloroethyl)ether	1	ND		ND		ND	
Bis(2-chloroisopropyl)ether	NS	ND		ND		ND	
Carbazole	NS	ND		ND		ND	
Dibenzofuran	NS	ND		ND		ND	
Diethyl phthalate	50	ND		ND		ND	
Dimethylphthalate	50	ND		ND		ND	
Di-n-butylphthalate	50	ND		ND		ND	
Di-n-octylphthalate	50	ND		ND		ND	
Hexachlorocyclopentadiene	5	ND		ND		ND	
Isophorone	50	ND		ND		ND	
N-Nitrosodimethylamine	NS	ND		ND		ND	
N-Nitrosodi-n-propylamine	NS	ND		ND		ND	
N-Nitrosodiphenylamine	50	ND		ND		ND	
Phenol	1	ND		ND		ND	
1,2,4,5-Tetrachlorobenzene	5	ND		ND		ND	
2-Methylnaphthalene	NS	ND		ND		ND	
Acenaphthene	20	0.8		ND		0.1	
Acenaphthylene	NS	0.13		ND		ND	
Anthracene	50	0.36		0.03		0.07	
Benz(a)anthracene	0.002	0.4		ND		0.09	
Benzo(a)pyrene	ND	0.35		ND		0.08	
Benzo(b)fluoranthene	0.002	0.32		ND		0.06	
Benzo(ghi)perylene	NS	ND		ND		ND	
Benzo(k)fluoranthene	0.002	0.27		ND		0.06	
Bis(2-ethylhexyl)phthalate	5	ND		ND		ND	
Chrysene	0.002	0.38		ND		0.08	
Dibenz(a,h)anthracene	NS	0.06		ND		ND	
Fluoranthene	50	1.2		ND		0.21	
Fluorene	50	0.73		ND		ND	
Hexachlorobenzene	0.04	ND		ND		ND	
Hexachlorobutadiene	0.5	ND		ND		ND	
Hexachloroethane	5	ND		ND		ND	
Indeno(1,2,3-cd)pyrene	0.002	0.16		ND		0.04	
Naphthalene	10	1.1		ND		ND	
Nitrobenzene	0.4	ND		ND		ND	
Pentachloronitrobenzene	ND	ND		ND		ND	
Pentachlorophenol	1	ND		ND		ND	
Phenanthrene	50	1.6		ND		0.18	
Pyrene	50	0.97		ND		0.18	
Pyridine	50	ND		ND		ND	

Notes:
** - NYSDEC Ambient Water Quality Standards and Guidance Values 6/1998
ND - Non-detect
* - Guidance Value
NS - No Standard
Bold/highlighted- Indicated exceedance of the NYSDEC Groundwater Standard
(1) Applies to each isomer (1,2 - 1,3 and 1,4) individually

Table 7
526 Union Avenue, Brooklyn, NY
EHAZ0063K
Groundwater Analytical Results
Metals

	NYSDEC Groundwater Standards**	SB-1/MW 11/25/15	SB-2/MW 11/25/15	SB-6/MW 11/25/15
Metals - mg/L				
Aluminum	0.1	27.2	1.58	13.8
Aluminum (Dissolved)	0.1	0.132	0.153	0.187
Antimony	0.003	ND	ND	ND
Antimony (Dissolved)	0.003	ND	ND	ND
Arsenic	0.025	ND	ND	0.011
Arsenic (Dissolved)	0.025	ND	ND	ND
Barium	1	0.31	0.16	0.282
Barium (Dissolved)	1	0.097	0.096	0.108
Beryllium	0.003	ND	ND	ND
Beryllium (Dissolved)	0.003	ND	ND	ND
Cadmium	0.005	ND	ND	0.002
Cadmium (Dissolved)	0.005	ND	ND	ND
Calcium	NS	89.1	109	130
Calcium (Dissolved)	NS	110	108	126
Chromium	0.05	0.045	0.003	0.031
Chromium (Dissolved)	0.05	ND	ND	ND
Cobalt	NS	0.018	ND	0.012
Cobalt (Dissolved)	NS	ND	ND	0.003
Copper	0.2	0.065	ND	0.068
Copper (Dissolved)	0.2	ND	ND	ND
Iron	0.3	36.9	9.4	25.3
Iron (Dissolved)	0.3	0.263	1.28	0.051
Lead	0.025	0.187	0.011	0.187
Lead (Dissolved)	0.025	ND	ND	ND
Magnesium	35	12.2	16.1	26.9
Magnesium (Dissolved)	35	15.5	15.5	23.6
Manganese	0.3	1.15	2.17	0.917
Manganese (Dissolved)	0.3	2.01	1.98	0.605
Mercury	0.0007	ND	ND	ND
Mercury (Dissolved)	0.0007	ND	ND	ND
Nickel	0.1	0.035	0.003	0.038
Nickel (Dissolved)	0.1	ND	ND	0.013
Potassium	NS	16.4	19.1	17.1
Potassium (Dissolved)	NS	18.3	17.9	14.7
Selenium	0.01	ND	ND	ND
Selenium (Dissolved)	0.01	ND	ND	0.003
Silver	0.05	ND	ND	ND
Silver (Dissolved)	0.05	ND	ND	ND
Sodium	20	25.6	23.8	33.9
Sodium (Dissolved)	20	22.8	22.8	32.2
Thallium	0.0005	ND	ND	ND
Thallium (Dissolved)	0.0005	ND	ND	ND
Vanadium	NS	0.061	0.003	0.035
Vanadium (Dissolved)	NS	ND	ND	ND
Zinc	5	0.149	0.009	0.361
Zinc (Dissolved)	5	0.002	0.002	0.117
PCBs - mg/L				
PCB-1016	0.09	ND	ND	ND
PCB-1221	0.09	ND	ND	ND
PCB-1232	0.09	ND	ND	ND
PCB-1242	0.09	ND	ND	ND
PCB-1248	0.09	ND	ND	ND
PCB-1254	0.09	ND	ND	ND
PCB-1260	0.09	ND	ND	ND
PCB-1262	0.09	ND	ND	ND
PCB-1268	0.09	ND	ND	ND

Notes:
** - NYSDEC Ambient Water Quality Standards and Guidance Values 6/1998
ND - Non-detect
* - Guidance Value
NS - No Standard
Bold/highlighted- Indicated exceedance of the NYSDEC Groundwater Standard

Table 8
526 Union Avenue, Brooklyn, NY
EHAZ0063K
Groundwater Analytical Results

		SB-1/MW		SB-2/W		SB-6/W	
	NYSDEC Class GA	11/25/15		11/25/15		11/25/15	
	Groundwater Standards**						
Pesticides - ug/L							
4,4' -DDD	0.3	ND		ND		ND	
4,4' -DDE	0.2	ND		ND		ND	
4,4' -DDT	0.2	ND		ND		ND	
a-BHC	0.01	ND		ND		ND	
Alachlor	0.5	ND		ND		ND	
Aldrin	ND	ND		ND		ND	
b-BHC	0.04	ND		ND		ND	
Chlordane	0.05	ND		ND		ND	
d-BHC	0.04	ND		ND		ND	
Dieldrin	ND	ND		ND		ND	
Endosulfan I	NS	ND		ND		ND	
Endosulfan II	NS	ND		ND		ND	
Endosulfan Sulfate	NS	ND		ND		ND	
Endrin	ND	ND		ND		ND	
Endrin Aldehyde	5	ND		ND		ND	
Endrin ketone	5	ND		ND		ND	
g-BHC (Lindane)	0.05	ND		ND		ND	
Heptachlor	0.04	ND		ND		ND	
Heptachlor epoxide	0.03	ND		ND		ND	
Methoxychlor	35	ND		ND		ND	
Toxaphene	0.06	ND		ND		ND	

Notes:
** - NYSDEC Ambient Water Quality Standards and Guidance Values 6/1998
ND - Non-detect
* - Guidance Value
NS - No Standard
Bold/highlighted- Indicated exceedance of the NYSDEC Groundwater Standard
(1) Applies to each isomer (1,2 - 1,3 and 1,4) individually

APPENDIX A

REDEVELOPMENT PLANS

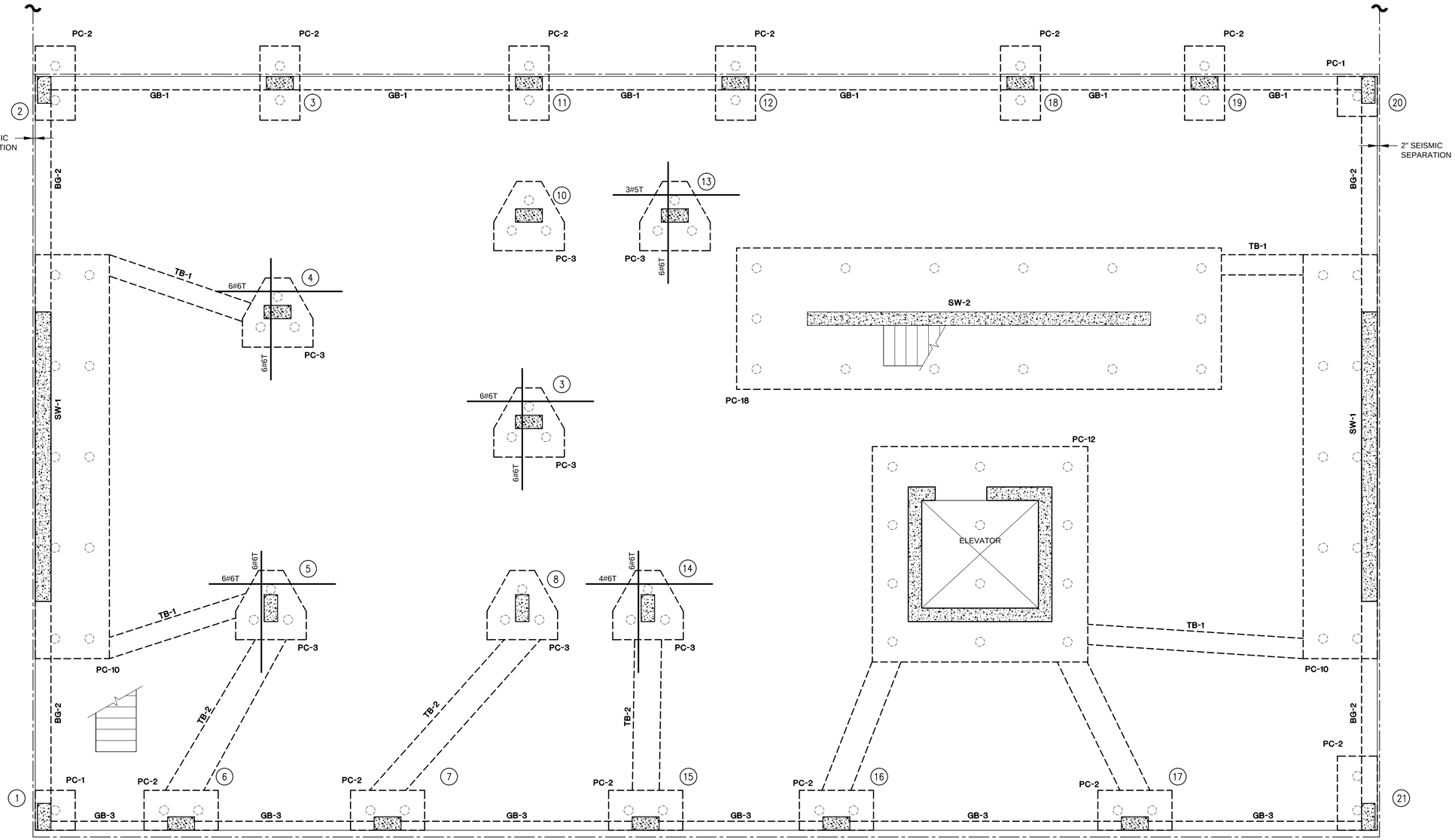

FOUNDATION PLAN

SCALE: 1/4" = 1'-0"

NOTES:

1. SLAB ON GRADE SHALL BE @ ELEV. 0'-0" UNLESS OTHERWISE NOTED.
2. SLAB ON GRADE SHALL BE 8" THICK AND SHALL BE REINF. WITH #4@12" T&B. ADD 3#5T E.W. AT PILE CAPS EXCEPT WHEN OTHERWISE SHOWN ON PLAN.
3. FOR TYPICAL FOUNDATION DETAILS AND FOUNDATIONS AND DETAILS SEE SERIES 200 DRAWINGS.
4. FOR SHEAR WALLS SEE SERIES 300 DRAWINGS.
5. FOR TYPICAL SUPERSTRUCTURE DETAILS SEE SERIES 400 DRAWINGS.
6. TOP OF PILE CAPS SHALL BE AT 1'-0" BELOW TOP OF SLAB EXCEPT AT LOCATIONS WHERE GRADE BEAMS FRAME INTO COLUMNS WHERE TOP OF PILE CAP SHALL BE AT -3'-0" FROM TOP OF SLAB AND AS OTHERWISE NOTED ON PLAN THUS (-....) FROM TOP OF SLAB.

GRADE BEAM AND TIE BEAM SCHEDULE

MARK	SIZES		REINFORCEMENT				REMARKS
	WIDTH	DEPTH	BOTTOM CONT.	TOP CONT.	STIRRUPS SIZE	STIRRUPS SPACING	
TB-1							
TB-2							
GB-1							
GB-2							
GB-3							

STRUCTURAL ENGINEERING TECHNOLOGIES, P.C.

CONSULTING STRUCTURAL AND FOUNDATION ENGINEERS

40-12 28TH STREET
LONG ISLAND CITY, NY 11101
T(718)706-7196 F(718)472-4464

ALL RIGHTS RESERVED

ALL DRAWINGS SPECIFICATIONS AND COPIES THEREOF FURNISHED BY S.E.T., P.C. ARE AND WILL REMAIN THEIR PROPERTY. THEY ARE NOT TO BE USED ON THIS OR ANY OTHER PROJECT UNLESS WRITTEN PERMISSION IS GIVEN.

OWNER:

NOTE:
STRUCTURAL ENGINEERING TECHNOLOGIES, P.C. HAS NOT BEEN RETAINED TO PERFORM CONTROLLED INSPECTIONS OF ANY KIND FOR THIS PROJECT.

NO.	DATE:	DESCRIPTION

REVISONS:

FILINGS:

PROJECT

526 UNION AVENUE
BROOKLYN, N.Y. 11211

FACADE RENOVATION AND BROWNSTONE REPAIR

DRAWING TITLE:

CELLAR/FOUNDATION FRAMING PLAN

SEAL & SIGNATURE

STATE OF NEW YORK · GEORGE J. CAMBIONI · No. 060244 · LICENSED PROFESSIONAL ENGINEER

DATE:	09-23-14
PROJECT NO:	
SCALE:	AS NOTED
DRAWING BY:	M.M.
CHECKED BY:	G.J.C.
DWG NO:	FO-100.00
SHEET NO:	OF

BSCAN STICKER

DOB APPROVAL STAMP

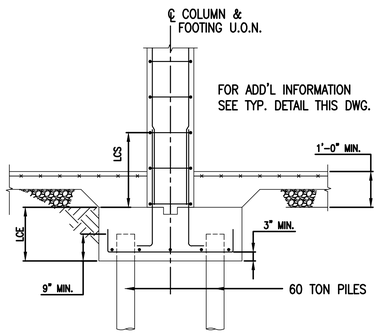

01 SCALE: NTS — TYPICAL PILE CAP DETAIL

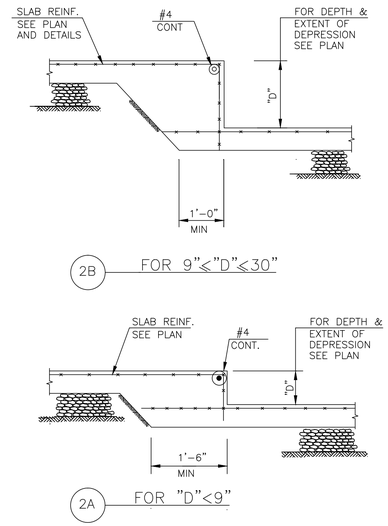

02 SCALE: NTS — TYPICAL DETAILS OF DEPRESSION IN SLAB-ON-GRADE

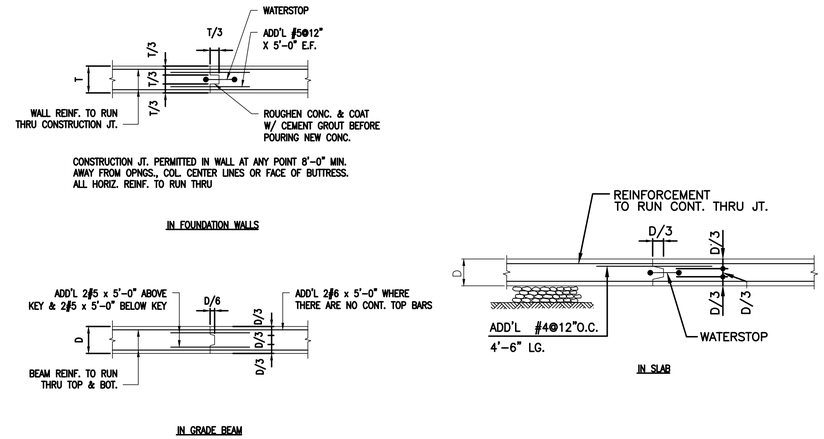

03 SCALE: NTS — TYPICAL CONSTRUCTION JOINT DETAILS

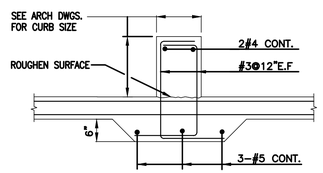

04 SCALE: NTS — TYPICAL DETAIL AT CURB ON - ON - GRADE

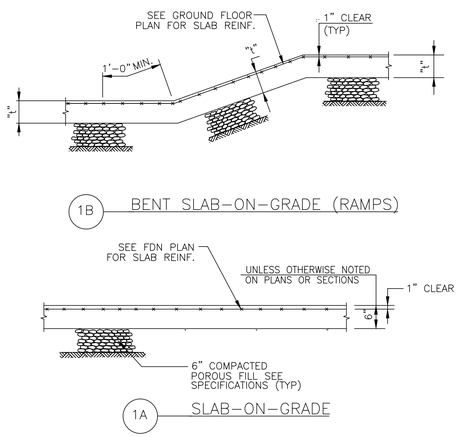

05 SCALE: NTS — TYPICAL SLAB-ON-GRADE

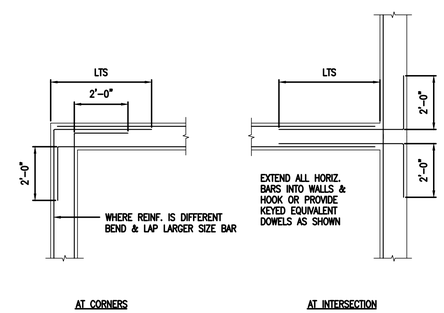

06 SCALE: NTS — HORIZONTAL WALL REINFORCEMENT DETAIL

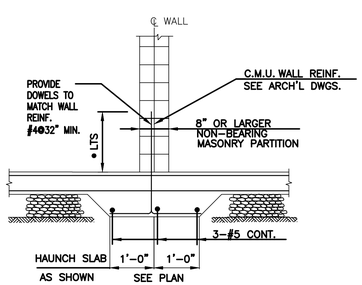

NOTE: USE SIMILAR DETAIL AT STAIRS

07 SCALE: NTS — MASONRY PARTITION BEARING ON SLAB-ON-GRADE

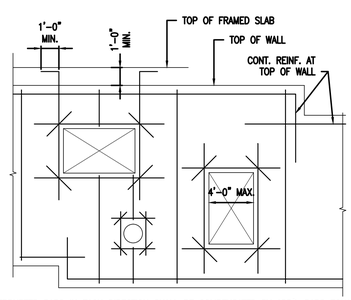

NOTES:
1. ALL INTERRUPTED BARS IN EACH DIRECTION SHALL BE COMPENSATED BY ADD'L BARS EQUAL TO 1/2 THE INTERRUPTED AREA, (OR 2#7 MIN.) AT EACH SIDE OF OPENING.
2. ALL ADD'L CORNER BARS AT OPNGS. ARE 2#3 x 4'-0" (EACH FACE).
3. FOR LENGTH OF SPLICES SEE SCHEDULE OF EMBEDMENT AND SPLICE LENGHTS THIS DWG.
4. WHERE FDN. WALL OPENINGS ARE WIDER THAN 4'-0" CONTRACTOR SHALL SUBMIT LOCATIONS & DIMENSIONS TO ENGINEER FOR REDESIGN.

08 SCALE: NTS — TYPICAL DETAIL OF ADD'L REINFORCEMENT AT CONC. FOUNDATION WALL OPENINGS AND OF SETPS IN TOP & BOTTOM OF FOUNDATION WALL

STRUCTURAL ENGINEERING TECHNOLOGIES, P.C.

CONSULTING STRUCTURAL AND FOUNDATION ENGINEERS

40-12 28TH STREET
LONG ISLAND CITY, NY 11101
T(718)706-7196 F(718)472-4464

ALL RIGHTS RESERVED
ALL DRAWINGS SPECIFICATIONS AND COPIES THEREOF FURNISHED BY S.E.T., P.C. ARE AND WILL REMAIN THEIR PROPERTY. THEY ARE NOT TO BE USED ON THIS OR ANY OTHER PROJECT UNLESS WRITTEN PERMISSION IS GIVEN.

OWNER:

NOTE:
STRUCTURAL ENGINEERING TECHNOLOGIES, P.C. HAS NOT BEEN RETAINED TO PERFORM CONTROLLED INSPECTIONS OF ANY KIND FOR THIS PROJECT.

NO.	DATE:	DESCRIPTION

REVISONS:

FILINGS:

PROJECT

526 UNION AVENUE
BROOKLYN, N.Y. 11211

FACADE RENOVATION AND BROWNSTONE REPAIR

DRAWING TITLE:

TYPICAL FOUNDATION DETAILS

SEAL & SIGNATURE

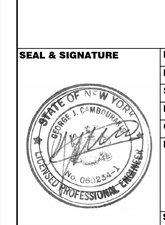

DATE:	09-23-14
PROJECT NO:	
SCALE:	AS NOTED
DRAWING BY:	M.M.
CHECKED BY:	G.J.C.
DWG NO:	FO-201.00
SHEET NO:	OF

BSCAN STICKER

DOB APPROVAL STAMP

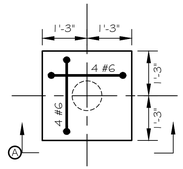

PILE CAP- PC1
SCALE: 1/2" = 1'-0"

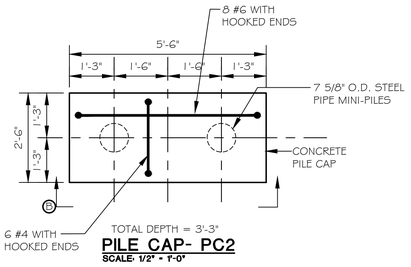

PILE CAP- PC2
SCALE: 1/2" = 1'-0"

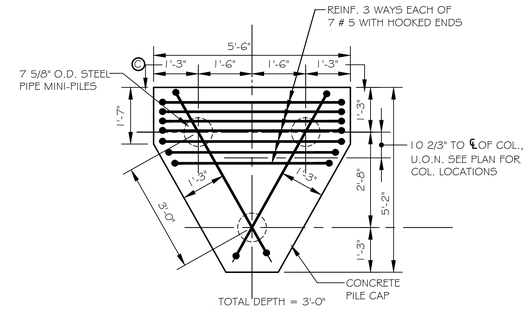

PILE CAP- PC3
SCALE: 1/2" = 1'-0"

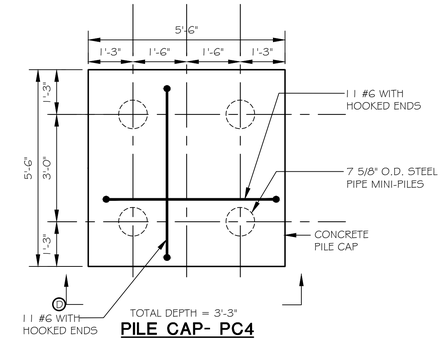

PILE CAP- PC4
SCALE: 1/2" = 1'-0"

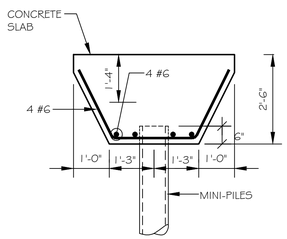

SECTION Ⓐ
SCALE: 1/2" = 1'-0"

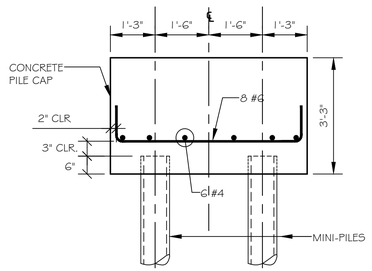

SECTION Ⓑ
SCALE: 1/2" = 1'-0"

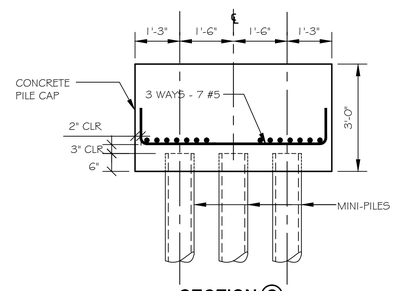

SECTION Ⓒ
SCALE: 1/2" = 1'-0"

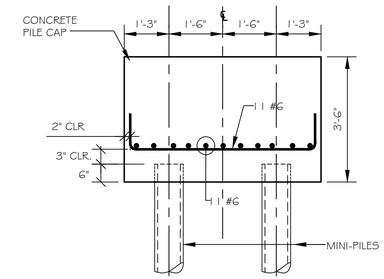

SECTION Ⓓ
SCALE: 1/2" = 1'-0"

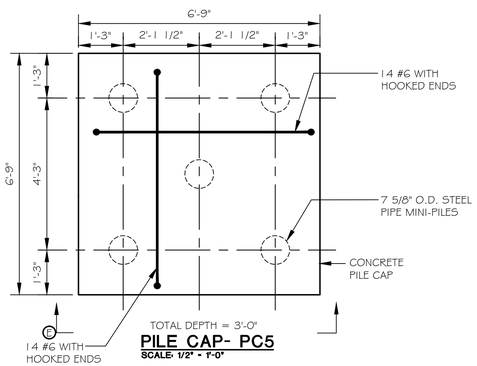

PILE CAP- PC5
SCALE: 1/2" = 1'-0"

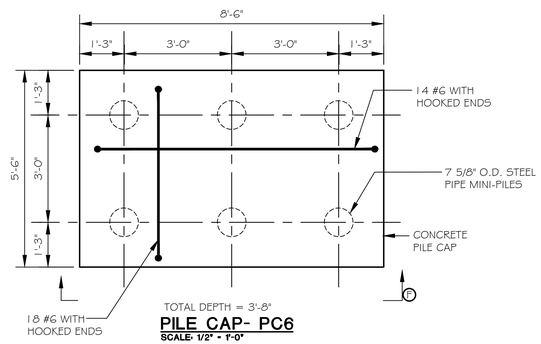

PILE CAP- PC6
SCALE: 1/2" = 1'-0"

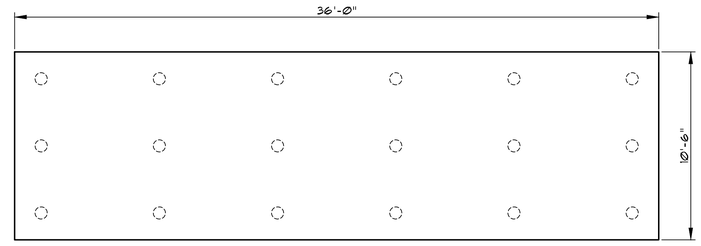

PILE CAP- PC18
SCALE: 1/4" = 1'-0"

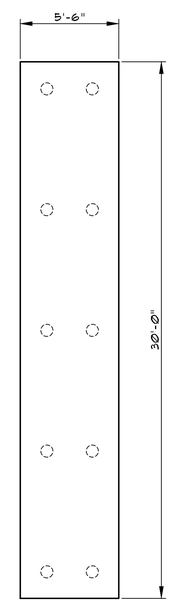

PILE CAP- PC10
SCALE: 1/4" = 1'-0"

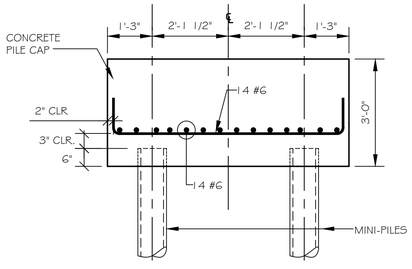

SECTION Ⓔ
SCALE: 1/2" = 1'-0"

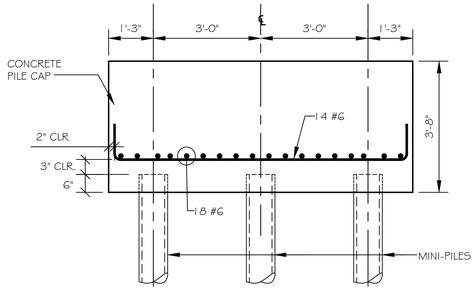

SECTION Ⓕ
SCALE: 1/2" = 1'-0"

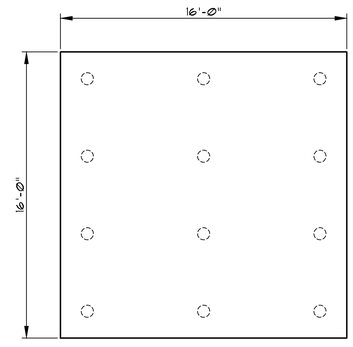

PILE CAP- PC12
SCALE: 1/4" = 1'-0"

STRUCTURAL ENGINEERING TECHNOLOGIES, P.C.

CONSULTING STRUCTURAL AND FOUNDATION ENGINEERS

40-12 28TH STREET
LONG ISLAND CITY, NY 11101
T(718)706-7196 F(718)472-4464

ALL RIGHTS RESERVED
ALL DRAWINGS SPECIFICATIONS AND COPIES THEREOF FURNISHED BY S.E.T., P.C. ARE AND WILL REMAIN THEIR PROPERTY. THEY ARE NOT TO BE USED ON THIS OR ANY OTHER PROJECT UNLESS WRITTEN PERMISSION IS GIVEN.

OWNER:

NOTE:
STRUCTURAL ENGINEERING TECHNOLOGIES, P.C. HAS NOT BEEN RETAINED TO PERFORM CONTROLLED INSPECTIONS OF ANY KIND FOR THIS PROJECT.

NO.	DATE:	DESCRIPTION

REVISONS:

FILINGS:

PROJECT

526 UNION AVENUE
BROOKLYN, N.Y. 11211

FACADE RENOVATION AND BROWNSTONE REPAIR

DRAWING TITLE:

PILE CAP DETAILS

SEAL & SIGNATURE

STATE OF NEW YORK
GEORGE J. CAMBIDORAKIS
No. 060244-1
LICENSED PROFESSIONAL ENGINEER

DATE:	09-23-14
PROJECT NO:	
SCALE:	AS NOTED
DRAWING BY:	M.M.
CHECKED BY:	G.J.C.
DWG NO:	FO-202.00
SHEET NO:	OF

BSCAN STICKER

DOB APPROVAL STAMP

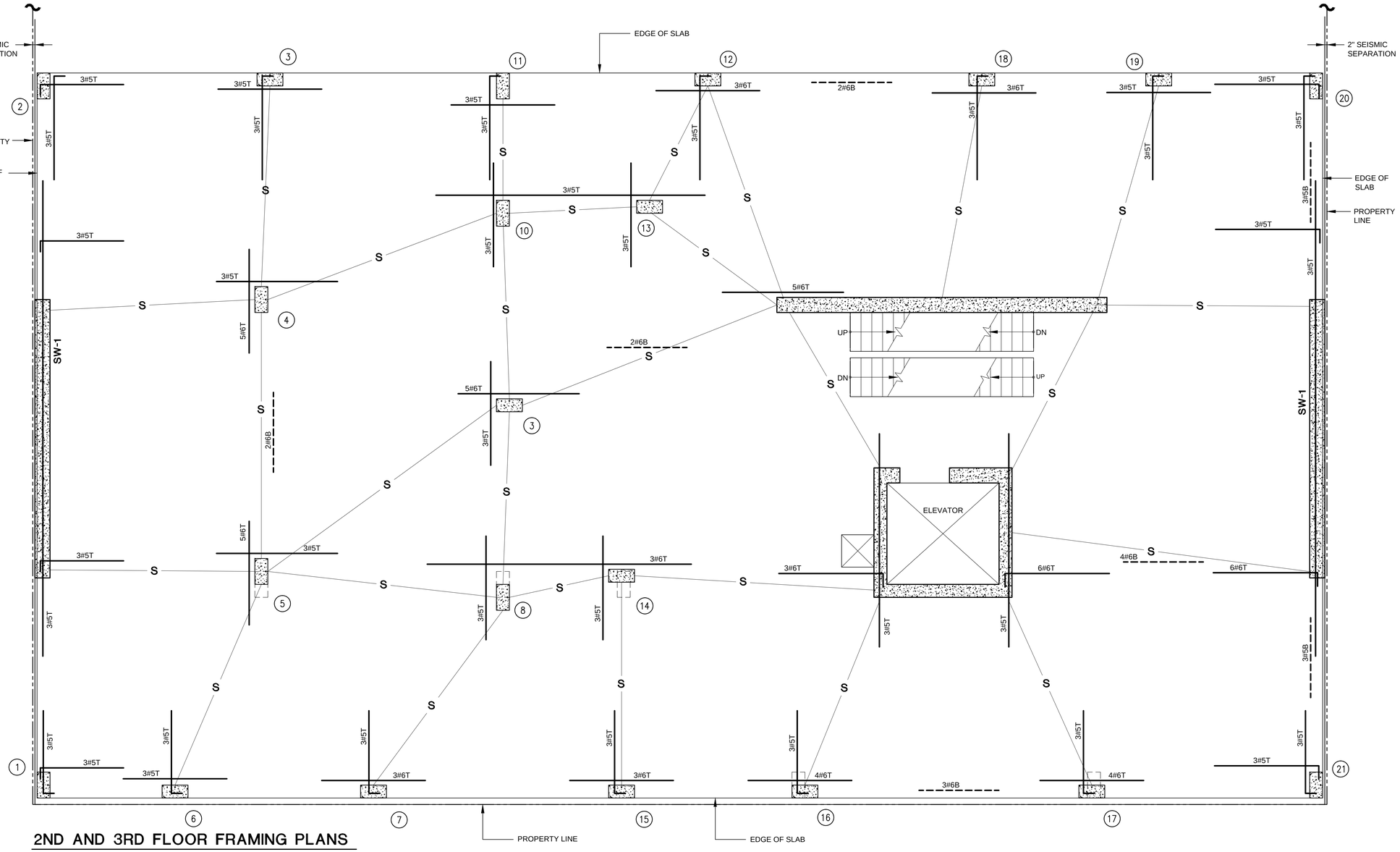

2ND AND 3RD FLOOR FRAMING PLANS

SCALE: 1/4" = 1'-0"

NOTES:

1. TOP OF SLAB IS AT ELEVATION
2. SLAB SHALL BE 8" U.O.N.`
3. TYPICAL SLAB REINFORCING SHALL BE #4@12" EACH WAY TOP AND #4@12" EACH. WAY BOTTOM. REINFORCING SHOWN ON PLAN IS ADDITIONAL TO TYPICAL REINFORCING.
4. FOR TYPICAL DETAILS SEE SERIES S-400 DRAWINGS.
5. FOR COLUMN SCHEDULE AND SHEAR WALL DETAILS SEE SERIES S-300 DRAWINGS.
6. ALL REINF. BARS IN CONCRETE EXPOSED TO MOISTURE IN SERVICE SUCH AS BALCONIES, TERRACES SHALL BE EPOXY-COATED.

STRUCTURAL ENGINEERING TECHNOLOGIES, P.C.

CONSULTING STRUCTURAL AND FOUNDATION ENGINEERS

40-12 28TH STREET
LONG ISLAND CITY, NY 11101
T(718)706-7196 F(718)472-4464

ALL RIGHTS RESERVED

ALL DRAWINGS SPECIFICATIONS AND COPIES THEREOF FURNISHED BY S.E.T., P.C. ARE AND WILL REMAIN THEIR PROPERTY. THEY ARE NOT TO BE USED ON THIS OR ANY OTHER PROJECT UNLESS WRITTEN PERMISSION IS GIVEN.

OWNER:

NOTE:
STRUCTURAL ENGINEERING TECHNOLOGIES, P.C. HAS NOT BEEN RETAINED TO PERFORM CONTROLLED INSPECTIONS OF ANY KIND FOR THIS PROJECT.

NO.	DATE:	DESCRIPTION

REVISONS:

FILINGS:

PROJECT

526 UNION AVENUE

FACADE RENOVATION AND BROWNSTONE REPAIR

DRAWING TITLE:

2ND AND 3RD FLOOR FRAMING PLANS

SEAL & SIGNATURE

STATE OF NEW YORK
GEORGE J. CAMBRIDGE
No. 061244-1
LICENSED PROFESSIONAL ENGINEER

DATE:	09-23-14
PROJECT NO:	
SCALE:	AS NOTED
DRAWING BY:	M.M.
CHECKED BY:	G.J.C.
DWG NO:	**S-101.00**
SHEET NO:	OF

BSCAN STICKER

DOB APPROVAL STAMP

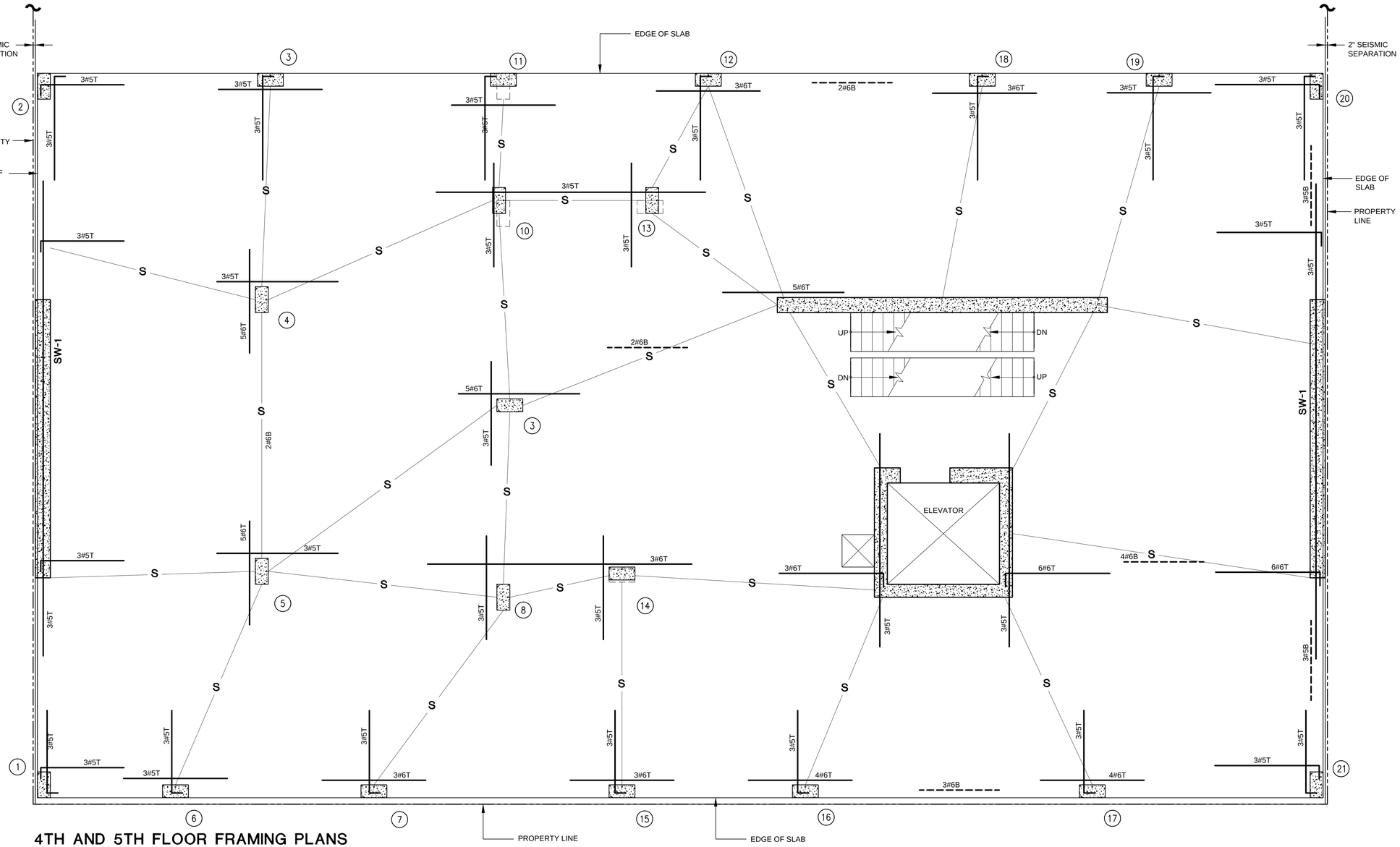

4TH AND 5TH FLOOR FRAMING PLANS

SCALE: 1/4" = 1'-0"

NOTES:

1. TOP OF SLAB IS AT ELEVATION

2. SLAB SHALL BE 8" U.O.N.

3. TYPICAL SLAB REINFORCING SHALL BE #4@12" EACH WAY TOP AND #4@12" EACH. WAY BOTTOM. REINFORCING SHOWN ON PLAN IS ADDITIONAL TO TYPICAL REINFORCING.

4. FOR TYPICAL DETAILS SEE SERIES S-400 DRAWINGS.

5. FOR COLUMN SCHEDULE AND SHEAR WALL DETAILS SEE SERIES S-300 DRAWINGS.

6. ALL REINF. BARS IN CONCRETE EXPOSED TO MOISTURE IN SERVICE SUCH AS BALCONIES, TERRACES SHALL BE EPOXY-COATED.

STRUCTURAL ENGINEERING TECHNOLOGIES, P.C.

CONSULTING STRUCTURAL AND FOUNDATION ENGINEERS

40-12 28TH STREET
LONG ISLAND CITY, NY 11101
T(718)706-7196 F(718)472-4464

ALL RIGHTS RESERVED

ALL DRAWINGS SPECIFICATIONS AND COPIES THEREOF FURNISHED BY S.E.T., P.C. ARE AND WILL REMAIN THEIR PROPERTY. THEY ARE NOT TO BE USED ON THIS OR ANY OTHER PROJECT UNLESS WRITTEN PERMISSION IS GIVEN.

OWNER:

NOTE:
STRUCTURAL ENGINEERING TECHNOLOGIES, P.C. HAS NOT BEEN RETAINED TO PERFORM CONTROLLED INSPECTIONS OF ANY KIND FOR THIS PROJECT.

NO.	DATE:	DESCRIPTION

REVISONS:

FILINGS:

PROJECT

526 UNION AVENUE

FACADE RENOVATION AND BROWNSTONE REPAIR

DRAWING TITLE:

4TH AND 5TH FLOOR FRAMING PLANS

SEAL & SIGNATURE

STATE OF NEW YORK
GEORGE J. CAMBOURIS
No. 061244-1
LICENSED PROFESSIONAL ENGINEER

DATE:	09-23-14
PROJECT NO:	
SCALE:	AS NOTED
DRAWING BY:	M.M.
CHECKED BY:	G.J.C.
DWG NO:	S-102.00
SHEET NO:	OF

BSCAN STICKER

DOB APPROVAL STAMP

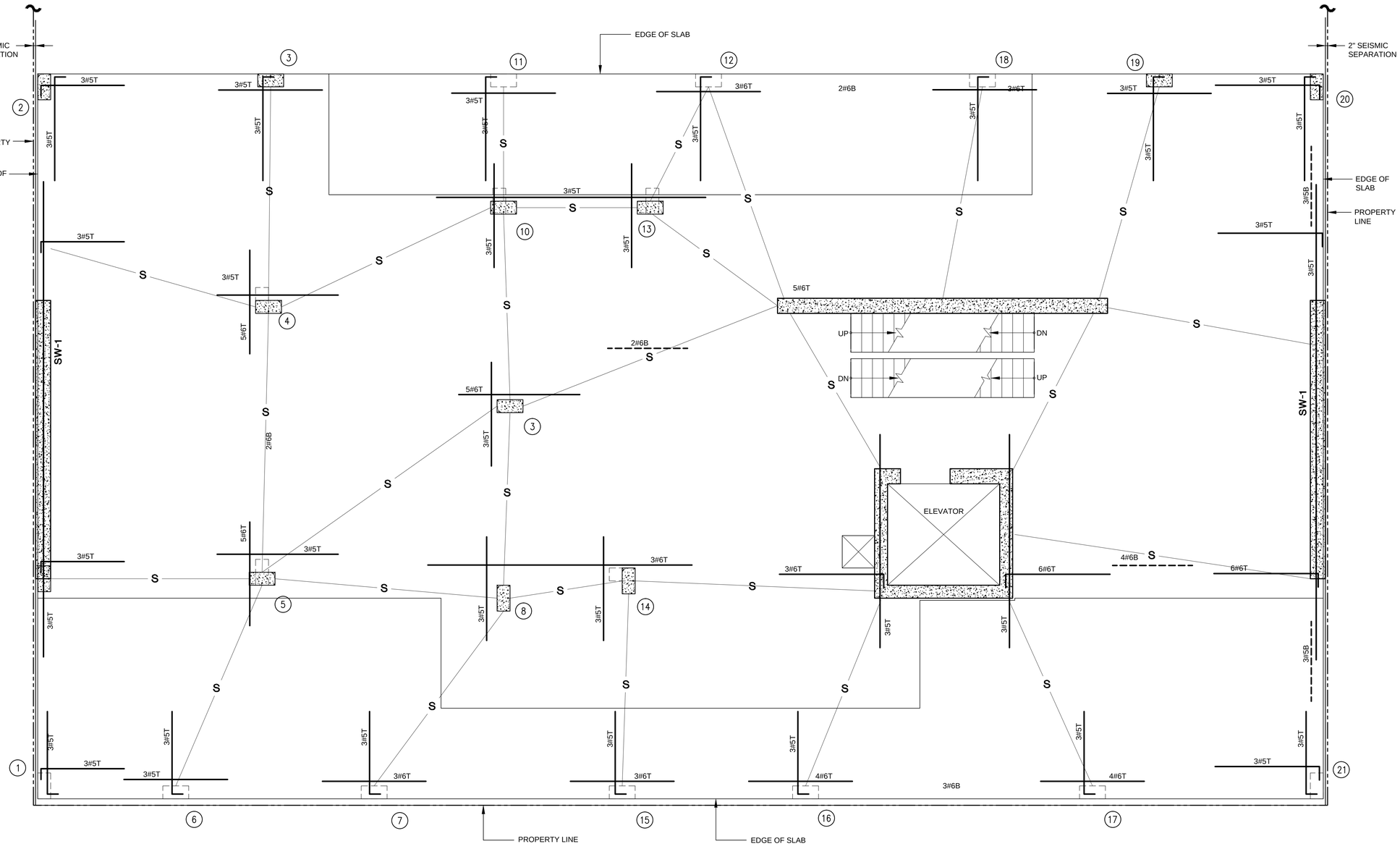

6TH FLOOR FRAMING PLAN

SCALE: 1/4" = 1'-0"

NOTES:

1. TOP OF SLAB IS AT ELEVATION

2. SLAB SHALL BE 8" U.O.N.

3. TYPICAL SLAB REINFORCING SHALL BE #5@12" EACH WAY TOP AND #4@12" EACH. WAY BOTTOM. REINFORCING SHOWN ON PLAN IS ADDITIONAL TO TYPICAL REINFORCING.

4. FOR TYPICAL DETAILS SEE SERIES S-400 DRAWINGS.

5. FOR COLUMN SCHEDULE AND SHEAR WALL DETAILS SEE SERIES S-300 DRAWINGS.

6. ALL REINF. BARS IN CONCRETE EXPOSED TO MOISTURE IN SERVICE SUCH AS BALCONIES, TERRACES SHALL BE EPOXY-COATED.

STRUCTURAL ENGINEERING TECHNOLOGIES, P.C.

CONSULTING STRUCTURAL AND FOUNDATION ENGINEERS

40-12 28TH STREET
LONG ISLAND CITY, NY 11101
T(718)706-7196 F(718)472-4464

ALL RIGHTS RESERVED

ALL DRAWINGS SPECIFICATIONS AND COPIES THEREOF FURNISHED BY S.E.T., P.C. ARE AND WILL REMAIN THEIR PROPERTY. THEY ARE NOT TO BE USED ON THIS OR ANY OTHER PROJECT UNLESS WRITTEN PERMISSION IS GIVEN.

OWNER:

NOTE:
STRUCTURAL ENGINEERING TECHNOLOGIES, P.C. HAS NOT BEEN RETAINED TO PERFORM CONTROLLED INSPECTIONS OF ANY KIND FOR THIS PROJECT.

NO.	DATE:	DESCRIPTION

REVISONS:

FILINGS:

PROJECT

526 UNION AVENUE

FACADE RENOVATION AND BROWNSTONE REPAIR

DRAWING TITLE:

6TH FLOOR FRAMING PLAN

SEAL & SIGNATURE

STATE OF NEW YORK
GEORGE J. CAMBRIDGE
No. 060234-1
LICENSED PROFESSIONAL ENGINEER

DATE:	09-23-14
PROJECT NO:	
SCALE:	AS NOTED
DRAWING BY:	M.M.
CHECKED BY:	G.J.C.
DWG NO:	**S-103.00**
SHEET NO:	OF

BSCAN STICKER

DOB APPROVAL STAMP

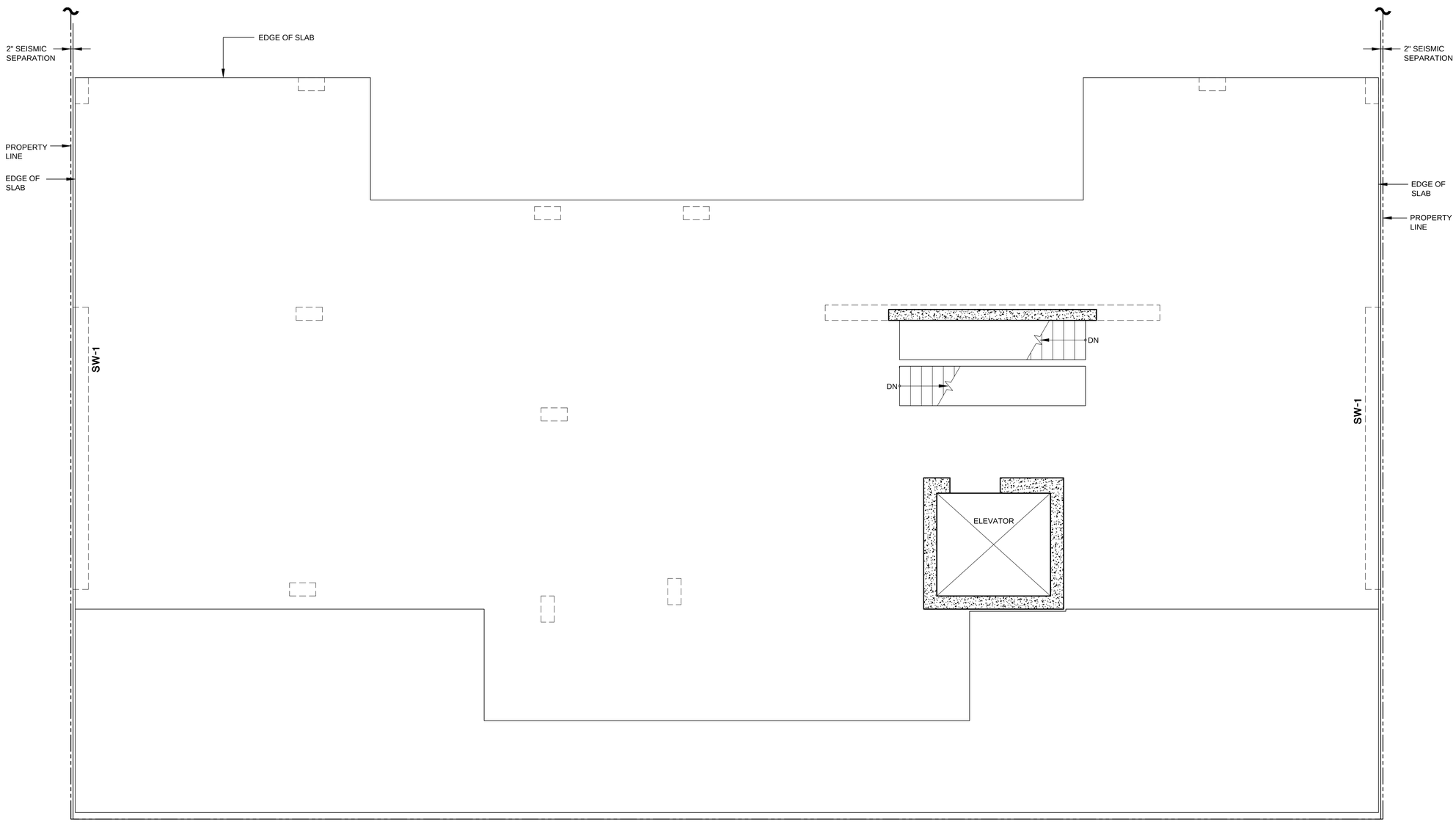

ROOF FRAMING PLAN

SCALE: 1/4" = 1'-0"

NOTES:

1. TOP OF SLAB IS AT ELEVATION

2. SLAB SHALL BE 8" U.O.N.

3. TYPICAL SLAB REINFORCING SHALL BE #5@12" EACH WAY TOP AND #4@12" EACH. WAY BOTTOM. REINFORCING SHOWN ON PLAN IS ADDITIONAL TO TYPICAL REINFORCING.

4. FOR TYPICAL DETAILS SEE SERIES S-400 DRAWINGS.

5. FOR COLUMN SCHEDULE AND SHEAR WALL DETAILS SEE SERIES S-300 DRAWINGS.

6. ALL REINF. BARS IN CONCRETE EXPOSED TO MOISTURE IN SERVICE SUCH AS BALCONIES, TERRACES SHALL BE EPOXY-COATED.

STRUCTURAL ENGINEERING TECHNOLOGIES, P.C.

CONSULTING STRUCTURAL AND FOUNDATION ENGINEERS

40-12 28TH STREET
LONG ISLAND CITY, NY 11101
T(718)706-7196 F(718)472-4464

ALL RIGHTS RESERVED
ALL DRAWINGS SPECIFICATIONS AND COPIES THEREOF FURNISHED BY S.E.T., P.C. ARE AND WILL REMAIN THEIR PROPERTY. THEY ARE NOT TO BE USED ON THIS OR ANY OTHER PROJECT UNLESS WRITTEN PERMISSION IS GIVEN.

OWNER:

NOTE:
STRUCTURAL ENGINEERING TECHNOLOGIES, P.C. HAS NOT BEEN RETAINED TO PERFORM CONTROLLED INSPECTIONS OF ANY KIND FOR THIS PROJECT.

NO.	DATE:	DESCRIPTION

REVISONS:

FILINGS:

PROJECT

526 UNION AVENUE

FACADE RENOVATION AND BROWNSTONE REPAIR

DRAWING TITLE:

ROOF FRAMING PLAN

SEAL & SIGNATURE

STATE OF NEW YORK
GEORGE J. CAMBRIDGE
No. 061244-1
LICENSED PROFESSIONAL ENGINEER

DATE:	09-23-14
PROJECT NO:	
SCALE:	AS NOTED
DRAWING BY:	M.M.
CHECKED BY:	G.J.C.
DWG NO:	**S-104.00**
SHEET NO:	OF

BSCAN STICKER

DOB APPROVAL STAMP

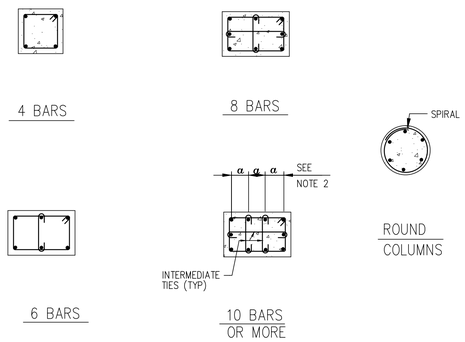

COLUMN TIE SCHEDULE		
SIZE OF VERT. REINF.	SIZE OF TIES	SPACING OF TIES
#5 & #6	#3	10" OR MIN. COLUMN DIMENSTIONS, WHICHEVER IS SMALLER
#5 TO #10	#3	12" OR MIN. COLUMN DIMENSTIONS, WHICHEVER IS SMALLER
#11 & UP	#4	22" OR MIN. COLUMN DIMENSTIONS, WHICHEVER IS SMALLER

NOTES:
UNLESS OTHERWISE INDICATED IN COLUMN SCHEDULE.

1. TOTAL NUMBER OF BARS SHOULD BE SPACED AROUND PERIMETER IN SUCH A WAY AS TO ACHIEVE APPROXIMATELY EQUAL SPACING.
2. FOR a < 6" ALTERNATE INTERMEDIATE TIES MAY BE OMITTED.
3. THE ABOVE DETAILS APPLY ALSO AT BUTTRESSES.
4. MIN. VERTICAL BAR SPACING (O.C.) SHALL BE 2 X BAR DIA.
5. FOR COLUMN TIE SPACING SEE TABLE ON DWG. ...
6. CONCRETE COVER FOR MAIN COLUMN REINF. SHALL BE 2" MIN.

01
SCALE: NTS
PLACEMENT OF REINFORCEMENT IN CONCRETE COLUMNS

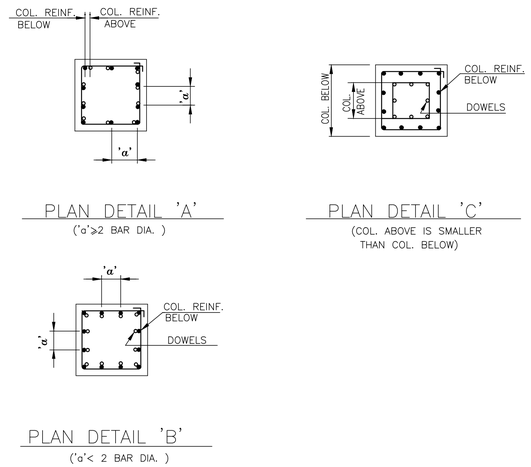

NOTES:

1. PROVIDE LAP SPLICE •LTS AS PER SCHEDULE OF EMBEDMENT & SPLICE LENGTHS ON DWG ...
2. ANY COMBINATION OF DETAILS 'A','B' & 'C' MAY BE USED IN THE SAME COLUMN IF REQUIRED.
3. CROSS TIES ARE NOT SHOWN IN ABOVE PLAN DETAILS. FOR CROSS TIES REQUIREMENTS REFER TO ADDITIONAL COL. DETAILS.

02
SCALE: NTS
CONCRETE COLUMN REINFORCEMENT LAP SPLICES

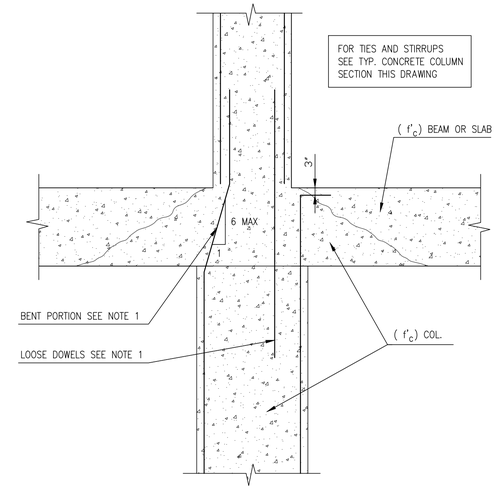

NOTE 1:

A) BENT PORTION OF COLUMN REINFORCING SHALL BE WITHIN FLOOR CONSTRUCTION.
B) IF A SLOPE OF 1:6 CANNOT BE ACCOMPLISHED PROVIDE LOOSE DOWELS – EXTEND BARS OR DOWELS SHALL EQUAL AREA OF VERTICAL COLUMN REINFORCEMENT ABOVE.
C) REINFORCEMENT NOT EXTENDED OR SPLICED SHALL BE TERMINATED WITH 1'-0" HOOK.
D) WHEN COLUMN ABOVE IS LARGER THAN COLUMN BELOW EXTEND REINFORCEMENT FROM COLUMN BELOW INTO COLUMN ABOVE AND SPLICE IN ACCORDANCE WITH TYP. CONCRETE COLUMN SECTION ON THIS DRAWING.

03
SCALE: NTS
CONCRETE COLUMN AT CHANGE IN SIZE

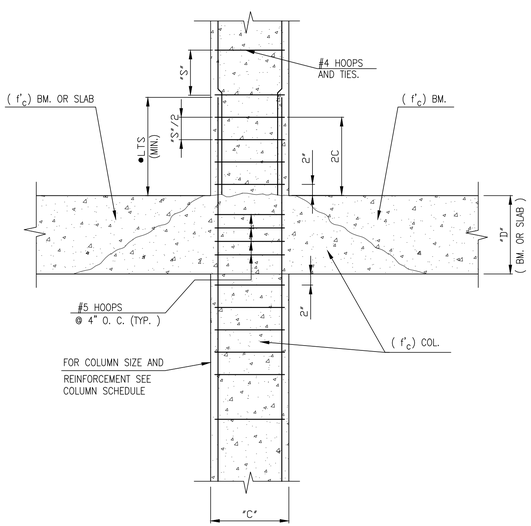

05
SCALE: NTS
TYPICAL CONCRETE COLUMN SECTION

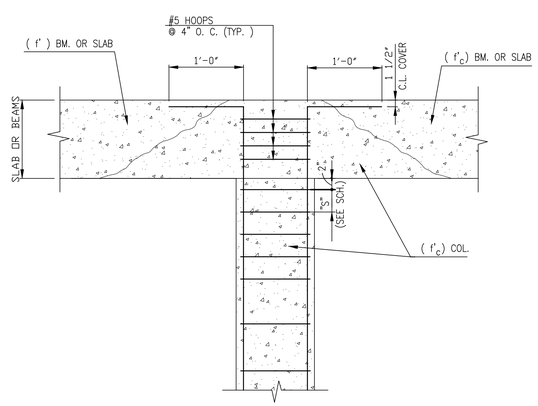

06
SCALE: NTS
TYPICAL CONCRETE COLUMN @ TOP END

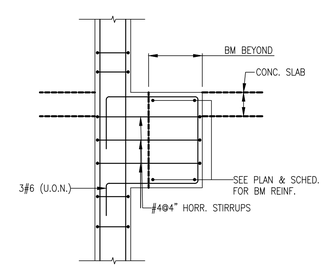

07
SCALE: NTS
TYPICAL DETAIL AT ECCENTRIC BEAM BEAM TO COLUMN CONNECTION

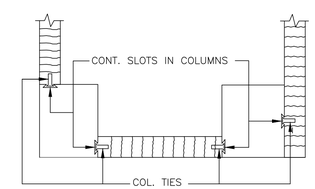

NOTE:

COLUMN TIES SHALL BE 11 GAGE
NONE-CORRODING TIES EVERY 6 th BLOCK COURSE.

03
SCALE: NTS
ANCHORING MASONRY IN CONCRETE

STRUCTURAL ENGINEERING TECHNOLOGIES, P.C.

CONSULTING STRUCTURAL AND FOUNDATION ENGINEERS

40-12 28TH STREET
LONG ISLAND CITY, NY 11101
T(718)706-7196 F(718)472-4464

ALL RIGHTS RESERVED
ALL DRAWINGS SPECIFICATIONS AND COPIES THEREOF FURNISHED BY S.E.T., P.C. ARE AND WILL REMAIN THEIR PROPERTY. THEY ARE NOT TO BE USED ON THIS OR ANY OTHER PROJECT UNLESS WRITTEN PERMISSION IS GIVEN.

OWNER:

NOTE:
STRUCTURAL ENGINEERING TECHNOLOGIES, P.C. HAS NOT BEEN RETAINED TO PERFORM CONTROLLED INSPECTIONS OF ANY KIND FOR THIS PROJECT.

NO.	DATE:	DESCRIPTION

REVISONS:

FILINGS:

PROJECT

526 UNION AVENUE
BROOKLYN, N.Y. 11211

FACADE RENOVATION AND BROWNSTONE REPAIR

DRAWING TITLE:

TYPICAL COLUMN DETAILS

SEAL & SIGNATURE

STATE OF NEW YORK
GEORGE J. CAMBRIDGE
No. 061234-1
LICENSED PROFESSIONAL ENGINEER

DATE:	09-23-14
PROJECT NO:	
SCALE:	AS NOTED
DRAWING BY:	M.M.
CHECKED BY:	G.J.C.
DWG NO:	S-302.00
SHEET NO:	OF

BSCAN STICKER

DOB APPROVAL STAMP

GENERAL NOTES:

1. WORK OF THIS CONTRACT SHALL COMPLY WITH ALL THE REQUIREMENTS OF THE BUILDING CODE OF THE CITY OF NEW YORK.

2. THE WORK OF THIS CONTRACT SHALL INCLUDE ALL EARTHWORK, FOUNDATION AND DEWATERING, CONCRETE, AND ROOF DECK, AS REQUIRED TO DO A FULL AND COMPLETE WORK.

3. THE SOILS ENGINEERING CONSULTANT LICENSED IN THE STATE OF NEW YORK RETAINED BY THE GENERAL CONTRACTOR SHALL BE RESPONSIBLE FOR INSPECTION AND APPROVAL OF TEMPORARY SHEETING & BRACING, IF REQUIRED.

4. CONTRACTOR SHALL COORDINATE HIS WORK WITH ALL OTHER TRADES AND INSTALL ANY REQUIRED OPENINGS, ANCHORS, INSERTS, CONDUITS FOR COMPLETION OF THEIR WORK UNDER THIS CONTRACT. HE SHALL COORDINATE HIS WORK WITH EQUIPMENT MANUFACTURERS AS WELL AS THE CONSTRUCTION MANAGER FOR OWNER-FURNISHED ITEMS.

5. FLOOR DEPRESSIONS AND OPENINGS:

   a) FLOOR DEPRESSIONS AND OPENINGS TO BE PROVIDED WHERE EQUIPMENT OR FLOOR FINISHES REQUIRE THEM, WHETHER OR NOT INDICATED ON STRUCTURAL DRAWINGS. IT SHALL BE THE RESPONSIBILITY OF THE CONTRACTOR TO COORDINATE HIS WORK WITH ARCHITECTURAL AND MECHANICAL DRAWINGS AND SPECIFICATIONS AND PROVIDE DEPRESSIONS, TRENCH HEADERS AND OPENINGS AS REQUIRED.

   b) CONTRACTOR SHALL PROVIDE A COMPOSITE PENETRATION DRAWING FOR EACH FLOOR SHOWING PRECISE LOCATION AND SIZE OF ALL SLEEVES, BOXED OPENINGS AND DEPRESSIONS FOR ALL TRADES. APPROVED COPIES OF THESE DRAWINGS SHALL BE USED BY DETAILER TO PROVIDE NECESSARY ADDITIONAL REINFORCEMENT AT ALL SUCH LOCATIONS IN ACCORDANCE WITH CONTRACT DRAWINGS AND SPECIFICATIONS. BOXED OPENINGS WILL NOT BE ALLOWED UNLESS SPECIFICALLY SHOWN ON DWGS.

6. THE CONTRACTOR SHALL BE COMPLETELY RESPONSIBLE FOR THE SAFETY AND INTEGRITY OF EXISTING STRUCTURE. THE CONTRACTOR SHALL UTILIZED SUCH MEANS AS NECESSARY TO PROVIDE TEMPORARY SUPPORTS FOR EXISTING STRUCTURE UNTIL SUCH TIME THAT ALL PERMANENT MEMBERS AND CONNECTIONS ARE SECURED IN PLACE.

7. ALL CONTRACTORS ARE REQUESTED TO EXAMINE THE DRAWINGS AND SPECIFICATIONS CAREFULLY, VISIT THE SITE, FULLY INFORM THEMSELVES AS TO ALL EXISTING CONDITIONS AND LIMITATIONS, PRIOR TO SUBMITTING THE PROPOSAL. FAILURE TO VISIT THE SITE AND NOT FAMILIARIZING WITH THE EXISTING CONDITIONS AND LIMITATIONS WILL IN NO WAY RELIEVE SUCCESSFUL BIDDER FROM FURNISHING ANY MATERIALS OR PERFORMING ANY WORK THAT MAY BE REQUIRED TO COMPLETE WORK IN ACCORDANCE WITH DRAWINGS AND SPECIFICATIONS WITHOUT ADDITIONAL COST TO OWNER.

   a) THE CONTRACTOR SHALL SUBMIT A DETAILED PHASING AND DEMOLITION WORKING PLANS FOR A/E REVIEW PRIOR TO THE INCEPTION OF ANY DEMOLITION WORK.

8. CONTRACTOR SHALL VERIFY ALL FIELD DIMENSIONS RELATED TO THE NEW WORK AND SHALL REPORT DISCREPANCIES, IF ANY, TO THE ENGINEER, PRIOR TO THE FABRICATION OF ANY MATERIALS.

FOUNDATION NOTES:

1. DRILLED PILES HAVING A MINIMUM CAPACITY OF TONS EACH SHALL BE USED WHEN PILE CAPS ARE DESIGNATED PCS.

2. THE SITE SHALL BE PROTECTED AGAINST CAVING AND MOVEMENT OF SOIL AT ALL TIMES.

3. THE CONTRACTOR WILL BE REQUIRED TO SAFELY SUPPORT AND MAINTAIN ADJACENT AND ABUTTING PROPERTY AND STRUCTURES. THE CONTRACTOR WILL BE REQUIRED TO MAINTAIN THE WORK SITE SAFE TO LIFE, LIMB AND PROPERTY.

4. CONTRACTOR SHALL FAMILIARIZE HIMSELF WITH THE SUBSURFACE CONDITIONS BEFORE COMMENCING ANY EXCAVATION.

5. BEFORE ANY FOUNDATIONS ARE CONSTRUCTED, CONTRACTOR SHALL ESTABLISH BY SURVEY THE EXACT LOCATION OF ALL UNDERGROUND UTILITIES AND TRENCHES AND PIPING TO REMAIN IN THE FINISHED WORK. THESE LOCATIONS SHALL BE SUBMITTED ON DRAWINGS TO THE ARCHITECT FOR REVIEW. THE CONTRACTOR SHALL BE RESPONSIBLE FOR THE SAFETY OF ALL EXISTING CONSTRUCTION AND SHALL REPAIR ANY DAMAGE TO THE SATISFACTION OF THE OWNER AT NO EXTRA COST TO THE OWNER.

6. NO BACK FILLING SHALL BE DONE AGAINST FOUNDATION AND RETAINING WALLS UNTIL CONCRETE HAS ATTAINED AT LEAST 75% OF ITS 28 DAY STRENGTH. BEFORE BACKFILLING, PROVIDE BRACING FOR WALLS SUSTAINING MORE THAN 3 FEET OF EARTH PRESSURE. THIS BRACING SHALL REMAIN IN PLACE UNTIL ALL SLABS (INCLUDING SLAB ON GRADE) AND BEAMS FRAMING INTO WALL HAVE BEEN PLACED AND SET.

7. IN NO CASE SHALL BULLDOZERS OR OTHER HEAVY EQUIPMENT BE PERMITTED CLOSER THAN 8 FEET FROM ANY FOUNDATION WALL. IF IT IS NECESSARY TO OPERATE SUCH EQUIPMENT CLOSER THAN 8 FEET TO THE WALL, THE CONTRACTOR SHALL BE THE SOLE RESPONSIBLE PARTY AND AT HIS OWN EXPENSE SHALL PROVIDE ADEQUATE SUPPORTS OR BRACE THE WALL TO WITHSTAND THE ADDITIONAL LOADS SUPERIMPOSED FROM SUCH EQUIPMENT.

8. VERTICAL CONSTRUCTION JOINTS IN WALLS AND GRADE BEAMS SHALL BE LOCATED AT LEAST 8 FEET FROM ANY BUTTRESS. COLUMN LINES OR WALL OPENINGS FOR FOUNDATION WALLS, AND AT CENTER LINE BETWEEN SUPPORTS FOR GRADE BEAMS. SEE TYPICAL CONSTRUCTION JOINT DETAILS.

9. NO HORIZONTAL CONSTRUCTION JOINT WILL BE PERMITTED IN WALLS AND GRADE BEAMS UNLESS SPECIFICALLY SHOWN ON PLANS OR SECTIONS. SEE TYPICAL CONSTRUCTION JOINT DETAILS.

CONCRETE NOTES:

1. CONCRETE DESIGN DETAIL AND CONSTRUCTION TO CONFORM TO THE LATEST PROVISIONS OF THE AMERICAN CONCRETE INSTITUTE BUILDING CODE REQUIREMENTS FOR REINFORCED CONCRETE, ACI 318-95, "SPECIFICATIONS FOR STRUCTURAL CONCRETE FOR BUILDINGS", ACI (LATEST EDITION), THE SPECIFICATIONS, AND THE BUILDING CODE OF THE CITY OF NEW YORK.

2. ALL CONCRETE SHALL BE CONTROLLED NORMAL WEIGHT CONCRETE HAVING A MINIMUM COMPRESSIVE STRENGTH AT 28 DAYS AS LISTED BELOW. MINIMUM CEMENT CONTENT SHALL BE AS STATED IN THE SPECIFICATIONS AND NOTED BELOW.

SHEAR WALL FOOTINGS AND PILE CAPS	f'_c = 4,000 PSI, STONE
OTHER FOOTINGS AND PILE CAPS	f'_c = 4,000 PSI, STONE
SLAB-ON-GRADE	f'_c = 3,000 PSI, STONE
ELEVATED SLABS	= 4000 PSI
COLUMNS	= 4000 PSI
SHEAR WALLS	= 4000 PSI
ALL OTHER	= 4000 PSI

NO CONCRETE SHALL BE PLACED UNTIL THE DESIGN MIXES HAVE BEEN APPROVED.

3. CONCRETE EXPOSED TO WEATHER IN SERVICE SHALL HAVE A MAXIMUM W/C RATION OF 0.40.

4. REINFORCEMENT TO CONSIST OF INTERMEDIATE GRADE DEFORMED BARS CONFORMING TO SPECIFICATIONS OF ASTM A615 GRADE 60. WELDED WIRE FABRIC SHALL CONFORM TO ASTM SPECIFICATION A 185, LATEST EDITION AND ACI SP-66, LATEST EDITION. REINFORCEMENT OF CONCRETE EXPOSED TO MOISTURE SHALL BE EPOXY-COATED.

5. THE CONCRETE CONTRACTOR SHALL COOPERATE WITH ALL OTHER TRADES IN PERMITTING THE FORMING AND SETTING OF SLOTS, RECESSES, CHASES, SLEEVES, INSERTS, BOLTS, HANGERS, OPENINGS AND EQUIPMENT. THE CONTRACTOR SHALL CUT OR FORM POCKETS IN WALLS TO RECEIVE BEAMS OR COLUMNS WHERE REQUIRED.

6. WHERE STIRRUPS OR TIES EXTEND BEYOND THE MAIN TOP REINFORCEMENT ADD 2-#5 REBARS CONT. IN ALL CONCRETE BEAMS AND GIRDERS FOR THE LENGTH OF THE STIRRUP OR TIE SPACING.

7. ALL REINFORCEMENT SHALL BE SECURELY HELD IN PLACE WHILE PLACING CONCRETE. IF REQUIRED, ADDITIONAL BARS OR STIRRUPS SHALL BE PROVIDED BY THE CONTRACTOR TO FURNISH SUPPORT FOR ALL BARS.

8. ALL CONTINUOUS REINFORCING BARS SHALL BE LAPPED AS PER EMBEDMENT AND SPLICE LENGTH SCHEDULE ON DRAWING S403. LAP CONTINUOUS TOP REINFORCEMENT AT CENTER OF SPAN AS REQUIRED. LAP CONTINUOUS BOTTOM BARS AT SUPPORTS AS REQUIRED. TERMINATE CONTINUOUS BARS AT NON-CONTINUOUS END WITH STANDARD HOOK.

9. MINIMUM CONCRETE COVER FOR REINFORCING STEEL SHALL BE THREE-FOURTH (3/4") INCHES FOR SLABS, ONE AND ONE-HALF (1-1/2") INCHES FOR BEAMS AND ONE (1") INCH FOR WALLS. ALL CONCRETE EXPOSED TO WEATHER OR EARTH FILL SHALL HAVE MINIMUM CONCRETE COVER OF TWO (2") INCHES FOR BARS LARGER THAN #5, ONE AND ONE-HALF (1-1/2") INCHES FOR #5 BARS OR SMALLER, AND THREE (3") INCHES FOR ALL CONCRETE PLACED AGAINST EARTH. ALL CONCRETE PLACED AGAINST PERMANENT SHEETING SHALL HAVE MINIMUM CONCRETE COVER OF FOUR (4") INCHES.

10 ALL CONCRETE EXPOSED TO WEATHER SHALL BE AIR ENTRAINED.

11. VERTICAL CONSTRUCTION JOINTS USING APPROVED BULKHEADS MAY BE MADE AT CENTER OF BEAM AND SLAB SPANS WHERE STOP IN CONCRETE WORK IS NECESSARY. LOCATION OF VERTICAL CONSTRUCTION JOINTS IN EXPOSED STRUCTURAL ELEMENTS, SHALL BE COORDINATED WITH ARCHITECTURAL DRAWINGS. VERTICAL WALL CONSTRUCTION JOINTS SHALL BE LOCATED SO AS TO PROVIDE A 60'-0" MAXIMUM LENGTH OF CONCRETE PLACEMENT. SUCH JOINTS SHALL BE LOCATED AT CENTERLINES OF WALL SPANS BETWEEN SUPPORTS.

SEE TYPICAL CONSTRUCTION JOINT DETAILS FOR ADDITIONAL INFORMATION.

12. CONTRACTOR SHALL SUBMIT DRAWINGS SHOWING INTENDED POURING SEQUENCE AND LOCATION OF CONSTRUCTION JOINTS TO THE ENGINEER FOR APPROVAL.

13. NO HORIZONTAL CONSTRUCTION JOINT WILL BE PERMITTED IN WALLS, BEAMS AND SLAB UNLESS SPECIFICALLY SHOWN ON PLANS OR SECTIONS.

14. ALL BEAMS AND SLABS TO BE POURED MONOLITHICALLY UNLESS OTHERWISE NOTED.

15. PIPES OR CONDUITS PLACED IN SLABS SHALL NOT HAVE AN O.D. LARGER THAN 1/3 THE SLAB THICKNESS AND SHALL NOT BE SPACED CLOSER THAN 3 DIAMETER ON CENTERS. ALUMINUM CONDUITS SHALL NOT BE PLACED IN CONCRETE. NO CONDUITS SHALL BE PLACED IN SLAB WITHIN 12" OF COLUMN FACE.

16. FOR LOCATION OF FLOOR DRAINS, CURBS, CONCRETE PADS AND FLOOR DEPRESSIONS SEE ARCHITECTURAL AND MECHANICAL DRAWINGS.

17. FOR LOCATION AND DETAILS OF REGLETS AND DRIPS SEE ARCHITECTURAL DRAWINGS.

18. CHAMFER ALL EXPOSED CONCRETE CORNERS. SEE ARCHITECTURAL DRAWINGS FOR DETAILS.

19. PROVIDE MINIMUM 6 X 6 - W 1.4 X W 1.4 WELDED WIRE FABRIC IN CONCRETE FILL. PLACE MESH 1" CLEAR FROM TOP OF FILL. SEE ARCHITECTURAL DRAWINGS FOR DETAILS.

20. WHEN REQUIRED BY OTHER TRADES PROVIDE PADS FOR MECHANICAL EQUIPMENT. PAD SHALL BE 4" MINIMUM IN THICKNESS AND SHALL BE REINFORCED WITH A 6X6-W1.4XW1.4 WWF 1" FROM TOP OF PAD.

SEISMIC NOTES:

1. THE STRUCTURE WAS DESIGNED TO SUSTAIN SEISMIC LOADS IN ACCORDANCE WITH THE REQUIREMENTS OF THE BUILDING CODE OF THE CITY OF NEW YORK.

2. THE BULDING STRUCTURAL OCCUPANCY CATEGORY IS II.

3. SITE CLASS D WILL BE USED IN DETERMINING STRUCTURAL LOADS ON THE BUILDING.

4. SEISMIC LOADS ARE RESISTED BY CONCRETE SHEAR WALLS IN BOTH DIRECTIONS.

5. A MINIMUM SEISMIC SEPARATION OF 2" SHALL BE PROVIDED BETWEEN THIS STRUCTURE AND THE PROPERTY LINE.

SPECIAL INSPECTIONS

1. PRIOR TO BEGINNING ANY WORK, THE OWNER SHALL RETAIN THE SERVICES OF S.E.T. , P.C., OR ANOTHER ACCEPTABLE LICENSED PROFESSIONAL ENGINEER WHO SHALL HAVE PROVEN EXPERIENCE ACCEPTABLE TO THE OWNER AND ARCHITECT. MINIMUM REQUIRED QUALIFICATIONS SHALL INCLUDE A PROFESSIONAL LIABILITY INSURANCE COVERAGE OF 1 MILLION DOLLARS AND A MINIMUM PROVEN EXPERIENCE OF 5 YEARS WITH SIMILAR WORK.

2. SPECIAL AND PROGRESS (CONTROLLED) INSPECTIONS REQUIRED BY THE NYC BUILDING CODE SHALL BE PERFORMED BY A TESTING AGENCY AND / OR PROFESSIONAL ENGINEER RETAINED BY THE OWNER AT NO COST TO THE CONTRACTOR FOR THE FOLLOWING CHECKED ITEMS:

☐ STRUCTURAL STEEL-WELDING	BC 1704.3.1
☐ STRUCTURAL STEEL-ERECTION & BOLTING	BC 1704.3.2 , 1704.3.3
☐ STRUCTURAL COLD-FORMED STEEL	BC 1704.3.4
☒ CONCRETE-CAST-IN-PLACE	BC 1704.4
☒ CONCRETE TEST CYLINDERS	BC 1905.6
☒ CONCRETE DESIGN MIX	BC 1905.3
☐ MASONRY	BC 1704.5
☐ SOILS-SITE PREPARATION	BC 1704.7.1
☐ SOILS-INVESTIGATIONS (BORINGS/TEST PITS)	BC 1704.7.4
☒ PILE FOUNDATIONS & DRILLED PIER INSTALLATION	BC 1704.8
☐ UNDERPINNING	BC 1704.9.1
☐ STRUCTURAL SAFETY-STRUCTURAL STABILITY	BC 1704.19
☐ EXCAVATION-SHEETING, SHORING, & BRACING	BC 1704.19 , BC 3304.4.1
☐ FOOTING AND FOUNDATION	BC 109.3.1
☐ FRAME INSPECTION	BC 109.3.3
☐ FINAL	

THE TESTING AGENCY FOR CONTROLLED INSPECTIONS SHALL FILE ALL APPROPRIATE FORMS WITH THE NEW YORK CITY BUILDINGS DEPARTMENT.

3. THE CONTRACTORS ENGINEER SHALL PREPARE PLANS, CALCULATIONS, AND NOTES IN THE FORM OF SHOP DRAWINGS, FOR ALL ITEMS OF WORK WHICH DIFFER FROM WHAT IS SHOWN ON THE STRUCTURAL DRAWINGS DUE TO FIELD CONDITIONS. HE SHALL ALSO PREPARE PLANS IN THE FORM OF SHOP DRAWINGS, CALCULATIONS AND NOTES FOR ALL TEMPORARY SHORES AND BRACES AND CLEARLY INDICATE METHOD OF INSTALLATION, SEQUENCE OF OPERATIONS, AND QUALITY CONTROL.

4. THESE SHOP DRAWINGS SHALL BE REVIEWED BY THE ENGINEER OF RECORD AND ARCHITECT PRIOR TO CONSTRUCTION. WORK SHALL BE EXECUTED FROM REVIEWED SHOP DRAWINGS ONLY.

5. COPIES OF SUCH DRAWINGS WHICH INCLUDE THE ARCHITECT'S AND ENGINEER'S COMMENTS SHALL BE FILED WITH THE DEPARMENT OF BUILDINGS (ON AMENDMENT FORMS). ADDITIONALLY, AT COMPLETION OF WORK, FORMS INCLUDING ALL INSPECTION REPORTS PREPARED BY THE CONTRACTOR'S ENGINEER SHALL BE FILED WTH THE DEPARTMENT OF BUILDINGS.

6. THE SPECIAL INSPECTIONS ENGINEER SHALL DETERMINE THE FREQUENCY OF INSPECTIONS NEEDED AND WHETHER HE OR SHE SHOULD INSPECT THE SITE PERSONALLY OR SEND A PERSON UNDER HIS OR HER DIRECT SUPERVISION. AT A MINIMUM, THE SITE MUST BE INSPECTED TWICE, ONCE AT A PRE-CONSTRUCTION MEETING WITH THE CONTRACTOR AND ONCE DURING CONSTRUCTION OPERATIONS.

7. THE SPECIAL INSPECTIONS ENGINEER, SHALL MAINTAIN A LOG IN HIS OR HER OFFICE WHICH INCLUDES THE FOLLOWING INFORMATION:

(i) ADDRESS OF THE PREMISES, JOB NUMBER, CONTRACTOR NAME AND ADRESS, AND
(ii) DATE AND TIME OF EACH INSPECTION INCLUDING
   (A) NAMES OF PERSONNEL WHO INSPECTED THE SITE, AND
   (B) ANY SIGNIFICANT OBSERVATIONS OR INSTRUCTIONS GIVEN RELATING TO ANY OF THE FOLLOWING:

   (1) DEVIATIONS FROM THE CONTRACT DOCUMENTS.
   (2) ANTICIPATED FIELD CONDITIONS;
   (3) PROPER EXECUTION OF THE STRUCTURAL WORK;
   (4) GOOD ENGINEERING PRACTICE;
   (5) PRECAUTIONS TAKEN TO MAINTAIN SAFE CONDITIONS IF WORK IS STOPPED FOR ANY REASON.

(iii) THE DATE OF AND PARTICIPANTS IN ANY CONVERSATIONS WITH THE SPECIAL INSPECTIONS ENGINEER OCCURING OFF-SITE AND RELATING TO ANY SIGNIFICANT OBSERVATIONS OR INSTRUCTIONS.

8. THE SPECIAL INSPECTIONS ENGINEER SHALL RETAIN A COPY OF THE DOCUMENTS DESCRIBED ABOVE IN HIS OR HER OFFICE AND SHALL PROVIDE A COPY TO THE CONTRACTOR AND / OR OWNER TO BE KEPT AT THE CONSTRUCTION SITE.

9. THE SPECIAL INSPECTIONS ENGINEER RESPONSIBLE FOR SPECIAL INSPECTION SHALL REPORT UNSAFE CONDITIONS, WHEN AND IF OBSERVED DURING HIS / HER SITE VISITS, TO THE DEPARTMENT OF BUILDINGS AND / OR ANY OTHER AFFECTED PARTIES OR AGENCIES. IT IS TO BE NOTED THAT THE SPECIAL INSPECTIONS ENGINEER AND ENGINEER OF RECORD ARE NOT RESPONSIBLE IN ANY WAY FOR SITE SAFETY. SITE SAFETY SHALL REMAIN THE RESPONSIBILITY OF THE CONTRACTOR.

10. UPON REQUEST OF THE BUILDINGS DEPARTMENT, THE SPECIAL INSPECTIONS ENGINEER SHALL MAKE AVAILABLE FOR REVIEW BY THE BUILDINGS DEPARTMENT DOCUMENTS AND THE LOG DESCRIBED ABOVE.

STRUCTURAL ENGINEERING TECHNOLOGIES, P.C.

CONSULTING STRUCTURAL AND FOUNDATION ENGINEERS

40-12 28TH STREET
LONG ISLAND CITY, NY 11101
T(718)706-7196 F(718)472-4464

ALL RIGHTS RESERVED
ALL DRAWINGS SPECIFICATIONS AND COPIES THEREOF FURNISHED BY S.E.T., P.C. ARE AND WILL REMAIN THEIR PROPERTY. THEY ARE NOT TO BE USED ON THIS OR ANY OTHER PROJECT UNLESS WRITTEN PERMISSION IS GIVEN.

OWNER:

NOTE:
STRUCTURAL ENGINEERING TECHNOLOGIES, P.C. HAS NOT BEEN RETAINED TO PERFORM CONTROLLED INSPECTIONS OF ANY KIND FOR THIS PROJECT.

NO.	DATE:	DESCRIPTION

REVISONS:

FILINGS:

PROJECT

526 UNION AVENUE
BROOKLYN, N.Y. 11211

FACADE RENOVATION AND BROWNSTONE REPAIR

DRAWING TITLE:

GENERAL NOTES

SEAL & SIGNATURE

STATE OF NEW YORK · GEORGE J. CAMBRONNE · No. 061234-1 · LICENSED PROFESSIONAL ENGINEER

DATE:	09-23-14
PROJECT NO:	
SCALE:	AS NOTED
DRAWING BY:	M.M.
CHECKED BY:	G.J.C.
DWG NO:	S-401.00
SHEET NO:	OF

BSCAN STICKER

DOB APPROVAL STAMP

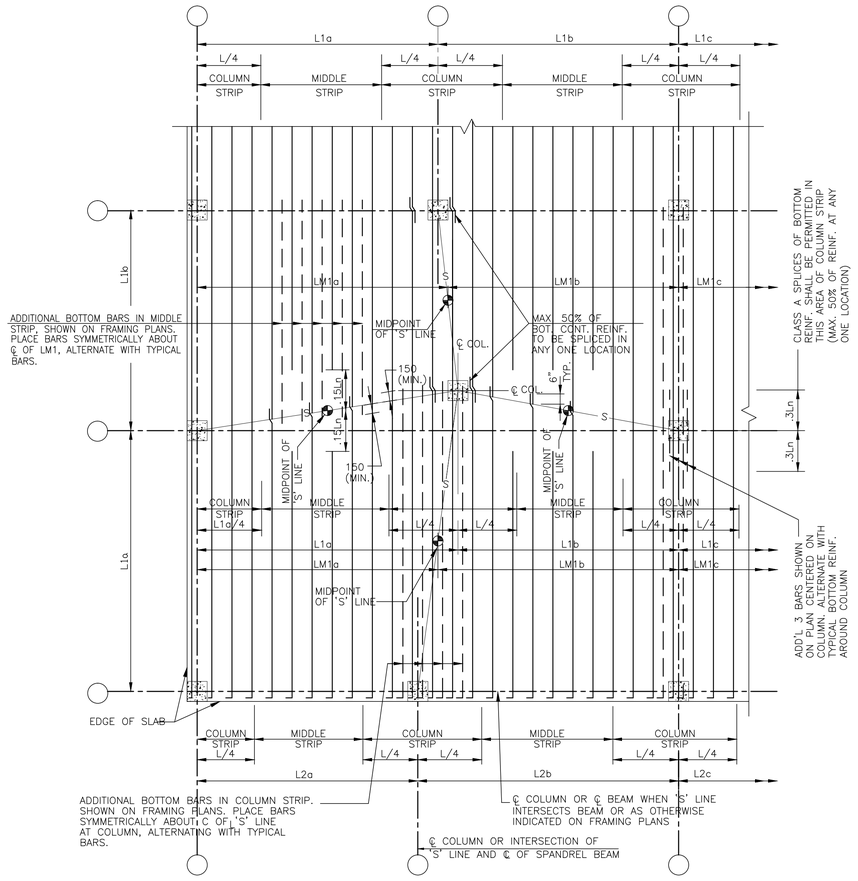

01
SCALE: NTS

BOTTOM BAR PLACEMENT FOR FLAT SLAB CONSTRUCTION

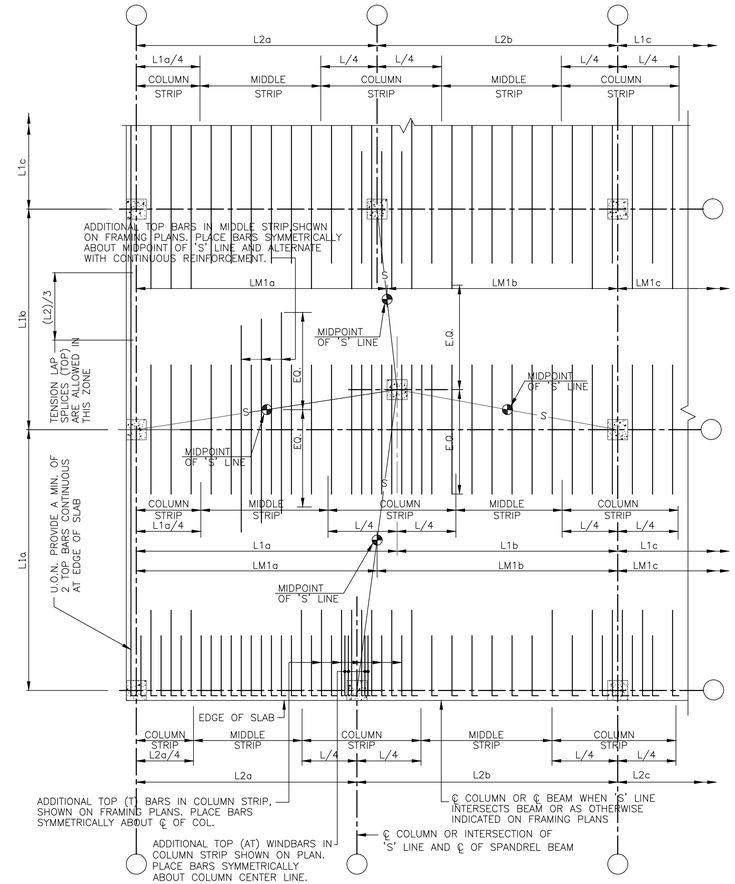

02
SCALE: NTS

TOP BAR PLACEMENT FOR FLAT SLAB CONSTRUCTION

1. ———— INDICATES TYPICAL TOP OR BOTTOM AND ADD'L TOP REINF. CALLED FOR ON FRAMING PLAN.
2. — — — — INDICATES ADD'L BOTTOM REINF. CALLED FOR ON FRAMING PLAN.
3. 50% OR MORE OF ADD'L BOTTOM REINFORCEMENT SHALL BE CONTINUOUS THROUGHOUT.
4. PLACE BOTTOM & TOP BARS IN THE EAST– WEST DIRECTION OF THE BUILDING IN THE OUTERMOST LAYERS, EXCEPT AS OTHERWISE NOTED.
5. PLACE BOTTOM & TOP REINF. IN THE NORTH– SOUTH DIRECTION OF THE BUILDING IN THE INNERMOST LAYERS, EXCEPT AS OTHERWISE NOTED.
6. BARS MARKED 'T' ARE TOP BARS, BARS MARKED 'B' ARE BOTTOM BARS.
7. SPANS (LC & LM) SHOWN ARE FOR DETERMINING WIDTH OF COLUMN & MIDDLE STRIPS & LENGTHS OF BARS. LC AND LM ARE THE LONGEST OF TWO ADJACENT SPANS.
8. BOTTOM REINFORCEMENT SPLICES WHERE REQUIRED SHALL BE CENTERED ON COL. ℄ , BM. ℄ OR 'S' LINE – 50% OF BOTTOM MIDDLE STRIP REINFORCEMENT MAY BE INTERRUPTED .15Ln FROM COLUMN LINE OR 'S' LINE.
9. 'S' LINES ARE OMITTED ON PLANS WHEN COLUMNS ALIGN ON A REGULAR GRID PATTERN AND THE 'S' LINES COINCIDE WITH COLUMN CENTER LINES.
10. BEAMS LOCATED IN FLAT SLAB AREAS SHALL BE CONSIDERED AS 'S' LINES FOR THE PURPOSE OF PLACEMENT OF REINFORCEMENT.
11. FOR SCHEDULE OF MINIMUM EMBEDMENT AND LAP SPLICE LENGTHS SEE DWG. S–403.
12. ALTERNATE CONT. & ADD'L. BARS WHEN NOT OTHERWISE INDICATED.
13. DROP PANELS SHALL BE PROVIDED ONLY WHEN INDICATED ON FRAMING PLANS OR BY NOTES.
14. AT LEAST TWO BARS IN EACH DIRECTION, TOP AND BOT., SHALL PASS WITHIN THE COLUMN CORE.
15. Ln IS THE CLEAR SPANS IN THE DIRECTION OF THE REINFORCING.
16. L IS THE LESSER OF L1 (IN THE DIRECTION OF THE SPAN) OR L2 (IN A DIRECTION PERPENDICULAR TO THE SPAN).

03
SCALE: NTS

BAR PLACEMENT NOTES

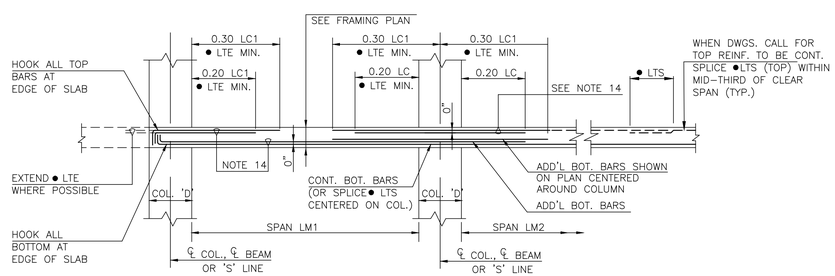

04
SCALE: NTS

COLUMN STRIP WITHOUT DROP PANELS

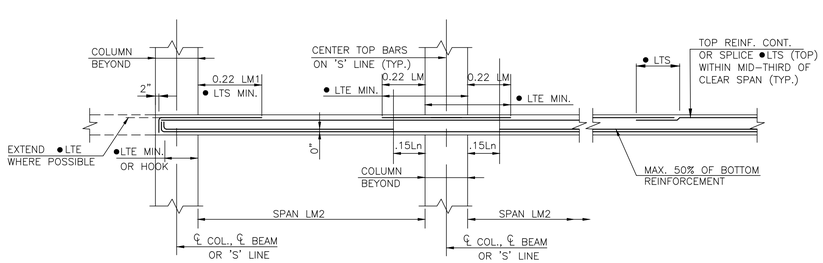

05
SCALE: NTS

MIDDLE STIP

STRUCTURAL ENGINEERING TECHNOLOGIES, P.C.

CONSULTING STRUCTURAL AND FOUNDATION ENGINEERS

40-12 28TH STREET
LONG ISLAND CITY, NY 11101
T(718)706-7196 F(718)472-4464

ALL RIGHTS RESERVED
ALL DRAWINGS SPECIFICATIONS AND COPIES THEREOF FURNISHED BY S.E.T., P.C. ARE AND WILL REMAIN THEIR PROPERTY. THEY ARE NOT TO BE USED ON THIS OR ANY OTHER PROJECT UNLESS WRITTEN PERMISSION IS GIVEN.

OWNER:

NOTE:
STRUCTURAL ENGINEERING TECHNOLOGIES, P.C. HAS NOT BEEN RETAINED TO PERFORM CONTROLLED INSPECTIONS OF ANY KIND FOR THIS PROJECT.

NO.	DATE:	DESCRIPTION

REVISONS:

FILINGS:

PROJECT

526 UNION AVENUE
BROOKLYN, N.Y. 11211

FACADE RENOVATION AND BROWNSTONE REPAIR

DRAWING TITLE:

TYPICAL DETAILS

SEAL & SIGNATURE

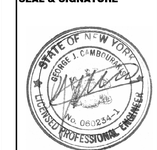

DATE:	09-23-14
PROJECT NO:	
SCALE:	AS NOTED
DRAWING BY:	M.M.
CHECKED BY:	G.J.C.
DWG NO:	**S-402.00**
SHEET NO:	OF

BSCAN STICKER

DOB APPROVAL STAMP

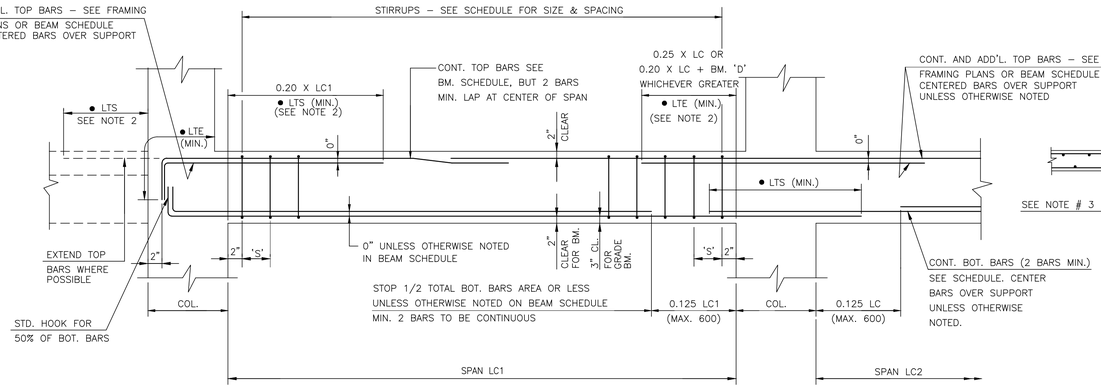

ELEVATION

(LC= LONGER OF TWO ADJACENT SPANS LC1 OR LC2)

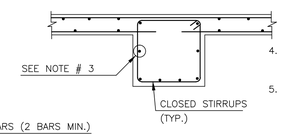

SECTION

NOTES:

1. UPTURNED BEAMS MUST BE PLACED MONOLITHICALLY FOR FULL TOTAL DEPTH OF BEAMS. COLUMNS SUPPORTING UPTURNED BEAMS MUST BE POURED MONOLITHICALLY WITH BEAMS FOR FULL TOTAL DEPTH OF BEAMS.
2. SEE "SCHEDULE OF EMBEDMENT & LAP SPLICE LENGTHS" ON DWG. S/403.
3. PROVIDE #5 @ 12"O.C. HORIZONTAL BARS AT EACH VERTICAL FACE FOR BEAMS 24" OR MORE IN DEPTH UNLESS OTHERWISE NOTED IN SECTIONS.
4. ALL HOOKS ON STIRRUPS TO BE SEISMIC HOOKS.
5. THIS DETAIL ALSO APPLIES TO GRADE BEAMS UNLESS OTHERWISE NOTED ON PLANS AND DETAILS.
6. AT ALL BEAM–TO–GIRDER INTERSECTIONS, PLACE GIRIDER REINFORCING OUTSIDE THE REINFORCING FOR BEAM. (GIRDER IS A BEAM SUPPORTING OTHER BEAMS).
7. MULTIPLE LAYERS OF BARS ARE SHOWN ON BEAM SCHEDULE AS (A+B+C), WHERE A– INDICATES NUMBER OF BARS IN 1st (OUTER) LAYER, B– INDICATES NUMBER OF BARS IN 2nd LAYER, C– IN 3rd, ETC..

01 SCALE: NTS — CONCRETE BEAM

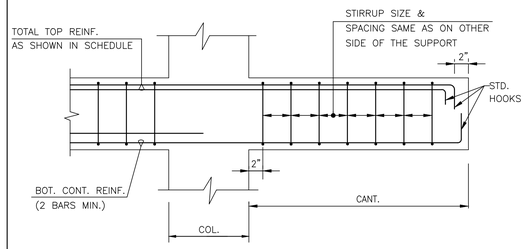

02 SCALE: NTS — CONRETE BEAM WITH CANTILEVER

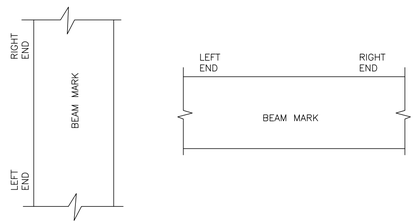

03 SCALE: NTS — DEFINITION OF CONRETE BEAM ORIENTATION

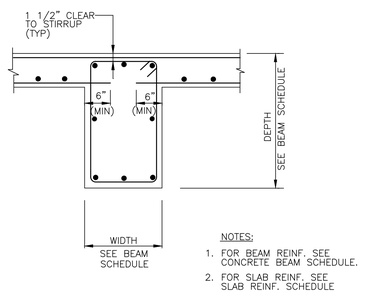

NOTES:

1. FOR BEAM REINF. SEE CONCRETE BEAM SCHEDULE.
2. FOR SLAB REINF. SEE SLAB REINF. SCHEDULE

04 SCALE: NTS — CONCRETE BEAM SUPPORTING ONE WAY CONCRETE SLAB

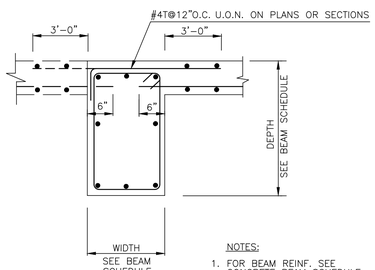

NOTES:

1. FOR BEAM REINF. SEE CONCRETE BEAM SCHEDULE.
2. FOR SLAB REINF. SEE SLAB REINF. SCHEDULE

05 SCALE: NTS — CONCRETE BEAM PARALLEL TO ONE WAY CONCRETE SLAB

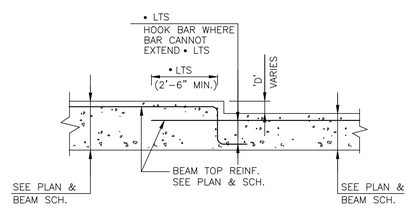

STEP AT TOP

(FOR 'D' GREATER THAN 2" MM)

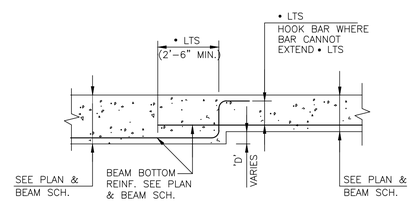

STEP AT BOTTOM

06 SCALE: NTS — STEPS IN BEAM

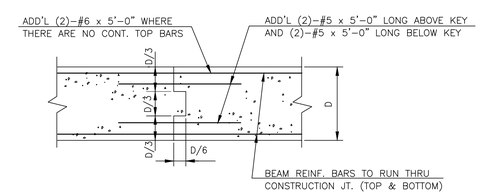

07 SCALE: NTS — CONSTRUCTION JOINT

STRUCTURAL ENGINEERING TECHNOLOGIES, P.C.

CONSULTING STRUCTURAL AND FOUNDATION ENGINEERS

40-12 28TH STREET
LONG ISLAND CITY, NY 11101
T(718)706-7196 F(718)472-4464

ALL RIGHTS RESERVED
ALL DRAWINGS SPECIFICATIONS AND COPIES THEREOF FURNISHED BY S.E.T., P.C. ARE AND WILL REMAIN THEIR PROPERTY. THEY ARE NOT TO BE USED ON THIS OR ANY OTHER PROJECT UNLESS WRITTEN PERMISSION IS GIVEN.

OWNER:

NOTE:
STRUCTURAL ENGINEERING TECHNOLOGIES, P.C. HAS NOT BEEN RETAINED TO PERFORM CONTROLLED INSPECTIONS OF ANY KIND FOR THIS PROJECT.

NO.	DATE:	DESCRIPTION

REVISONS:

FILINGS:

PROJECT

526 UNION AVENUE
BROOKLYN, N.Y. 11211

FACADE RENOVATION AND BROWNSTONE REPAIR

DRAWING TITLE:

TYPICAL DETAILS

SEAL & SIGNATURE

STATE OF NEW YORK — GEORGE J. CAMBRIDGE — No. 060264 — LICENSED PROFESSIONAL ENGINEER

DATE:	09-23-14
PROJECT NO:	
SCALE:	AS NOTED
DRAWING BY:	M.M.
CHECKED BY:	G.J.C.
DWG NO:	S-404.00
SHEET NO:	OF

BSCAN STICKER

DOB APPROVAL STAMP

APPENDIX B

GEOTECHNICAL REPORT

Creative Environment Solutions Corp.
39 West 37th Street, 14th Floor, New York, NY 10018
Phone: 212.290.6323 Fax: 212.290.6325
LICENSED & APPROVED by NYS DOH/DOL/DOS, NYC DOB/DEP, FDNY, PIE
WBE Certified
www.CEScenter.com

GEOTECHNICAL INVESTIGATION REPORT

Site Location:

Private Building
526 Union Avenue
Brooklyn, New York 11211

Prepared for:

Tryad Group
250 Greenpoint Avenue; Suite #4
Brooklyn, New York 11222

Prepared by:

Creative Environment Solutions Corp.
39 West 37th Street; 14th Floor
New York, New York 10018

September 28, 2015

Creative Environment Solutions Corp.
39 West 37th Street | 14th Floor | New York, NY 10018 | T: 212.290.6323 | F: 212.290.6325
www.CEScenter.com | WBE Certified

September 28, 2015

Adam Westreich
Vice President
Tryad Group
250 Greenpoint Avenue; Suite #4
Brooklyn, New York 11222
Phone: (718) 308-0008
Email: Adam@TryadGroup.com

RE: Code Compliance Services
Subsurface Geotechnical Investigation
Private Building; 526 Union Avenue, Brooklyn, New York 11211
CES Project # 15-08.376

Dear Mr. Westreich,

As per your request, Creative Environment Solutions Corporation (CES) performed the Code Compliance Services as detailed herewith:

Executive Summary:

CES was procured by KUPOINT (USA) Corp., to perform a Geotechnical Investigation, relevant to proposed construction activities at the Foundation Level of the above-referenced location. The findings resulting from this investigation conclude that the current geotechnical strata will require a deep foundation system consisting of drilled concrete friction piles or cassions.

Please refer to the attached Inspection Reports for details regarding the inspection conducted on August 28, 2015.

Limitations and Conditions:

The information contained in this report was prepared based upon specific parameters and regulations in force at the time of this report. The information herein is only for the specific use of the client and CES. CES accepts no responsibility for the use, interpretation, or reliance by other parties on the information contained herein, unless written authorization has been obtained from CES.

Thank you for your attention and consideration in this matter. Please feel free to contact the undersigned should you have any questions or require any additional information.

Respectfully,

Michael J. Rattacasa
Operations Director

ENCL:

ENGINEERING, PLLC

990 Westbury Road, Suite 101, Westbury, NY 11590 • Tel: (516) 586-8047 • Fax: (516) 586-8049

REPORT OF GEOTECHNICAL INVESTIGATION

PROJECT

526 Union Avenue, Brooklyn NY 11211

PREPARED FOR

Mr. Michael Rattacasa
Operations Director
CES Corp.

DATE

September 28, 2015

During August 25th to August 28th 2015, a geotechnical investigation was performed on behalf of Mr. Michael Rattacasa at the aforementioned location. The purpose is to issue an assessment report based on the geotechnical investigation and to provide recommendations based on it.

ENGINEERING, PLLC

990 Westbury Road, Suite 101, Westbury, NY 11590 • Tel: (516) 586-8047 • Fax: (516) 586-8049

TABLE OF CONTENTS

INFORMATION PROVIDED BY THE BENEFACTORS OF THIS REPORT AND RESEARCH 3
OBSERVATIONS AND SUMMARY OF FINDINGS 4
CONCLUSIONS AND RECOMMENDATIONS 10
FIGURE 1 16
ENGINEER'S CERTIFICATION 17
NOTE 18
APPENDIX A 19

ENGINEERING, PLLC

990 Westbury Road, Suite 101, Westbury, NY 11590 • Tel: (516) 586-8047 • Fax: (516) 586-8049

INFORMATION PROVIDED BY THE BENEFACTORS OF THIS REPORT AND RESEARCH

Mr. Michael Rattacasa from CES Corp. issued authorization to PSI Engineering (PSI) to perform a geotechnical investigation on this site, relevant to the construction of a new proposed foundation system for a new structure including cellar level.

According to the New York City Department of Buildings (NYCDOB), the aforementioned location belongs to lot 3 within tax block 2741 and registered one Certificates of Occupancy (CO).

The aforementioned property shows a latest (CO) numbered 98192 and dated as 9-27-1940. The CO describes an existing frame for the use of an Scrap Iron and Metal Yard.

Additionally, the CO reports the structure as 1 story with no cellar, which includes industrial and manufacturing equipment.

The current information shows on the New York City Official Map the following:

Lot Area: 10,000 sf
Lot Frontage: 100'

Lot Depth: 100'
Year Built: N/A
Number of Buildings: 1
Number of Floors: 3
Gross Floor Area: 10,000 sf (estimated)
Residential Units:0**Total # of Units:** 0
Zoning: M1-2/R6A
Commercial Overlay: None
Zoning Map #: 13a

Client has informed PSI that Architectural progress drawings dated as 8-25-15 and generated by DJLU Architect are available and based on that information PSI assumes an expected critical load of approximately 700 kips on a typical interior column. The assumption reflects a factored load.

Note: *PSI Engineering does not certify the information provided in this page which only intends only to provide guidance to the benefactors of this information.*

ENGINEERING, PLLC

990 Westbury Road, Suite 101, Westbury, NY 11590 • Tel: (516) 586-8047 • Fax: (516) 586-8049

OBSERVATIONS AND SUMMARY OF FINDINGS

PSI has completed an exploration and evaluation of the subsurface conditions for the proposed new structure at the aforementioned location.

Boring Location Plan included as Figure 1.

At the time of PSI's exploration, the subject site consisted of a concrete slab under approximately 1'-6" of a mixture of gravel and consolidated sand. The subject site was observed being used as a permanent and temporary parking lot.

Field exploration of the project site was conducted by means of 3 soil test borings (identified as B-1 through B-3) performed within accessible locations at the subject site. The soil borings were performed with a truck-mounted geoprobe drill rig using hollow stem augers and split-spoon sampling techniques.

Soil borings were backfilled to the surface with grout or soils generated during the investigation upon completion and patched with Portland cement concrete, where appropriate and as necessary. The locations of the soil borings are shown on the accompanying *Boring Location Plan* included as Figure 1.

The soil borings were conducted in the presence of a PSI engineer who performed field tests, recorded visual classifications, and collected samples of the various strata encountered. The borings were located in the field using normal taping procedures and estimated right angles from existing structures. These locations are presumed to be accurate within a few feet.

Soil borings and Standard Penetration Tests (SPTs) were conducted in general accordance with American Society for Testing and Materials (ASTM) designation D 1586. The SPT resistance value (N) can be used as an indicator of the consistency of fine-grained soils and the relative density of coarse-grained soils. The N-value for various soil types can be correlated with the engineering behavior of earthworks and foundations. No rock stratum was sampled using a NX-sized diamond bit. No rock core description recovery was possible at the time of the boring operations; therefore, Rock Quality Designation (RQD), and other pertinent information could not be recorded on the boring logs. Refer to Appendix A on the *Records of Subsurface Exploration*.

Groundwater level observations, if encountered, were recorded during and immediately after the completion of field operations prior to backfilling the borings. Seasonal variations, temperature effects, man-made effects, and recent snow/rainfall conditions may influence the levels of the groundwater, and the observed levels will depend on the permeability of the soils. Groundwater elevations derived from sources other than seasonally observed groundwater monitor wells may not be representative of true groundwater levels.

The subsurface exploration included performing a reconnaissance of the project site and drilling soil boring. The data from this exploration was analyzed by PSI in light of the project information provided by the Client.

A summary of PSI's findings and recommendations is presented as follows:

ENGINEERING, PLLC

990 Westbury Road, Suite 101, Westbury, NY 11590 • Tel: (516) 586-8047 • Fax: (516) 586-8049

SUBSURFACE CONDITIONS:

The soil boring was performed within existing layer of 6" gravel and consolidated sand on top of 6" to 11" of asphalt, on top of an approximately 8" slab on grade within the available space. For any purpose the elevation to start the soil investigation is immediately below the concrete slab on grade.

BORING NUMBER: B-1

Stratum 1:

This stratum lies directly below the existing slab on grade or a presumably artificial formation that included rock, marble and metal pieces. This stratum consists in black medium to fine gravels; black course to fine poorly graded sands with traces of brick, ashes, grease, oil and presented wet conditions. (GROUP SP-GP CLASS 2a or 3a). This stratum presented a strong oily odor and goes to an approximately 5 feet deep. Based on the N-Value and soil allowable load bearing guidelines observed on the New York City Building Code, Section 1804.1, this stratum presents an allowable bearing capacity of 6 Tons per Square Feet (SQFT); however, due to the encountered contaminant agents, it may be categorized as "Nominally Unsatisfactory Bearing Material".

Stratum 2:

This stratum lies directly below the existing stratum 1 approximately from 5 feet deep to 10 feet deep and consists in dark brown medium to fine sands with traces of silt, clay and medium to fine gravels. This stratum presented wet conditions. (GROUP SP CLASS 6). Based on the N-Value and soil allowable load bearing guidelines observed on the New York City Building Code, Section 1804.1, this stratum may be categorized as "Nominally Unsatisfactory Bearing Material".

Stratum 3:

This stratum lies directly below the existing stratum 2 approximately from 10 feet deep to 15 feet deep and consists in dark brown medium to fine sands with traces of gravel. This stratum presented wet conditions. (GROUP SP CLASS 6). Based on the N-Value and soil allowable load bearing guidelines observed on the New York City Building Code, Section 1804.1, this stratum may be categorized as "Nominally Unsatisfactory Bearing Material".

Stratum 4:

This stratum lies directly below the existing stratum 3 approximately from 15 feet to 19 feet deep and presented full refusal of the available equipment under the aforementioned ASTM standards. A presumably large natural formation (boulder) impeded further prospection.

BORING NUMBER: B-2

Stratum 1:

This stratum lies directly below the existing slab on grade or a presumably artificial formation that included rock, marble and metal pieces. This stratum consists in black course to fine gravels; black medium to fine sands with traces of brick, ashes, grease, oil and presented wet conditions. (GROUP SP-GP CLASS 2b or 3b). This stratum presented a strong oily odor and goes to an approximately 5 feet deep. Based on the N-Value and soil allowable load bearing guidelines observed on the New York City Building Code, Section 1804.1, this stratum presents an allowable bearing capacity of 3 Tons per Square Feet (SQFT); however, due to the encountered contaminant agents, it may be categorized as "Nominally Unsatisfactory Bearing Material".

Stratum 2:

This stratum lies directly below the existing stratum 1 approximately from 5 feet deep to 10 feet deep and consists in dark brown and black medium to fine sands with traces of silt, clay, oil and presented wet conditions. (GROUP SP CLASS 6). Based on the N-Value and soil allowable load bearing guidelines observed on the New York City Building Code, Section 1804.1, this stratum may be categorized as "Nominally Unsatisfactory Bearing Material".

Stratum 3:

This stratum lies directly below the existing stratum 2 approximately from 10 feet deep to 15 feet deep and consists in dark brown and black medium to fine sands with traces of silt, clay, oil and presented wet conditions. (GROUP SP CLASS 6). Based on the N-Value and soil allowable load bearing guidelines observed on the New York City Building Code, Section 1804.1, this stratum may be categorized as "Nominally Unsatisfactory Bearing Material".

Stratum 4:

This stratum lies directly below the existing stratum 3 approximately from 15 feet deep to 20 feet deep and consists in grey clay with traces of organic fragments and presented wet conditions. (GROUP ML-MH). Based on the N-Value and soil allowable load bearing guidelines observed on the New York City Building Code, Section 1804.1, this stratum may be categorized as "Nominally Unsatisfactory Bearing Material".

Stratum 5:

This stratum lies directly below the existing stratum 4 approximately from 20 feet deep to 22 feet deep and consists in dark brown medium to fine sands with traces of silt, clay, gravel and presented wet conditions. (GROUP SP). This stratum lies directly below the existing stratum 3 approximately from 15 feet deep and presented full refusal of the available equipment under the aforementioned ASTM standards.

BORING NUMBER: B-3

Stratum 1:

This stratum lies directly below the existing slab on grade or a presumably artificial formation that included rock, marble and metal pieces. This stratum consists in black course to fine gravels; course to fine sands, top soil with traces of brick, grease, oil and presented wet conditions. (GROUP SP-GP CLASS 2b or 3b). This stratum presented a strong oily odor and goes to an approximately 5 feet deep. Based on the N-Value and soil allowable load bearing guidelines observed on the New York City Building Code, Section 1804.1, this stratum presents an allowable bearing capacity of 3 Tons per Square Feet (SQFT); however, due to the encountered contaminant agents, it may be categorized as "Nominally Unsatisfactory Bearing Material".

Stratum 2:

This stratum lies directly below the existing stratum 1 approximately from 5 feet deep to 10 feet deep and consists in dark brown and black medium to fine sands with traces of silt, clay, gravel and presented wet conditions. (GROUP SP CLASS 6). Based on the N-Value and soil allowable load bearing guidelines observed on the New York City Building Code, Section 1804.1, this stratum may be categorized as "Nominally Unsatisfactory Bearing Material".

Stratum 3:

This stratum lies directly below the existing stratum 2 approximately from 10 feet deep to 15 feet deep and consists in dark brown and black medium to fine sands with traces of silt, clay, fine gravel and presented wet conditions. (GROUP SP CLASS 6). Based on the N-Value and soil allowable load bearing guidelines observed on the New York City Building Code, Section 1804.1, this stratum may be categorized as "Nominally Unsatisfactory Bearing Material".

Stratum 4:

This stratum lies directly below the existing stratum 3 approximately from 15 feet deep to 20 feet deep and consists in grey clay with traces of organic fragments and presented wet conditions. (GROUP ML-MH). Based on the N-Value and soil allowable load bearing guidelines observed on the New York City Building Code, Section 1804.1, this stratum may be categorized as "Nominally Unsatisfactory Bearing Material".

Stratum 5:

This stratum lies directly below the existing stratum 4 approximately from 20 feet deep to 25 feet deep and consists in dark brown medium to fine sands with traces of silt, clay, brick, course to fine gravel and presented wet conditions. (GROUP SP CLASS 2b). Based on the N-Value and soil allowable load bearing guidelines observed on the New York City Building Code, Section 1804.1, this stratum presents an allowable bearing capacity of 3 Tons per Square Feet (SQFT).

Stratum 6:

This stratum lies directly below the existing stratum 5 approximately from 25 feet deep to 28 feet deep and consists in dark brown medium to fine sands with traces of silt, clay, gravel and presented wet conditions. (GROUP SP CLASS 6). Based on the N-Value and soil allowable load bearing guidelines observed on the New York City Building Code, Section 1804.1, this stratum may be categorized as "Nominally Unsatisfactory Bearing Material".

ENGINEERING, PLLC

990 Westbury Road, Suite 101, Westbury, NY 11590 • Tel: (516) 586-8047 • Fax: (516) 586-8049

CONCLUSIONS AND RECOMMENDATIONS

❖ Foundations and Floor Slabs:

Due to the location of the proposed building and adjacent subway structure (MTA G line) located below Union Avenue, the proposed building is required to be supported on a deep foundation system and structural floor slab. PSI recommends supporting the proposed structure on drilled concrete friction piles and a structural floor slab in order to limit the vibrations caused by deep pile installation and preclude new loads from impacting the existing subway structure.

Unless otherwise noted by the Structural Engineer of Records (EOR) for this project, it is PSI professional opinion that the current soil characteristics observed in this report are suitable to place the structural proposed loads for the new proposed structure by following to aforementioned suggested deep foundation system.

❖ Shoring / Adjacent Structures:

Due to the close proximity of the proposed building footprint to surrounding existing New York City public sidewalks and adjacent structures, a temporary shoring system will be necessary during construction of the below grade structures associated with the proposed development. Precautions must be made to maintain the structural stability of the adjacent building walls and foundations and retaining walls prior to and during demolition/construction of the proposed building. PSI recommends a pre-construction and post-construction survey of the structures adjacent to the proposed development. These surveys should include documentation, photographs and/or videotapes of the existing conditions of the adjacent structures prior to construction activities at the subject site and a comparison to a post-construction survey should be performed to determine possible construction impacted settlements and/or damage to the adjacent structures. These surveys should be conducted to monitor the potential progression of building cracks and the existing pavement condition/distress along the NYC sidewalk and pavement areas.

❖ Excavation Difficulties:

PSI anticipates that several excavation difficulties due to the natural characteristics of the soils and the existing artificial formation (asphalt and slab) immediately below the reported 6" of gravel and over consolidated slab. Additionally, precautions to retain the slopes will be necessary by using shoring and sheeting means and methods.

❖ Groundwater Control:

Static groundwater was encountered within at least one boring at the depth and elevation of approximately 7 feet below the existing floor slab. As recommended, if additional excavations are required, PSI anticipates that static groundwater will be within planned excavations. As such, construction phase dewatering primarily is anticipated to consist of removing surface water runoff, infiltrating water, or trapped water at this site. Additional dewatering may be required during wet seasons such as the use of sumps. Minor dewatering of surface runoff, infiltrating water or trapped water typically may be controlled by providing a sufficient number of sump pumps at the base of the excavations.

❖ Subgrade Protection and Inspection:

Every effort should be made to minimize disturbance of the on-site soils by construction traffic and surface runoff. The on-site soils, particularly the finer-grained soils anticipated at or proposed excavation levels near the basement subgrade level, may deteriorate when subjected to repeated construction traffic and may require removal and replacement. These materials also may require wetting and compaction during dry periods or discing, drying and aeration during wet periods. The contractor should be responsible for protection of subgrades and minimization of exposure of the site soils to precipitation by covering stockpiles and subgrades with plastic and preventing ponding of water by sealing subgrades before precipitation events and grading the site to allow proper drainage of surface water. All rutting from construction equipment should be removed prior to any forecasted or actual precipitation. The services of the geotechnical engineer should be retained to inspect soils conditions during construction and verify the suitability of prepared foundation and floor slab subgrades for support of design loads.

❖ On-Site Material:

PSI anticipates that a suitable portion of the existing fill materials (Stratum 3) and underlying natural residual materials (Stratum 4) may be reusable as structural fill and/or backfill below the proposed building provided that any deleterious materials, oversized, and/or objectionable debris encountered are segregated and moisture contents are controlled within two percent of the optimum moisture content. Reuse of the finer-grained site soils may require mixing with a granular material, moisture conditioning, and/or drying to facilitate their reuse, workability, and compaction in fill areas. Reuse of the existing fill materials will be contingent on careful inspection in the field by the owner's geotechnical engineer by visual observation and/or test pit excavations during construction as

recommended herein. These materials will become increasingly difficult to reuse and compact if they become wetted beyond the optimum moisture content or to dry. Materials that become exceedingly wet will likely require discing and aerating.
Cobble and boulder-sized weathered rock/bedrock fragments, or similarly sized materials greater than three inches in diameter will need to be separated from on-site soils to be placed as structural fill or backfill. Cobble or boulder-sized fragments between three inches to 12 inches may be crushed or individually placed in structural fill or backfill layers deeper than two feet below proposed foundation subgraded levels. Care must be taken to individually seat any large particles and to compact soil around large particles with hand operated equipment to minimize risk of void formation. Any stripped surface cover materials, including topsoil, should not be used as general fill or backfill.

- **Demolition Material:**

Durable demolition material free of environmental concerns may be used as fill material provided the material is properly segregated and processed as recommended herein. Concrete masonry materials should be crushed to a well graded blend with a maximum size of three inches in diameter. The asphaltic materials and deleterious building materials such as wood, insulation, metal, shingles, etc. should not be used as general structural fill material.

- **Compaction and Placement Requirements:**

All structural fill and backfill should be placed in maximum nine-inch loose lifts and compacted to 95 percent of the maximum dry density within two percent of the optimum moisture content as determined by ASTM D 1557 (Modified Proctor). PSI recommends using a vibratory drum roller to compact the on-site soils or a small hand-held vibratory compactor within excavations. Particular attention should be brought to the backfill following demolition and removal of the foundations of the existing building and below ground underground storage tanks associated with the existing site gasoline service station.

- **Structural Fill Testing:**

A sample of the imported fill material or any on-site material proposed for reuse as structural fill or backfill should be submitted to the geotechnical engineer for analysis and approval at least one week prior to its use. The placement of all fill and backfill should be monitored by a qualified engineering technician to ensure that the specified material and lift thicknesses are properly installed. A sufficient number of in-place density tests should be performed to ensure that the specified compaction is achieved throughout the height of the fill or backfill.

Recommendations:

PSI strongly recommends taking in consideration the characteristics of the observed material for excavation purposes which relates to the limitations of excavation and correspondent sheeting and shoring applications.

The following statements shall be taken for designing purposes:

1. Allowable soil bearing pressure -- The sub-grade soil research reflected in the subject report notifies a suggested allowable soil bearing capacity of six (6), three (3) tons per Square Foot (SF) in some cases and Nominally Unsatisfactory Bearing Materials in other cases. [Reference New York City Building Code]. Additional the encountered soil characteristics present a suitable bearing material for the proposed structure by using deep foundation systems. It is understood that there are additional considerations applicable to the subject soil, such as; safety factors, load/time consolidation, and etcetera. For instance, assuming a group of 4 piles, a theoretical load of 700 kilo pounds (Kips), gravity directed and with no eccentricity, will require individual friction piles with 350 kips design (175 Tons) assuming a safety factor of 2 or a safety factor considered by the Design Engineer of Records as per correspondent codes, applicable standards and professional criteria.

2. Influence line- excavation side slopes -- Based on the soil characteristics at the site and with the professional experience obtained interfacing with soils of this type, a predictable regular settlement behavior of the subject soils after service loads are predicted. However, for excavation purposes, unstable slopes are anticipated. As such, Support of Excavation (SOE) Design Drawings, Means and Methods applicable for the proposed structure are strongly recommended during excavation activities.

3. Permanent basement walls – static earth pressures at rest -- Based on the information provided by the soil research conducted at the site; our professional recommendation is for the use of 133 pounds per square foot density for any soils static, active or passive pressures related to the vertical pressures associated with the proposed scope. As such, SOE drawings will be required.

4. Seismic considerations -- Based on the material, including the presence of fines and the blow counts encountered at the boring locations, it is our professional opinion that the soil class can be categorized as "Category D". In addition, in our professional experience and in conformance with New York City Building Code, that the proposed structure is under the Category II "Standard Occupancy" for which the correspondent factor is 1.0 and the correspondent seismic factors will

be 1,000 ≤ Su ≤ 2,000 soil undrained shear strength (psf) with a correspondent Soil Shear Wave Velocity of 600 ≤ Vs ≤ 1,200 (ft/sec).

In addition, it is our professional opinion that for underpinning of adjacent structures a relatively rigid braced temporary support wall shall be required if the adjacent footings are located above an influence line drawn at an upward angle of forty-five degrees (45°) from the bottom of the proposed excavation. The underpinning should extend to twelve (12) inches, at a minimum, below the depth of the proposed foundation subgrade. As previously noted, allowable bearing values may be used for design of the underpinning exercise. The underpinning design should consider the lateral earth pressures and the lateral stresses caused by the building surcharge. The open excavation side slopes should be no steeper than 1 : 1 % **(V:H).** Additionally, all temporary slopes should be protected from erosion. In circumstances where space is limited, the installation of a soldier pile and lagging temporary retaining system should be performed. The lagging boards should be spaced or louvered sufficiently to allow relief of water pressures that could be caused by storm water. The spaces should be filled with relatively free draining filter material such as ultraviolet (UV)-resistant nonwoven geotextile. Soldier piles within thirty-five (35) feet of adjacent structures should be installed in pre-drilled holes and backfilled with cement grout or concrete in order to minimize vibrations that could cause settlement of adjacent streets and structures. Cantilevered or single braced walls may be designed using active earth pressures calculated using a soil unit weight and friction angle of 130 pounds per cubic foot (lbs/ft^3) and 30°, respectively. Multiple braced walls and bracing should be designed using a rectangular earth pressure diagram with intensity equal to 0.65 x the maximum calculated active pressure. In relation to the pressure at the basement walls, the utilization of the following is recommended:

1. For static pressures at rest, the design of the walls may use a lateral triangular distribution at a rate of sixty (60) pounds per square foot per foot (lbs/ft^2/ft) assuming no saturation and ninety (90) lbs/ft^2/ft under saturation.
2. For active pressures, the design of the walls may use a lateral triangular distribution at a rate of forty-five (45) lbs/ft^2/ft assuming no saturation and eighty-five lbs/ft^2/ft under saturation.

SPECIAL CONSIDERATIONS FOR DEEP FOUNDATIONS

General: Due to the location of the proposed building and the adjacent underground subway structure within Union Avenue, PSI recommends the proposed building be supported on a foundation system that does not impose additional pressures on the existing subway structure or impart excessive temporary vibrations on the existing subway structure during installation. As such, PSI recommends that the

proposed building be supported on a deep foundation system consisting of drilled concrete friction piles or caissons.

Drilled Friction Pile Foundation Recommendations: An allowable friction capacity of 175 tons per pile is recommended for drilled concrete piles based on diameters of 12 inches and 36 inches, respectively, that bear within the underlying weathered rock as provided in the chart below. The drilled piles should be filled with concrete or grout attaining a minimum compressive strength of 7,000psi at 28days unless otherwise determined by the Structural Design Engineer of Records. Piles installed within the influence line of the existing subway within Union Avenue shall end bear below the influence line as determined by a 1:1 ratio from the bottom of pile to the bottom of subway structure. Pile spacing should be a minimum of 2.5 pile diameters.

Care should be taken to keep construction equipment as far away as possible from the piles until the pile caps have been installed and the concrete has adequately set. Heavy equipment traveling or operating to close to the piles may displace them laterally. Also, any piles within six diameters of a previously installed pile should not be installed within the same 24-hour period unless directed otherwise by the engineer.

Lateral and Uplift Capacity: PSI anticipates that the drilled piers may be required to provide lateral restraint. PSI preliminarily recommends that the allowable lateral capacity of each pier be limited to one ton per pile. If greater lateral resistance is desired, PSI should be contacted. Additional lateral capacity may be achieved with the use of reinforcing steel. Piles located near a lot line shall be designed on the assumption that the adjacent lot will be excavated to a depth of 10 feet below the nearest legally established curb level, and therefore, the top 10 feet of the pile shall be deemed to provide no lateral or vertical support. PSI anticipates that the piles will not be required to provide uplift resistance. PSI should be contacted if the piles require uplift resistance.

Contractor Certification: The capacity of drilled concrete piles is very sensitive to the contractor's means and methods of installation. A Geotechnical Engineer licensed in the State of New York should certify the required working capacity of the installed piles has been obtained. The contractor should be required to submit qualifications including resumes of the engineer, project manager, and field supervisor.

Pile Groups: Group efficiency for the above-stated axial compression capacities is 1.0, provided that the pile spacing within groups is at least three pile diameters, center-to center. Group efficiency for the above-stated axial tension capacities is 1.0 provided that uplift piles are spaced at least eight pile diameters, center to center. PSI requests notification if closer pile spacing is proposed.

Frost Coverage and Embedment Depths: Pile caps subject to frost action should be placed at least 48 inches below adjacent exterior grades or the depth required by local building codes to provide protection from frost penetration. Interior pile caps not subject to frost action may be placed at a minimum depth of

18 inches below the slab subgrade.

Load Tests: Since drilled piles are installed without the benefit of dynamic driving records, PSI recommends that at least one load test be performed to verify that the allowable compression capacities will be appropriate for the specified pile size and installation depth. A load test is required per NYC Building Code requirements if the piles bear on the weathered rock stratum. The load test should be performed to at least 250 percent of the design load. Production piles should then be installed based on installation criteria similar to those used for a successfully load-tested pile. The load test should be conducted in accordance with the latest edition of ASTM test method D-1143 standard procedures. If ground and/or installation procedures change, additional testing may be required.

Low strain integrity testing should also be performed on selected piles. This test involves impacting the top of a pile with a hand held hammer causing a compressive wave to travel down the pile. Wave reflections from non-uniformities, discontinuities, or the pile tip are observed in the pile top velocity, which are then processed and interpreted by an experienced engineer. With an observed reflection from the pile tip, the length of existing piles can be determined.

Inspection: Inspection should be maintained by the Owner's Geotechnical Engineer during load testing and production pile installation to record drilling final bearing depths and elevations to ensure minimum bearing strata and depth are encountered, verify good construction practices are followed, record concrete take amounts for each pile, fabricate test cylinders for compressive strength testing of the grout placed, monitor grout placement techniques, piles are installed at the proper location and record plumbness, and to confirm that the required minimum installation criteria is achieved. Tips of the installed piles must reach the proposed bearing depth and layer. Piles which encounter refusal before reaching the proposed bearing layer should be brought to the immediate attention of the Owner's Geotechnical Engineer.

NOTE:

The refusal of the aforementioned equipment reflects a material that is not known and is subject to additional analysis. PSI Engineering strongly recommends additional prospection of the current site, subject to additional borings and test pits to confirm the unknown stratum at approximately 10 feet deep.

END OF RECOMMENDATIONS

ENGINEERING, PLLC

990 Westbury Road, Suite 101, Westbury, NY 11590 • Tel: (516) 586-8047 • Fax: (516) 586-8049

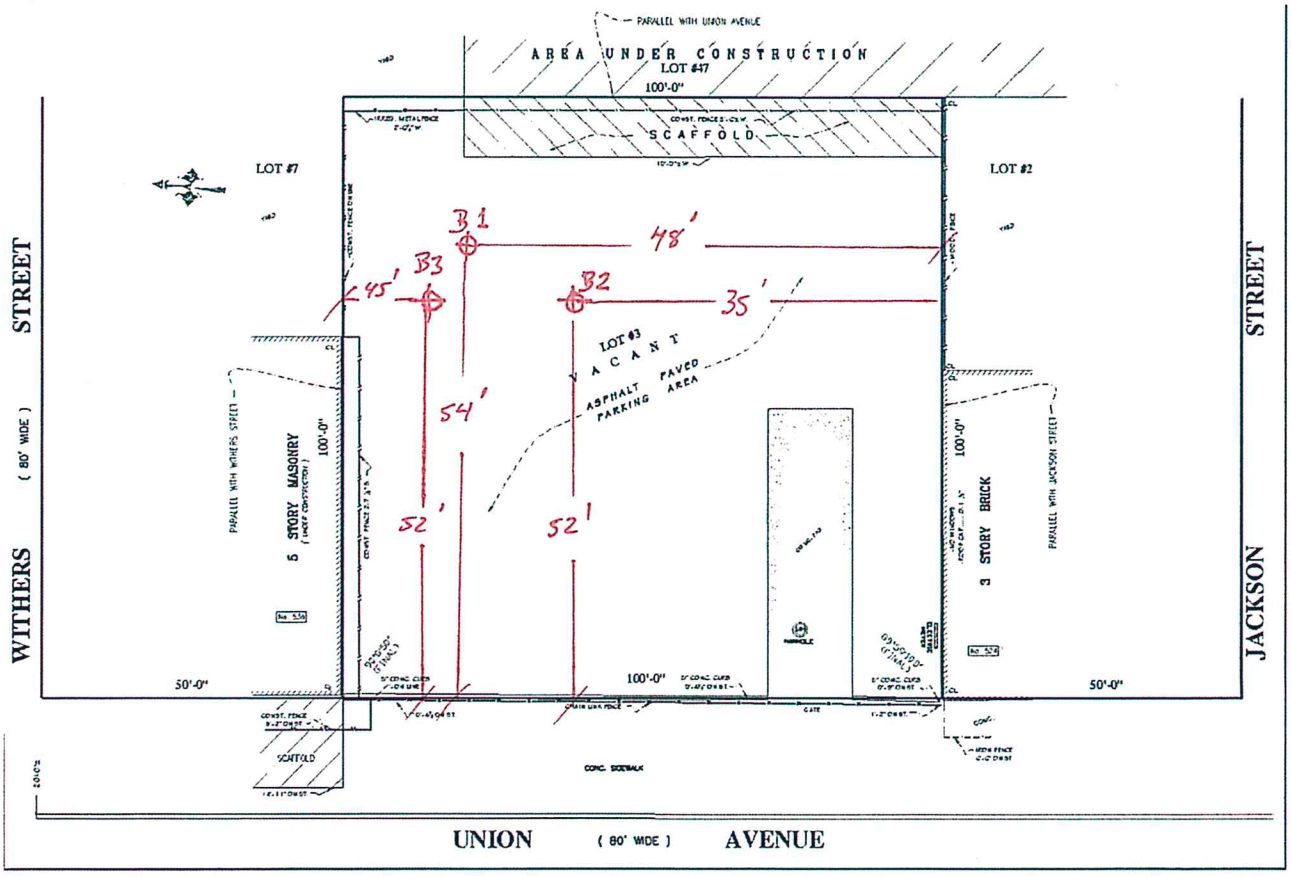

FIGURE 1

ENGINEERING, PLLC

990 Westbury Road, Suite 101, Westbury, NY 11590 • Tel: (516) 586-8047 • Fax: (516) 586-8049

ENGINEER'S CERTIFICATION

We certify as follows:

We have read this entire report, investigated the facts set forth in the report and the facts underlying the report, and conducted the visual inspection referred to above with due diligence in order to form a basis for this certification.

We certify that this report, which is prepared by us, discloses all the material facts which were discernible from a one-engineer, limited time, limited observation, walk-through visual inspection of those accessible and observable areas of the site that was examined. This certification is made for the benefit of the client. We certify that this report, which is based on our visual examination:

(i) sets forth in narrative form the physical condition of the accessible and observable examined areas of the subject site and is current and accurate as of the date of examination;
(ii) affords, in our professional opinion, the client an adequate basis upon which to base their judgment concerning the examined areas provided that the client reads this report, follows our recommendations, and calls our offices with any questions that might result from that reading;
(ii) does not omit any material fact;
(iv) does not contain any untrue statement of a material fact;
(v) does not contain any fraud, deception, concealment, or suppression;
(vi) does not contain any promise or representation as to the future which is beyond reasonable expectation or unwarranted by existing circumstances;
(vii) does not contain any representation or statement which is false, where we:
(a) knew the truth;
(b) with reasonable effort could have known the truth;
(c) made no reasonable effort to ascertain the truth, or
(d) did not have knowledge concerning the representations or statement made.

It is to be understood that all aspects of the physical condition of the site cannot be determined by a one-engineer, limited time, limited observation walk-through visual examination of accessible and observable areas, and that all statements contained in this certification are premised on and limited to such visual examination.

We further certify that to our knowledge, we are not owned or controlled by and have no beneficial interest in the building owner.

ENGINEERING, PLLC

990 Westbury Road, Suite 101, Westbury, NY 11590 • Tel: (516) 586-8047 • Fax: (516) 586-8049

NOTE

The opinions expressed in this report are based on our observations and assume the accuracy of the history provided to us and were rendered during the normal course of business days from April to May, 2015. They will be kept as part of our normal business records until May,' 2016. Copies of the report will be available until then at a nominal cost exclusively to the client or agent thereof.

Unauthorized reproduction or alteration of this report or any part thereof, without express written permission of PSI Engineering, PLLC, is a violation of State law and is prohibited. Copies of this report not bearing the Professional Engineer's original inked seal or embossed seal shall not be considered to be a valid true copy.

No part of this document may be reproduced or utilized in any form or by any means, electronic or mechanical, including photocopying, facsimile, recording, by any information retrieval system, transmission over any electronic network, copying onto any electronic, mechanical or optical recording medium, making the document available over network, conversion of this document into portable document format, scanning of this document by an optical scanner, or alteration using HTIvIL, XML, or SGML, without permission in writing. Scanning of this document, or any part of this document, for any purposes is prohibited without prior permission in writing.

Posting any portion of this document on any Internet service, or sending any part of this document over any electronic network is a violation of law and is prohibited.

Mauricio Andrade, P.E.
PSI Engineering, PLLC.

Address all correspondence relating to this report to our office at 990 Westbury Rd., Ste. 101 New York, NY 11590, and include the job number 2014332 for reference.

ENGINEERING, PLLC

990 Westbury Road, Suite 101, Westbury, NY 11590 • Tel: (516) 586-8047 • Fax: (516) 586-8049

Appendix A

MUNICIPAL TESTING LABORATIRY, INC
375 RABRODRIVE, HAUPPAUGE, NY 11788

CLIENT: PSI
RIG TYPE: Geo-probe
HAMMER: 140 lb Auto

DATE: 8/28/15
JOB LOCATION: 526 Union Ave
DRILLER: Bruce
HELPER: Willy

BORING NO	DEPTH (FT)	SAMPLE NO	BLOWS PER 6"		RECOVERY (")	DESCRIPTION	SPT
B1	0					Core drilled to 1'6" (*) See below	
	1	S1		[illegible]		Black m-f Gravel, c-f sand, dirt,	
	2			13	4"	Grease, Oil, wet	
	3	S2	13	15	17"	Black c-f Sand, c-f Gravel, Brick	37
	4		22	20		fragments, ashes, wet	
	5						
	6	S3	8	5	19	Brown m-f SAND, little plus clay,	9
	7		4	5		trace m-f gravel, wet	
	8						
	9						
	10						
	11	S4	3	1	2"	Brown m-f Sand, trace fine gravel	1
	12		W. of	Hammer		wet	
	13						
	14						
	15	S5	25	25	4"	Black organics, oil, grease	43
	16		18	12			
	17						
	18					After 16' depth SPT sampler	
	19					was bent, could not penetrate.	
	20						
	21						
	22						
	23					(*) Core drilled to 1'6", 6" of	
	24					Rock, marble and metal pieces	
	25					recovered from 12" to 18".	
	26						
	27						
	28						
	29						
	30						
	31						
	32						
	33						
	34						
	35						
	36						
	37						
	38						
	39						
	40						

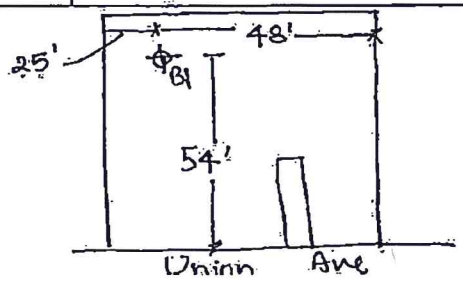

Submitted By: Bigyan Kattel

MUNICIPAL TESTING LABORATIRY, INC.
375 RABRODRIVE, HAUPPAUGE, NY 11788

CLIENT: PSI
RIG TYPE: Geo probe
HAMMER: 140 lb Auto

DATE: 8/28/15
JOB LOCATION: 526 Union Ave
DRILLER: Bruce
HELPER: Willy

BORING NO	DEPTH (FT)	SAMPLE NO	BLOWS PER 6"		RECOVERY (")	DESCRIPTION	SPT
B2	0					Core drilled to 18" (*)See below	
	1	S1	-	-		Black C-F Gravel, c-f Sand, brick	
	2		-	6	6"	fragments, wet	
	3	S2	4	5	18"	Top half- Black C-F Gravel, little m-f Sand,	10
	4		5	6		brick fragment, Bottom half- Brown C-F	
	5					SAND, little Silt, trace C-F Gravel, brick, wet	
	6	S3	4	2	10"	Brown C-F SAND, some C-F gravel,	3
	7		1	1		trace silt, wet	
	8						
	9						
	10						3
	11	S4	5	2	20"	Brown & Black m-f SAND, some	
	12		1	1		Clay, Organics, oil wet	
	13						
	14						
	15						
	16	S5	WOH	1	18"	Grey Clay and organics, wet	2
	17		1	6			
	18						
	19						
	20						
	21	S6	5	5	10"	Brown m-f SAND, some silt,	
	22		Refusal	Refusal		little clay, trace fine gravel, wet	
	23						
	24						
	25						
	26					(*) Core drilled to 18"	
	27					0-6" - top soil	
	28					6"- 11" - Asphalt	
	29					11"- 18" - Rock	
	30						
	31						
	32						
	33						
	34						
	35						
	36						
	37						
	38						
	39						
	40						

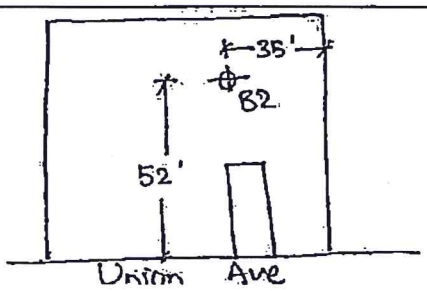

Submitted By: Bigyan Kattel

MUNICIPAL TESTING LABORATIRY, INC
375 RABRODRIVE, HAUPPAUGE, NY 11788

CLIENT: PSI
RIG TYPE: Geo – Probe
HAMMER: Auto 140 lb

DATE: 8/28/15
JOB LOCATION: 526 Union Ave
DRILLER: Bruce
HELPER: Willy

BORING NO	DEPTH (FT)	SAMPLE NO	BLOWS PER 6"		RECOVERY (")	DESCRIPTION	SPT
B3	0					Core drilled to 1' 6" (*) See below	
	1	S1				Black C-f Gravel, C-f Sand, dirt,	
	2			8	4"	Oil, grease, fragment of Brick, Wet	
	3	S2	10	13	18"	Black C-F SAND, m-f Gravel, Brick	26
	4		13	14		fragments, Ashes, Oil, Wet	
	5						
	6	S3	6	4	20"	Brown m-f SAND, some clay, little	9
	7		5	4		silt, trace fine gravel, wet	
	8						
	9						
	10						
	11	S4	2	1		Brown m-f SAND, some silt,	2
	12		1	1		little clay, trace fine gravel, wet	
	13						
	14						
	15						
	16	S5	Weight		20"	Black & Brown mix of organics	
	17		of Hammer			and clay.	
	18						
	19						
	20						
	21	S6	11	13	18	Brown m-f SAND, some silt, little	24
	22		11	9		clay, trace C-f gravel, brick, wet	
	23						
	24						
	25						
	26	S7	3	2	12"	Brown m-f SAND, some silt, little	3
	27		1	Reject		plus clay, trace fine gravel, wet	
	28						
	29						
	30						
	31					Water table at 7'2"	
	32						
	33					(*) Core drilled 1'6", 6" Rock	
	34					piece was recovered.	
	35						
	36						
	37						
	38						
	39						
	40						

Submitted By: Bigyan Kattel

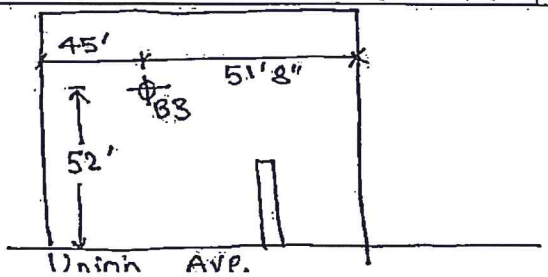

APPENDIX C

SOIL BORING LOGS

SOIL BORING LOG

Client:	526 Union, Brooklyn, New York	Boring No.:	SB-1
Project # :	15.08-376	Sheet 1 of	1
Site Location:	526 Union Avenue, Brooklyn, NY 11231	Date:	11/18/15
Drilling Co:	PAL Environmental Corp.	Time:	9:15am
Method:	Direct Push	Location of boring: Southeastern area of site	
Personnel:	Mark McCormack and Scott Narod	Well Specifications: 1" diameter PVC screened from 15' through 5' BGS.	
Total Depth:	15 ft Depth to Groundwater: 6.86 ft	**GROUNDWATER SAMPLE COLLECTED**	

Creative Environment Solutions Corp.
39 West 37th Street, 14th Floor, New York, NY 10018
Phone: 212.290.6323 Fax: 212.290.6325
LICENSED & APPROVED by NYS DOH/DOL/DOS, NYC DOB/DEP, FDNY, PIE
WBE Certified
www.CESCenter.com

depth (feet)	PID (ppm)	Blow Counts	Sample ID	Depth (From-To)	Moisture Content	Recovery	Soil Classification	Comments
							0.25' of RCA (crushed gravel, crushed brick, crushed concrete fragments)	
1, 2, 3, 4	0.0	N/A	0'-5'	0'-5'	Dry	24"	Dark Brown and Light Brown Fine to Coarse Sand, little Silt, trace fine Gravel and metal fragments (FILL) **SAMPLE COLLECTED FROM 0'-2' BGS**	No staining, no odor
5, 6, 7, 8, 9	0.0	N/A	5-10	5'-10'	Saturated at 7' BGS	42"	Dark Brown and Light Brown Fine to Coarse Sand, little Silt **SAMPLE COLLECTED FROM 5'-7' BGS**	No staining, no odor
10, 11, 12, 13, 14	0.0	N/A	10-15	10'-15'	Saturated at 7' BGS	54"	Dark Brown and Light Brown Fine to Coarse Sand, little Silt	No staining, no odor **TERMINAL DEPTH OF BORING AT 15' BGS**
							Dark Brown and Light Brown/Orange fibrous peat layer (marsh mat)/wet, not saturated	
15								

SOIL BORING LOG

Client:	526 Union, Brooklyn, New York	Boring No.:	SB-2
Project # :	15.08-376	Sheet 1 of	1
Site Location:	526 Union Avenue, Brooklyn, NY 11231	Date:	11/18/15
Drilling Co:	PAL Environmental Corp.	Time:	11:45pm
Method:	Direct Push	Location of boring: Southwest area of site	
Personnel:	Mark McCormack and Scott Narod	Well Specifications: 1" diameter PVC screened from 15' through 5' BGS.	
Total Depth:	15 ft Depth to Groundwater: ~7.03 ft	**GROUNDWATER SAMPLE COLLECTED**	

Creative Environment Solutions Corp.
39 West 37th Street, 14th Floor, New York, NY 10018
Phone: 212.290.6323 Fax: 212.290.6325
LICENSED & APPROVED by NYS DOH/DOL/DOS, NYC DOB/DEP, FDNY, PIE
WBE Certified
www.CESCenter.com

depth (feet)	PID (ppm)	Blow Counts	Sample ID	Depth (From-To)	Moisture Content	Recovery	Soil Classification	Comments
1, 2, 3, 4	0.0	N/A	0'-5'	0'-5'	Dry	24"	0.25' of RCA (crushed gravel, crushed brick, crushed concrete fragments)	
							Dark Brown and Light Brown Fine to Coarse Sand, little Silt, trace medium Gravel, trace clay **SAMPLE COLLECTED FROM 0'-2' BGS**	No staining, no odor
5, 6, 7, 8, 9	0.0	N/A	5-10	5'-10'	Saturated at 7' BGS	36"	Light Brown Fine to Coarse Sand, little Silt	No staining, no odor
							Light Brown Clay, little fine Sand, trace Silt **SAMPLE COLLECTED FROM 5'-7' BGS**	
							Dark Brown/Black Fine Gravel AND Coarse Sand, trace Silt	
10, 11, 12, 13, 14, 15	0.0	N/A	10-15	10'-15'	Saturated at 7' BGS	54"	Dark Brown and Light Brown Clay, little Fine to Coarse Sand,trace Silt	No staining, no odor **TERMINAL DEPTH OF BORING AT 15' BGS**

SOIL BORING LOG

Client:	526 Union, Brooklyn, New York	Boring No.:	SB-3
Project # :	15.08-376	Sheet 1 of	1
Site Location:	526 Union Avenue, Brooklyn, NY 11231	Date:	11/18/15
Drilling Co:	PAL Environmental Corp.	Time:	11:48am
Method:	Direct Push	Location of boring:	
Personnel:	Mark McCormack and Scott Narod	Central area of site in proximity to proposed elevator	Well
Total Depth:	15 ft Depth to Groundwater: ~7.00 ft	Specifications: well not constructed	

Creative Environment Solutions Corp.
39 West 37th Street, 14th Floor, New York, NY 10018
Phone: 212.290.6323 Fax: 212.290.6325
LICENSED & APPROVED by NYS DOH/DOL/DOS, NYC DOB/DEP, FDNY, PIE
WBE Certified
www.CESCenter.com

depth (feet)	PID (ppm)	Blow Counts	Sample ID	Depth (From-To)	Moisture Content	Recovery	Soil Classification	Comments
							0.25' of RCA (crushed gravel, crushed brick, crushed concrete fragments)	
1	0.0	N/A	0'-5'	0'-5'	Dry	16"	Dark Brown, Light Brown/Orange Fine to Coarse Sand, little Fine to Medium Gravel, trace Silt **SAMPLE COLLECTED FROM 0'-5' BGS**	No staining, no odor
2								
3	25							No staining, light odor observed from 2.5'-5' BGS
4								
5								
6	0.0	N/A	5-10	5'-10'	Saturated at 7' BGS	36	Dark Brown and Light Brown Fine to Medium Gravel, little Clay,trace Silt **SAMPLE COLLECTED FROM 7'-8' BGS**	No staining, no odor
7								
8								
9								
10								
11	0.0	N/A	10-15	10'-15'	Saturated at 7' BGS	0.5"	Dark Brown and Light Brown Fine to Medium Gravel, little Clay,trace Silt	No staining, no odor **TERMINAL DEPTH OF BORING AT 15' BGS**
12								
13								
14								
15								

SOIL BORING LOG

Client:	526 Union, Brooklyn, New York	Boring No.:	SB-4
Project # :	15.08-376	Sheet 1 of	1
Site Location:	526 Union Avenue, Brooklyn, NY 11231	Date:	11/18/15
Drilling Co:	PAL Environmental Corp.	Time:	1:00pm
Method:	Direct Push	Location of boring:	
Personnel:	Mark McCormack and Scott Narod	Northeast area of site	Well
Total Depth:	15 ft Depth to Groundwater: ~7.00 ft	Specifications: well not constructed	

Creative Environment Solutions Corp.
39 West 37th Street, 14th Floor, New York, NY 10018
Phone: 212.290.6323 Fax: 212.290.6325
LICENSED & APPROVED by NYS DOH/DOL/DOS, NYC DOB/DEP, FDNY, PIE
WBE Certified
www.CESCenter.com

depth (feet)	PID (ppm)	Blow Counts	Sample ID	Depth (From-To)	Moisture Content	Recovery	Soil Classification	Comments
1, 2, 3, 4, 5	0.0	N/A	0'-5'	0'-5'	Dry	28"	0.25' of RCA (crushed gravel, crushed brick, crushed concrete fragments) Dark Brown, Light Brown/Orange Fine to Coarse Sand, little Fine to Medium Gravel, little Coarse Sand, trace Silt, trace red brick fragments (FILL) **SAMPLE COLLECTED FROM 0'-2' BGS**	No staining, no odor
6, 7, 8, 9, 10	0.0	N/A	5-10	5'-10'	Saturated at 7' BGS	36"	Dark Brown and Light Brown Fine to Medium Gravel, some Coarse Sand, little Clay,trace Silt **SAMPLE COLLECTED FROM 5'-7' BGS**	No staining, no odor
11, 12, 13, 14, 15	0.0	N/A	10-15	10'-15'	Saturated at 7' BGS	36"	Dark Brown and Light Brown/Orange fibrous peat layer (marsh mat)/wet, not saturated, some Clay,trace Silt	No staining, no odor **TERMINAL DEPTH OF BORING AT 15' BGS**

SOIL BORING LOG

Client:	526 Union, Brooklyn, New York	Boring No.:	SB-5
Project # :	15.08-376	Sheet 1 of	1
Site Location:	526 Union Avenue, Brooklyn, NY 11231	Date:	11/18/15
Drilling Co:	PAL Environmental Corp.	Time:	2:00pm
Method:	Direct Push	Location of boring:	
Personnel:	Mark McCormack and Scott Narod	Northwest area of site	Well
Total Depth:	15 ft Depth to Groundwater: ~7.00 ft	Specifications: well not constructed	

Creative Environment Solutions Corp.
39 West 37th Street, 14th Floor, New York, NY 10018
Phone: 212.290.6323 Fax: 212.290.6325
LICENSED & APPROVED by NYS DOH/DOL/DOS, NYC DOB/DEP, FDNY, PIE
WBE Certified
www.CESCenter.com

depth (feet)	PID (ppm)	Blow Counts	Sample ID	Depth (From-To)	Moisture Content	Recovery	Soil Classification	Comments
1, 2, 3, 4, 5	0.0	N/A	0'-5'	0'-5'	Dry	48"	0.25' of RCA (crushed gravel, crushed brick, crushed concrete fragments) Dark Brown and Grey Coarse Sand AND Fine to Medium Gravel,little crushed wood (FILL), trace silt **SAMPLE COLLECTED FROM 0'-2' BGS**	No staining, no odor
6, 7, 8, 9, 10	0.0	N/A	5-10	5'-10'	Saturated at 7' BGS	36"	Dark Brown and Light Brown Fine to Medium Gravel, some Fine to Medium Sand, little Silt **SAMPLE COLLECTED FROM 5'-7' BGS**	No staining, no odor
11, 12, 13, 14, 15	0.0	N/A	10-15	10'-15'	Saturated at 7' BGS	48"	Dark Brown and Light Brown Coarse Sand, little Silt, little Dark Brown silty Clay	No staining, no odor **TERMINAL DEPTH OF BORING AT 15' BGS**

SOIL BORING LOG

Client:	526 Union, Brooklyn, New York	Boring No.:	SB-6
Project # :	15.08-376	Sheet 1 of	1
Site Location:	526 Union Avenue, Brooklyn, NY 11231	Date:	11/18/15
Drilling Co:	PAL Environmental Corp.	Time:	3:00pm
Method:	Direct Push	Location of boring:	North-central area of site (proposed parking lot)
Personnel:	Mark McCormack and Scott Narod	Well Specifications:	1" diameter PVC screened from 15' through 5' BGS.
Total Depth:	15 ft Depth to Groundwater: 7.53 ft	**GROUNDWATER SAMPLE COLLECTED**	

Creative Environment Solutions Corp.
39 West 37th Street, 14th Floor, New York, NY 10018
Phone: 212.290.6323 Fax: 212.290.6325
LICENSED & APPROVED by NYS DOH/DOL/DOS, NYC DOB/DEP, FDNY, PIE
WBE Certified
www.CEScenter.com

depth (feet)	PID (ppm)	Blow Counts	Sample ID	Depth (From-To)	Moisture Content	Recovery	Soil Classification	Comments
1, 2, 3, 4, 5	0.0	N/A	0'-5'	0'-5'	Dry	48"	0.25' of RCA (crushed gravel, crushed brick, crushed concrete fragments) Dark Brown/Light Brown/Tan Medium to Coarse Sand, little Medium Gravel, trace Silt, trace CLay **SAMPLE COLLECTED FROM 0'-2' BGS SAMPLE COLLECTED FROM 2'-4' BGS**	No staining, no odor
6, 7, 8, 9, 10	0.0	N/A	5-10	5'-10'	Saturated at 7.5' BGS	36"	Light Brown Fine to Medium Gravel, some Silty Clay **SAMPLE COLLECTED FROM 6'-8' BGS**	No staining, no odor
11, 12, 13, 14, 15	0.0	N/A	10-15	10'-15'	Saturated at 7.5' BGS	30"	Dark Brown and Light Brown Coarse Sand AND Silt, little Fine Gravel	No staining, no odor **TERMINAL DEPTH OF BORING AT 15' BGS**

APPENDIX D

LABORATORY ANALYTICAL DATA

ANALYTICAL REPORT

Lab Number:	L1529824
Client:	Viridian, Inc. PO Box 3009 Memorial Station Upper Montclair, NJ 07043
ATTN:	Flint Kinkade
Phone:	(973) 746-7600
Project Name:	CES, BROOKLYN
Project Number:	1104-15
Report Date:	11/19/15

The original project report/data package is held by Alpha Analytical. This report/data package is paginated and should be reproduced only in its entirety. Alpha Analytical holds no responsibility for results and/or data that are not consistent with the original.

Certifications & Approvals: NY (11627), CT (PH-0141), NH (2206), NJ NELAP (MA015), RI (LAO00299), ME (MA00030), PA (68-02089), VA (460194), LA NELAP (03090), FL (E87814), TX (T104704419), WA (C954), USFWS (Permit #LE2069641), USDA (Permit #P330-11-00109), US Army Corps of Engineers.

320 Forbes Boulevard, Mansfield, MA 02048-1806
508-822-9300 (Fax) 508-822-3288 800-624-9220 - www.alphalab.com

Project Name: CES, BROOKLYN
Project Number: 1104-15

Lab Number: L1529824
Report Date: 11/19/15

Alpha Sample ID	Client ID	Matrix	Sample Location	Collection Date/Time	Receive Date
L1529824-01	CES-1	SOIL_VAPOR	526 UNION AVE., BROOKLYN, NY	11/12/15 12:26	11/13/15
L1529824-02	CES-3	SOIL_VAPOR	526 UNION AVE., BROOKLYN, NY	11/12/15 12:48	11/13/15
L1529824-03	CES-2	SOIL_VAPOR	526 UNION AVE., BROOKLYN, NY	11/12/15 13:19	11/13/15
L1529824-04	CES-4	SOIL_VAPOR	526 UNION AVE., BROOKLYN, NY	11/12/15 13:48	11/13/15

Project Name: CES, BROOKLYN **Lab Number:** L1529824
Project Number: 1104-15 **Report Date:** 11/19/15

Case Narrative

The samples were received in accordance with the Chain of Custody and no significant deviations were encountered during the preparation or analysis unless otherwise noted. Sample Receipt, Container Information, and the Chain of Custody are located at the back of the report.

Results contained within this report relate only to the samples submitted under this Alpha Lab Number and meet all of the requirements of NELAC, for all NELAC accredited parameters. The data presented in this report is organized by parameter (i.e. VOC, SVOC, etc.). Sample specific Quality Control data (i.e. Surrogate Spike Recovery) is reported at the end of the target analyte list for each individual sample, followed by the Laboratory Batch Quality Control at the end of each parameter. Tentatively Identified Compounds (TICs), if requested, are reported for compounds identified to be present and are not part of the method/program Target Compound List, even if only a subset of the TCL are being reported. If a sample was re-analyzed or re-extracted due to a required quality control corrective action and if both sets of data are reported, the Laboratory ID of the re-analysis or re-extraction is designated with an "R" or "RE", respectively. When multiple Batch Quality Control elements are reported (e.g. more than one LCS), the associated samples for each element are noted in the grey shaded header line of each data table. Any Laboratory Batch, Sample Specific % recovery or RPD value that is outside the listed Acceptance Criteria is bolded in the report. All specific QC information is also incorporated in the Data Usability format of our Data Merger tool where it can be reviewed along with any associated usability implications. Soil/sediments, solids and tissues are reported on a dry weight basis unless otherwise noted. Definitions of all data qualifiers and acronyms used in this report are provided in the Glossary located at the back of the report.

In reference to questions H (CAM) or 4 (RCP) when "NO" is checked, the performance criteria for CAM and RCP methods allow for some quality control failures to occur and still be within method compliance. In these instances the specific failure is not narrated but noted in the associated QC table. The information is also incorporated in the Data Usability format of our Data Merger tool where it can be reviewed along with any associated usability implications.

Please see the associated ADEx data file for a comparison of laboratory reporting limits that were achieved with the regulatory Numerical Standards requested on the Chain of Custody.

HOLD POLICY
For samples submitted on hold, Alpha's policy is to hold samples (with the exception of Air canisters) free of charge for 21 calendar days from the date the project is completed. After 21 calendar days, we will dispose of all samples submitted including those put on hold unless you have contacted your Client Service Representative and made arrangements for Alpha to continue to hold the samples. Air canisters will be disposed after 3 business days from the date the project is completed.

Please contact Client Services at 800-624-9220 with any questions.

Project Name: CES, BROOKLYN **Lab Number:** L1529824
Project Number: 1104-15 **Report Date:** 11/19/15

Case Narrative (continued)

Volatile Organics in Air

Canisters were released from the laboratory on November 11, 2015. The canister certification results are provided as an addendum.

Samples L1529824-02 and -04 results for Acetone should be considered estimated due to co-elution with a non-target peak.

Sample L1529824-04 The presence of 2,2,4-Trimethylpentane and 4-methyl-2-pentanone could not be determined in this sample due to a non-target compounds interfering with the identification and quantification of these compounds.

Sample L1529824-04: The sample has elevated detection limits due to the dilution required by the elevated concentrations of non-target compounds in the sample.

The WG842057-3 LCS recoveries for 1,2,4-Trichlorobenzene (153%), 1,2,3-Trichlorobenzene (141%) and Hexachlorobutadiene (154%) are above the upper 130% acceptance limit. The response for these compounds was elevated however they were not detected in any of the associated samples therefore no further action was required.

Sample Receipt

The canister size listed on the Chain of Custody form is 1 liter however 2.7 liter canisters were used for the samples in this job.

I, the undersigned, attest under the pains and penalties of perjury that, to the best of my knowledge and belief and based upon my personal inquiry of those responsible for providing the information contained in this analytical report, such information is accurate and complete. This certificate of analysis is not complete unless this page accompanies any and all pages of this report.

Authorized Signature: Christopher J. Anderson

Title: Technical Director/Representative Date: 11/19/15

AIR

Project Name: CES, BROOKLYN
Project Number: 1104-15
Lab Number: L1529824
Report Date: 11/19/15

SAMPLE RESULTS

Lab ID: L1529824-01
Client ID: CES-1
Sample Location: 526 UNION AVE., BROOKLYN, NY
Matrix: Soil_Vapor
Anaytical Method: 48,TO-15
Analytical Date: 11/19/15 01:18
Analyst: RY

Date Collected: 11/12/15 12:26
Date Received: 11/13/15
Field Prep: Not Specified

Parameter	ppbV Results	ppbV RL	ppbV MDL	ug/m3 Results	ug/m3 RL	ug/m3 MDL	Qualifier	Dilution Factor
Volatile Organics in Air - Mansfield Lab								
Dichlorodifluoromethane	0.250	0.200	--	1.24	0.989	--		1
Chloromethane	ND	0.200	--	ND	0.413	--		1
Freon-114	ND	0.200	--	ND	1.40	--		1
Vinyl chloride	ND	0.200	--	ND	0.511	--		1
1,3-Butadiene	1.28	0.200	--	2.83	0.442	--		1
Bromomethane	ND	0.200	--	ND	0.777	--		1
Chloroethane	ND	0.200	--	ND	0.528	--		1
Ethanol	25.0	5.00	--	47.1	9.42	--		1
Vinyl bromide	ND	0.200	--	ND	0.874	--		1
Acetone	43.3	1.00	--	103	2.38	--		1
Trichlorofluoromethane	5.20	0.200	--	29.2	1.12	--		1
Isopropanol	6.64	0.500	--	16.3	1.23	--		1
1,1-Dichloroethene	ND	0.200	--	ND	0.793	--		1
Tertiary butyl Alcohol	13.7	0.500	--	41.5	1.52	--		1
Methylene chloride	ND	0.500	--	ND	1.74	--		1
3-Chloropropene	ND	0.200	--	ND	0.626	--		1
Carbon disulfide	0.807	0.200	--	2.51	0.623	--		1
Freon-113	ND	0.200	--	ND	1.53	--		1
trans-1,2-Dichloroethene	ND	0.200	--	ND	0.793	--		1
1,1-Dichloroethane	ND	0.200	--	ND	0.809	--		1
Methyl tert butyl ether	ND	0.200	--	ND	0.721	--		1
2-Butanone	5.61	0.500	--	16.5	1.47	--		1
cis-1,2-Dichloroethene	ND	0.200	--	ND	0.793	--		1
Ethyl Acetate	ND	0.500	--	ND	1.80	--		1

Project Name: CES, BROOKLYN
Project Number: 1104-15
Lab Number: L1529824
Report Date: 11/19/15

SAMPLE RESULTS

Lab ID: L1529824-01
Client ID: CES-1
Sample Location: 526 UNION AVE., BROOKLYN, NY
Date Collected: 11/12/15 12:26
Date Received: 11/13/15
Field Prep: Not Specified

Parameter	ppbV Results	ppbV RL	ppbV MDL	ug/m3 Results	ug/m3 RL	ug/m3 MDL	Qualifier	Dilution Factor
Volatile Organics in Air - Mansfield Lab								
Chloroform	0.715	0.200	--	3.49	0.977	--		1
Tetrahydrofuran	ND	0.500	--	ND	1.47	--		1
1,2-Dichloroethane	ND	0.200	--	ND	0.809	--		1
n-Hexane	0.210	0.200	--	0.740	0.705	--		1
1,1,1-Trichloroethane	2.26	0.200	--	12.3	1.09	--		1
Benzene	0.375	0.200	--	1.20	0.639	--		1
Carbon tetrachloride	ND	0.200	--	ND	1.26	--		1
Cyclohexane	ND	0.200	--	ND	0.688	--		1
1,2-Dichloropropane	ND	0.200	--	ND	0.924	--		1
Bromodichloromethane	ND	0.200	--	ND	1.34	--		1
1,4-Dioxane	ND	0.200	--	ND	0.721	--		1
Trichloroethene	ND	0.200	--	ND	1.07	--		1
2,2,4-Trimethylpentane	ND	0.200	--	ND	0.934	--		1
Heptane	ND	0.200	--	ND	0.820	--		1
cis-1,3-Dichloropropene	ND	0.200	--	ND	0.908	--		1
4-Methyl-2-pentanone	ND	0.500	--	ND	2.05	--		1
trans-1,3-Dichloropropene	ND	0.200	--	ND	0.908	--		1
1,1,2-Trichloroethane	ND	0.200	--	ND	1.09	--		1
Toluene	0.434	0.200	--	1.64	0.754	--		1
2-Hexanone	0.736	0.200	--	3.02	0.820	--		1
Dibromochloromethane	ND	0.200	--	ND	1.70	--		1
1,2-Dibromoethane	ND	0.200	--	ND	1.54	--		1
Tetrachloroethene	4.68	0.200	--	31.7	1.36	--		1
Chlorobenzene	ND	0.200	--	ND	0.921	--		1
Ethylbenzene	ND	0.200	--	ND	0.869	--		1
p/m-Xylene	ND	0.400	--	ND	1.74	--		1
Bromoform	ND	0.200	--	ND	2.07	--		1
Styrene	ND	0.200	--	ND	0.852	--		1

Project Name: CES, BROOKLYN
Project Number: 1104-15
Lab Number: L1529824
Report Date: 11/19/15

SAMPLE RESULTS

Lab ID: L1529824-01
Client ID: CES-1
Sample Location: 526 UNION AVE., BROOKLYN, NY
Date Collected: 11/12/15 12:26
Date Received: 11/13/15
Field Prep: Not Specified

Parameter	ppbV Results	ppbV RL	ppbV MDL	ug/m3 Results	ug/m3 RL	ug/m3 MDL	Qualifier	Dilution Factor
Volatile Organics in Air - Mansfield Lab								
1,1,2,2-Tetrachloroethane	ND	0.200	--	ND	1.37	--		1
o-Xylene	ND	0.200	--	ND	0.869	--		1
4-Ethyltoluene	ND	0.200	--	ND	0.983	--		1
1,3,5-Trimethylbenzene	ND	0.200	--	ND	0.983	--		1
1,2,4-Trimethylbenzene	0.406	0.200	--	2.00	0.983	--		1
Benzyl chloride	ND	0.200	--	ND	1.04	--		1
1,3-Dichlorobenzene	ND	0.200	--	ND	1.20	--		1
1,4-Dichlorobenzene	ND	0.200	--	ND	1.20	--		1
1,2-Dichlorobenzene	ND	0.200	--	ND	1.20	--		1
1,2,4-Trichlorobenzene	ND	0.200	--	ND	1.48	--		1
Hexachlorobutadiene	ND	0.200	--	ND	2.13	--		1

Internal Standard	% Recovery	Qualifier	Acceptance Criteria
1,4-Difluorobenzene	98		60-140
Bromochloromethane	100		60-140
chlorobenzene-d5	98		60-140

Project Name: CES, BROOKLYN
Project Number: 1104-15
Lab Number: L1529824
Report Date: 11/19/15

SAMPLE RESULTS

Lab ID: L1529824-02
Client ID: CES-3
Sample Location: 526 UNION AVE., BROOKLYN, NY
Matrix: Soil_Vapor
Anaytical Method: 48,TO-15
Analytical Date: 11/19/15 02:22
Analyst: RY

Date Collected: 11/12/15 12:48
Date Received: 11/13/15
Field Prep: Not Specified

Parameter	ppbV Results	ppbV RL	ppbV MDL	ug/m3 Results	ug/m3 RL	ug/m3 MDL	Qualifier	Dilution Factor
Volatile Organics in Air - Mansfield Lab								
Dichlorodifluoromethane	0.710	0.200	--	3.51	0.989	--		1
Chloromethane	ND	0.200	--	ND	0.413	--		1
Freon-114	ND	0.200	--	ND	1.40	--		1
Vinyl chloride	ND	0.200	--	ND	0.511	--		1
1,3-Butadiene	0.894	0.200	--	1.98	0.442	--		1
Bromomethane	ND	0.200	--	ND	0.777	--		1
Chloroethane	ND	0.200	--	ND	0.528	--		1
Ethanol	20.8	5.00	--	39.2	9.42	--		1
Vinyl bromide	ND	0.200	--	ND	0.874	--		1
Acetone	56.1	1.00	--	133	2.38	--		1
Trichlorofluoromethane	1.37	0.200	--	7.70	1.12	--		1
Isopropanol	7.44	0.500	--	18.3	1.23	--		1
1,1-Dichloroethene	ND	0.200	--	ND	0.793	--		1
Tertiary butyl Alcohol	24.2	0.500	--	73.4	1.52	--		1
Methylene chloride	ND	0.500	--	ND	1.74	--		1
3-Chloropropene	ND	0.200	--	ND	0.626	--		1
Carbon disulfide	ND	0.200	--	ND	0.623	--		1
Freon-113	ND	0.200	--	ND	1.53	--		1
trans-1,2-Dichloroethene	ND	0.200	--	ND	0.793	--		1
1,1-Dichloroethane	ND	0.200	--	ND	0.809	--		1
Methyl tert butyl ether	ND	0.200	--	ND	0.721	--		1
2-Butanone	6.15	0.500	--	18.1	1.47	--		1
cis-1,2-Dichloroethene	ND	0.200	--	ND	0.793	--		1
Ethyl Acetate	ND	0.500	--	ND	1.80	--		1

Project Name: CES, BROOKLYN
Project Number: 1104-15
Lab Number: L1529824
Report Date: 11/19/15

SAMPLE RESULTS

Lab ID: L1529824-02
Client ID: CES-3
Sample Location: 526 UNION AVE., BROOKLYN, NY
Date Collected: 11/12/15 12:48
Date Received: 11/13/15
Field Prep: Not Specified

Parameter	ppbV Results	ppbV RL	ppbV MDL	ug/m3 Results	ug/m3 RL	ug/m3 MDL	Qualifier	Dilution Factor
Volatile Organics in Air - Mansfield Lab								
Chloroform	ND	0.200	--	ND	0.977	--		1
Tetrahydrofuran	ND	0.500	--	ND	1.47	--		1
1,2-Dichloroethane	ND	0.200	--	ND	0.809	--		1
n-Hexane	4.31	0.200	--	15.2	0.705	--		1
1,1,1-Trichloroethane	1.09	0.200	--	5.95	1.09	--		1
Benzene	0.356	0.200	--	1.14	0.639	--		1
Carbon tetrachloride	ND	0.200	--	ND	1.26	--		1
Cyclohexane	ND	0.200	--	ND	0.688	--		1
1,2-Dichloropropane	ND	0.200	--	ND	0.924	--		1
Bromodichloromethane	ND	0.200	--	ND	1.34	--		1
1,4-Dioxane	ND	0.200	--	ND	0.721	--		1
Trichloroethene	ND	0.200	--	ND	1.07	--		1
2,2,4-Trimethylpentane	ND	0.200	--	ND	0.934	--		1
Heptane	1.12	0.200	--	4.59	0.820	--		1
cis-1,3-Dichloropropene	ND	0.200	--	ND	0.908	--		1
4-Methyl-2-pentanone	ND	0.500	--	ND	2.05	--		1
trans-1,3-Dichloropropene	ND	0.200	--	ND	0.908	--		1
1,1,2-Trichloroethane	ND	0.200	--	ND	1.09	--		1
Toluene	0.695	0.200	--	2.62	0.754	--		1
2-Hexanone	0.724	0.200	--	2.97	0.820	--		1
Dibromochloromethane	ND	0.200	--	ND	1.70	--		1
1,2-Dibromoethane	ND	0.200	--	ND	1.54	--		1
Tetrachloroethene	8.24	0.200	--	55.9	1.36	--		1
Chlorobenzene	ND	0.200	--	ND	0.921	--		1
Ethylbenzene	0.262	0.200	--	1.14	0.869	--		1
p/m-Xylene	1.04	0.400	--	4.52	1.74	--		1
Bromoform	ND	0.200	--	ND	2.07	--		1
Styrene	ND	0.200	--	ND	0.852	--		1

Project Name: CES, BROOKLYN
Project Number: 1104-15
Lab Number: L1529824
Report Date: 11/19/15

SAMPLE RESULTS

Lab ID: L1529824-02
Client ID: CES-3
Sample Location: 526 UNION AVE., BROOKLYN, NY
Date Collected: 11/12/15 12:48
Date Received: 11/13/15
Field Prep: Not Specified

Parameter	ppbV Results	ppbV RL	ppbV MDL	ug/m3 Results	ug/m3 RL	ug/m3 MDL	Qualifier	Dilution Factor
Volatile Organics in Air - Mansfield Lab								
1,1,2,2-Tetrachloroethane	ND	0.200	--	ND	1.37	--		1
o-Xylene	0.442	0.200	--	1.92	0.869	--		1
4-Ethyltoluene	0.309	0.200	--	1.52	0.983	--		1
1,3,5-Trimethylbenzene	0.390	0.200	--	1.92	0.983	--		1
1,2,4-Trimethylbenzene	1.66	0.200	--	8.16	0.983	--		1
Benzyl chloride	ND	0.200	--	ND	1.04	--		1
1,3-Dichlorobenzene	ND	0.200	--	ND	1.20	--		1
1,4-Dichlorobenzene	ND	0.200	--	ND	1.20	--		1
1,2-Dichlorobenzene	ND	0.200	--	ND	1.20	--		1
1,2,4-Trichlorobenzene	ND	0.200	--	ND	1.48	--		1
Hexachlorobutadiene	ND	0.200	--	ND	2.13	--		1

Internal Standard	% Recovery	Qualifier	Acceptance Criteria
1,4-Difluorobenzene	103		60-140
Bromochloromethane	105		60-140
chlorobenzene-d5	101		60-140

Project Name: CES, BROOKLYN
Project Number: 1104-15
Lab Number: L1529824
Report Date: 11/19/15

SAMPLE RESULTS

Lab ID: L1529824-03
Client ID: CES-2
Sample Location: 526 UNION AVE., BROOKLYN, NY
Matrix: Soil_Vapor
Anaytical Method: 48,TO-15
Analytical Date: 11/19/15 02:54
Analyst: RY

Date Collected: 11/12/15 13:19
Date Received: 11/13/15
Field Prep: Not Specified

Parameter	ppbV Results	ppbV RL	ppbV MDL	ug/m3 Results	ug/m3 RL	ug/m3 MDL	Qualifier	Dilution Factor
Volatile Organics in Air - Mansfield Lab								
Dichlorodifluoromethane	0.329	0.200	--	1.63	0.989	--		1
Chloromethane	ND	0.200	--	ND	0.413	--		1
Freon-114	ND	0.200	--	ND	1.40	--		1
Vinyl chloride	ND	0.200	--	ND	0.511	--		1
1,3-Butadiene	2.80	0.200	--	6.19	0.442	--		1
Bromomethane	ND	0.200	--	ND	0.777	--		1
Chloroethane	ND	0.200	--	ND	0.528	--		1
Ethanol	25.8	5.00	--	48.6	9.42	--		1
Vinyl bromide	ND	0.200	--	ND	0.874	--		1
Acetone	60.1	1.00	--	143	2.38	--		1
Trichlorofluoromethane	2.50	0.200	--	14.0	1.12	--		1
Isopropanol	6.09	0.500	--	15.0	1.23	--		1
1,1-Dichloroethene	ND	0.200	--	ND	0.793	--		1
Tertiary butyl Alcohol	5.92	0.500	--	17.9	1.52	--		1
Methylene chloride	ND	0.500	--	ND	1.74	--		1
3-Chloropropene	ND	0.200	--	ND	0.626	--		1
Carbon disulfide	1.20	0.200	--	3.74	0.623	--		1
Freon-113	ND	0.200	--	ND	1.53	--		1
trans-1,2-Dichloroethene	ND	0.200	--	ND	0.793	--		1
1,1-Dichloroethane	ND	0.200	--	ND	0.809	--		1
Methyl tert butyl ether	ND	0.200	--	ND	0.721	--		1
2-Butanone	7.59	0.500	--	22.4	1.47	--		1
cis-1,2-Dichloroethene	ND	0.200	--	ND	0.793	--		1
Ethyl Acetate	ND	0.500	--	ND	1.80	--		1

Project Name: CES, BROOKLYN
Project Number: 1104-15
Lab Number: L1529824
Report Date: 11/19/15

SAMPLE RESULTS

Lab ID: L1529824-03
Client ID: CES-2
Sample Location: 526 UNION AVE., BROOKLYN, NY
Date Collected: 11/12/15 13:19
Date Received: 11/13/15
Field Prep: Not Specified

Parameter	ppbV Results	ppbV RL	ppbV MDL	ug/m3 Results	ug/m3 RL	ug/m3 MDL	Qualifier	Dilution Factor
Volatile Organics in Air - Mansfield Lab								
Chloroform	0.227	0.200	--	1.11	0.977	--		1
Tetrahydrofuran	ND	0.500	--	ND	1.47	--		1
1,2-Dichloroethane	ND	0.200	--	ND	0.809	--		1
n-Hexane	0.901	0.200	--	3.18	0.705	--		1
1,1,1-Trichloroethane	ND	0.200	--	ND	1.09	--		1
Benzene	1.05	0.200	--	3.35	0.639	--		1
Carbon tetrachloride	ND	0.200	--	ND	1.26	--		1
Cyclohexane	ND	0.200	--	ND	0.688	--		1
1,2-Dichloropropane	ND	0.200	--	ND	0.924	--		1
Bromodichloromethane	ND	0.200	--	ND	1.34	--		1
1,4-Dioxane	ND	0.200	--	ND	0.721	--		1
Trichloroethene	0.788	0.200	--	4.23	1.07	--		1
2,2,4-Trimethylpentane	0.226	0.200	--	1.06	0.934	--		1
Heptane	0.661	0.200	--	2.71	0.820	--		1
cis-1,3-Dichloropropene	ND	0.200	--	ND	0.908	--		1
4-Methyl-2-pentanone	ND	0.500	--	ND	2.05	--		1
trans-1,3-Dichloropropene	ND	0.200	--	ND	0.908	--		1
1,1,2-Trichloroethane	ND	0.200	--	ND	1.09	--		1
Toluene	3.42	0.200	--	12.9	0.754	--		1
2-Hexanone	0.646	0.200	--	2.65	0.820	--		1
Dibromochloromethane	ND	0.200	--	ND	1.70	--		1
1,2-Dibromoethane	ND	0.200	--	ND	1.54	--		1
Tetrachloroethene	1.19	0.200	--	8.07	1.36	--		1
Chlorobenzene	ND	0.200	--	ND	0.921	--		1
Ethylbenzene	1.02	0.200	--	4.43	0.869	--		1
p/m-Xylene	3.62	0.400	--	15.7	1.74	--		1
Bromoform	ND	0.200	--	ND	2.07	--		1
Styrene	ND	0.200	--	ND	0.852	--		1

Project Name: CES, BROOKLYN
Project Number: 1104-15
Lab Number: L1529824
Report Date: 11/19/15

SAMPLE RESULTS

Lab ID: L1529824-03
Client ID: CES-2
Sample Location: 526 UNION AVE., BROOKLYN, NY
Date Collected: 11/12/15 13:19
Date Received: 11/13/15
Field Prep: Not Specified

Parameter	ppbV Results	ppbV RL	ppbV MDL	ug/m3 Results	ug/m3 RL	ug/m3 MDL	Qualifier	Dilution Factor
Volatile Organics in Air - Mansfield Lab								
1,1,2,2-Tetrachloroethane	ND	0.200	--	ND	1.37	--		1
o-Xylene	1.24	0.200	--	5.39	0.869	--		1
4-Ethyltoluene	0.475	0.200	--	2.34	0.983	--		1
1,3,5-Trimethylbenzene	0.454	0.200	--	2.23	0.983	--		1
1,2,4-Trimethylbenzene	1.70	0.200	--	8.36	0.983	--		1
Benzyl chloride	ND	0.200	--	ND	1.04	--		1
1,3-Dichlorobenzene	ND	0.200	--	ND	1.20	--		1
1,4-Dichlorobenzene	ND	0.200	--	ND	1.20	--		1
1,2-Dichlorobenzene	ND	0.200	--	ND	1.20	--		1
1,2,4-Trichlorobenzene	ND	0.200	--	ND	1.48	--		1
Hexachlorobutadiene	ND	0.200	--	ND	2.13	--		1

Internal Standard	% Recovery	Qualifier	Acceptance Criteria
1,4-Difluorobenzene	95		60-140
Bromochloromethane	100		60-140
chlorobenzene-d5	103		60-140

Project Name: CES, BROOKLYN
Project Number: 1104-15
Lab Number: L1529824
Report Date: 11/19/15

SAMPLE RESULTS

Lab ID: L1529824-04 D
Client ID: CES-4
Sample Location: 526 UNION AVE., BROOKLYN, NY
Matrix: Soil_Vapor
Anaytical Method: 48,TO-15
Analytical Date: 11/19/15 03:26
Analyst: RY

Date Collected: 11/12/15 13:48
Date Received: 11/13/15
Field Prep: Not Specified

Parameter	ppbV Results	ppbV RL	ppbV MDL	ug/m3 Results	ug/m3 RL	ug/m3 MDL	Qualifier	Dilution Factor
Volatile Organics in Air - Mansfield Lab								
Dichlorodifluoromethane	0.786	0.400	--	3.89	1.98	--		2
Chloromethane	ND	0.400	--	ND	0.826	--		2
Freon-114	ND	0.400	--	ND	2.80	--		2
Vinyl chloride	ND	0.400	--	ND	1.02	--		2
1,3-Butadiene	7.46	0.400	--	16.5	0.885	--		2
Bromomethane	ND	0.400	--	ND	1.55	--		2
Chloroethane	ND	0.400	--	ND	1.06	--		2
Ethanol	20.6	10.0	--	38.8	18.8	--		2
Vinyl bromide	ND	0.400	--	ND	1.75	--		2
Acetone	56.3	2.00	--	134	4.75	--		2
Trichlorofluoromethane	6.60	0.400	--	37.1	2.25	--		2
Isopropanol	3.21	1.00	--	7.89	2.46	--		2
1,1-Dichloroethene	ND	0.400	--	ND	1.59	--		2
Tertiary butyl Alcohol	2.88	1.00	--	8.73	3.03	--		2
Methylene chloride	ND	1.00	--	ND	3.47	--		2
3-Chloropropene	ND	0.400	--	ND	1.25	--		2
Carbon disulfide	3.67	0.400	--	11.4	1.25	--		2
Freon-113	ND	0.400	--	ND	3.07	--		2
trans-1,2-Dichloroethene	ND	0.400	--	ND	1.59	--		2
1,1-Dichloroethane	ND	0.400	--	ND	1.62	--		2
Methyl tert butyl ether	ND	0.400	--	ND	1.44	--		2
2-Butanone	8.60	1.00	--	25.4	2.95	--		2
cis-1,2-Dichloroethene	ND	0.400	--	ND	1.59	--		2
Ethyl Acetate	ND	1.00	--	ND	3.60	--		2

Project Name: CES, BROOKLYN
Project Number: 1104-15
Lab Number: L1529824
Report Date: 11/19/15

SAMPLE RESULTS

Lab ID: L1529824-04 D
Client ID: CES-4
Sample Location: 526 UNION AVE., BROOKLYN, NY
Date Collected: 11/12/15 13:48
Date Received: 11/13/15
Field Prep: Not Specified

Parameter	ppbV Results	ppbV RL	ppbV MDL	ug/m3 Results	ug/m3 RL	ug/m3 MDL	Qualifier	Dilution Factor
Volatile Organics in Air - Mansfield Lab								
Chloroform	ND	0.400	--	ND	1.95	--		2
Tetrahydrofuran	ND	1.00	--	ND	2.95	--		2
1,2-Dichloroethane	ND	0.400	--	ND	1.62	--		2
n-Hexane	12.9	0.400	--	45.5	1.41	--		2
1,1,1-Trichloroethane	ND	0.400	--	ND	2.18	--		2
Benzene	2.03	0.400	--	6.49	1.28	--		2
Carbon tetrachloride	ND	0.400	--	ND	2.52	--		2
Cyclohexane	45.0	0.400	--	155	1.38	--		2
1,2-Dichloropropane	ND	0.400	--	ND	1.85	--		2
Bromodichloromethane	ND	0.400	--	ND	2.68	--		2
1,4-Dioxane	ND	0.400	--	ND	1.44	--		2
Trichloroethene	ND	0.400	--	ND	2.15	--		2
2,2,4-Trimethylpentane	ND	0.400	--	ND	1.87	--		2
Heptane	19.5	0.400	--	79.9	1.64	--		2
cis-1,3-Dichloropropene	ND	0.400	--	ND	1.82	--		2
4-Methyl-2-pentanone	ND	1.00	--	ND	4.10	--		2
trans-1,3-Dichloropropene	ND	0.400	--	ND	1.82	--		2
1,1,2-Trichloroethane	ND	0.400	--	ND	2.18	--		2
Toluene	1.28	0.400	--	4.82	1.51	--		2
2-Hexanone	ND	0.400	--	ND	1.64	--		2
Dibromochloromethane	ND	0.400	--	ND	3.41	--		2
1,2-Dibromoethane	ND	0.400	--	ND	3.07	--		2
Tetrachloroethene	3.20	0.400	--	21.7	2.71	--		2
Chlorobenzene	ND	0.400	--	ND	1.84	--		2
Ethylbenzene	ND	0.400	--	ND	1.74	--		2
p/m-Xylene	ND	0.800	--	ND	3.47	--		2
Bromoform	ND	0.400	--	ND	4.14	--		2
Styrene	ND	0.400	--	ND	1.70	--		2

Project Name: CES, BROOKLYN
Project Number: 1104-15
Lab Number: L1529824
Report Date: 11/19/15

SAMPLE RESULTS

Lab ID: L1529824-04 D
Client ID: CES-4
Sample Location: 526 UNION AVE., BROOKLYN, NY
Date Collected: 11/12/15 13:48
Date Received: 11/13/15
Field Prep: Not Specified

Parameter	ppbV Results	ppbV RL	ppbV MDL	ug/m3 Results	ug/m3 RL	ug/m3 MDL	Qualifier	Dilution Factor
Volatile Organics in Air - Mansfield Lab								
1,1,2,2-Tetrachloroethane	ND	0.400	--	ND	2.75	--		2
o-Xylene	ND	0.400	--	ND	1.74	--		2
4-Ethyltoluene	ND	0.400	--	ND	1.97	--		2
1,3,5-Trimethylbenzene	ND	0.400	--	ND	1.97	--		2
1,2,4-Trimethylbenzene	0.522	0.400	--	2.57	1.97	--		2
Benzyl chloride	ND	0.400	--	ND	2.07	--		2
1,3-Dichlorobenzene	ND	0.400	--	ND	2.40	--		2
1,4-Dichlorobenzene	ND	0.400	--	ND	2.40	--		2
1,2-Dichlorobenzene	ND	0.400	--	ND	2.40	--		2
1,2,4-Trichlorobenzene	ND	0.400	--	ND	2.97	--		2
Hexachlorobutadiene	ND	0.400	--	ND	4.27	--		2

Internal Standard	% Recovery	Qualifier	Acceptance Criteria
1,4-Difluorobenzene	103		60-140
Bromochloromethane	105		60-140
chlorobenzene-d5	111		60-140

Project Name: CES, BROOKLYN
Project Number: 1104-15
Lab Number: L1529824
Report Date: 11/19/15

Method Blank Analysis
Batch Quality Control

Analytical Method: 48,TO-15
Analytical Date: 11/18/15 13:41

Parameter	ppbV Results	ppbV RL	ppbV MDL	ug/m3 Results	ug/m3 RL	ug/m3 MDL	Qualifier	Dilution Factor
Volatile Organics in Air - Mansfield Lab for sample(s): 01-04 Batch: WG842057-4								
Propylene	ND	0.500	--	ND	0.861	--		1
Dichlorodifluoromethane	ND	0.200	--	ND	0.989	--		1
Chloromethane	ND	0.200	--	ND	0.413	--		1
Freon-114	ND	0.200	--	ND	1.40	--		1
Vinyl chloride	ND	0.200	--	ND	0.511	--		1
1,3-Butadiene	ND	0.200	--	ND	0.442	--		1
Bromomethane	ND	0.200	--	ND	0.777	--		1
Chloroethane	ND	0.200	--	ND	0.528	--		1
Ethanol	ND	5.00	--	ND	9.42	--		1
Vinyl bromide	ND	0.200	--	ND	0.874	--		1
Acetone	ND	1.00	--	ND	2.38	--		1
Trichlorofluoromethane	ND	0.200	--	ND	1.12	--		1
Isopropanol	ND	0.500	--	ND	1.23	--		1
1,1-Dichloroethene	ND	0.200	--	ND	0.793	--		1
Tertiary butyl Alcohol	ND	0.500	--	ND	1.52	--		1
Methylene chloride	ND	0.500	--	ND	1.74	--		1
3-Chloropropene	ND	0.200	--	ND	0.626	--		1
Carbon disulfide	ND	0.200	--	ND	0.623	--		1
Freon-113	ND	0.200	--	ND	1.53	--		1
trans-1,2-Dichloroethene	ND	0.200	--	ND	0.793	--		1
1,1-Dichloroethane	ND	0.200	--	ND	0.809	--		1
Methyl tert butyl ether	ND	0.200	--	ND	0.721	--		1
Vinyl acetate	ND	1.00	--	ND	3.52	--		1
2-Butanone	ND	0.500	--	ND	1.47	--		1
cis-1,2-Dichloroethene	ND	0.200	--	ND	0.793	--		1

Project Name: CES, BROOKLYN
Project Number: 1104-15
Lab Number: L1529824
Report Date: 11/19/15

Method Blank Analysis
Batch Quality Control

Analytical Method: 48,TO-15
Analytical Date: 11/18/15 13:41

Parameter	ppbV Results	ppbV RL	ppbV MDL	ug/m3 Results	ug/m3 RL	ug/m3 MDL	Qualifier	Dilution Factor
Volatile Organics in Air - Mansfield Lab for sample(s): 01-04 Batch: WG842057-4								
Ethyl Acetate	ND	0.500	--	ND	1.80	--		1
Chloroform	ND	0.200	--	ND	0.977	--		1
Tetrahydrofuran	ND	0.500	--	ND	1.47	--		1
1,2-Dichloroethane	ND	0.200	--	ND	0.809	--		1
n-Hexane	ND	0.200	--	ND	0.705	--		1
1,1,1-Trichloroethane	ND	0.200	--	ND	1.09	--		1
Benzene	ND	0.200	--	ND	0.639	--		1
Carbon tetrachloride	ND	0.200	--	ND	1.26	--		1
Cyclohexane	ND	0.200	--	ND	0.688	--		1
1,2-Dichloropropane	ND	0.200	--	ND	0.924	--		1
Bromodichloromethane	ND	0.200	--	ND	1.34	--		1
1,4-Dioxane	ND	0.200	--	ND	0.721	--		1
Trichloroethene	ND	0.200	--	ND	1.07	--		1
2,2,4-Trimethylpentane	ND	0.200	--	ND	0.934	--		1
Heptane	ND	0.200	--	ND	0.820	--		1
cis-1,3-Dichloropropene	ND	0.200	--	ND	0.908	--		1
4-Methyl-2-pentanone	ND	0.500	--	ND	2.05	--		1
trans-1,3-Dichloropropene	ND	0.200	--	ND	0.908	--		1
1,1,2-Trichloroethane	ND	0.200	--	ND	1.09	--		1
Toluene	ND	0.200	--	ND	0.754	--		1
2-Hexanone	ND	0.200	--	ND	0.820	--		1
Dibromochloromethane	ND	0.200	--	ND	1.70	--		1
1,2-Dibromoethane	ND	0.200	--	ND	1.54	--		1
Tetrachloroethene	ND	0.200	--	ND	1.36	--		1
Chlorobenzene	ND	0.200	--	ND	0.921	--		1

Project Name: CES, BROOKLYN
Project Number: 1104-15
Lab Number: L1529824
Report Date: 11/19/15

Method Blank Analysis
Batch Quality Control

Analytical Method: 48,TO-15
Analytical Date: 11/18/15 13:41

Parameter	ppbV Results	ppbV RL	ppbV MDL	ug/m3 Results	ug/m3 RL	ug/m3 MDL	Qualifier	Dilution Factor
Volatile Organics in Air - Mansfield Lab for sample(s): 01-04 Batch: WG842057-4								
Ethylbenzene	ND	0.200	--	ND	0.869	--		1
p/m-Xylene	ND	0.400	--	ND	1.74	--		1
Bromoform	ND	0.200	--	ND	2.07	--		1
Styrene	ND	0.200	--	ND	0.852	--		1
1,1,2,2-Tetrachloroethane	ND	0.200	--	ND	1.37	--		1
o-Xylene	ND	0.200	--	ND	0.869	--		1
4-Ethyltoluene	ND	0.200	--	ND	0.983	--		1
1,3,5-Trimethylbenzene	ND	0.200	--	ND	0.983	--		1
1,2,4-Trimethylbenzene	ND	0.200	--	ND	0.983	--		1
Benzyl chloride	ND	0.200	--	ND	1.04	--		1
1,3-Dichlorobenzene	ND	0.200	--	ND	1.20	--		1
1,4-Dichlorobenzene	ND	0.200	--	ND	1.20	--		1
1,2-Dichlorobenzene	ND	0.200	--	ND	1.20	--		1
1,2,4-Trichlorobenzene	ND	0.200	--	ND	1.48	--		1
Hexachlorobutadiene	ND	0.200	--	ND	2.13	--		1

	Results	Qualifier	Units	RDL	Dilution Factor
Tentatively Identified Compounds					
No Tentatively Identified Compounds					

Lab Control Sample Analysis
Batch Quality Control

Project Name: CES, BROOKLYN
Project Number: 1104-15

Lab Number: L1529824
Report Date: 11/19/15

Parameter	LCS %Recovery	Qual	LCSD %Recovery	Qual	%Recovery Limits	RPD	Qual	RPD Limits
Volatile Organics in Air - Mansfield Lab Associated sample(s): 01-04 Batch: WG842057-3								
Chlorodifluoromethane	89		-		70-130	-		
Propylene	88		-		70-130	-		
Propane	74		-		70-130	-		
Dichlorodifluoromethane	113		-		70-130	-		
Chloromethane	83		-		70-130	-		
1,2-Dichloro-1,1,2,2-tetrafluoroethane	106		-		70-130	-		
Vinyl chloride	88		-		70-130	-		
1,3-Butadiene	82		-		70-130	-		
Butane	78		-		70-130	-		
Bromomethane	97		-		70-130	-		
Chloroethane	86		-		70-130	-		
Ethyl Alcohol	73		-		70-130	-		
Dichlorofluoromethane	90		-		70-130	-		
Vinyl bromide	98		-		70-130	-		
Acrolein	83		-		70-130	-		
Acetone	92		-		70-130	-		
Acetonitrile	79		-		70-130	-		
Trichlorofluoromethane	116		-		70-130	-		
iso-Propyl Alcohol	85		-		70-130	-		
Acrylonitrile	78		-		70-130	-		
Pentane	78		-		70-130	-		

Lab Control Sample Analysis
Batch Quality Control

Project Name: CES, BROOKLYN
Project Number: 1104-15

Lab Number: L1529824
Report Date: 11/19/15

Parameter	LCS %Recovery	Qual	LCSD %Recovery	Qual	%Recovery Limits	RPD	Qual	RPD Limits
Volatile Organics in Air - Mansfield Lab Associated sample(s): 01-04 Batch: WG842057-3								
1,1-Dichloroethene	97		-		70-130	-		
tert-Butyl Alcohol	90		-		70-130	-		
Methylene chloride	90		-		70-130	-		
3-Chloropropene	86		-		70-130	-		
Carbon disulfide	88		-		70-130	-		
1,1,2-Trichloro-1,2,2-Trifluoroethane	104		-		70-130	-		
trans-1,2-Dichloroethene	93		-		70-130	-		
1,1-Dichloroethane	101		-		70-130	-		
Methyl tert butyl ether	101		-		70-130	-		
Vinyl acetate	102		-		70-130	-		
2-Butanone	94		-		70-130	-		
cis-1,2-Dichloroethene	115		-		70-130	-		
Ethyl Acetate	100		-		70-130	-		
Chloroform	111		-		70-130	-		
Tetrahydrofuran	85		-		70-130	-		
2,2-Dichloropropane	96		-		70-130	-		
1,2-Dichloroethane	112		-		70-130	-		
n-Hexane	80		-		70-130	-		
Isopropyl Ether	86		-		70-130	-		
Ethyl-Tert-Butyl-Ether	82		-		70-130	-		
1,1,1-Trichloroethane	102		-		70-130	-		

Lab Control Sample Analysis
Batch Quality Control

Project Name: CES, BROOKLYN
Project Number: 1104-15

Lab Number: L1529824
Report Date: 11/19/15

Parameter	LCS %Recovery	Qual	LCSD %Recovery	Qual	%Recovery Limits	RPD	Qual	RPD Limits
Volatile Organics in Air - Mansfield Lab Associated sample(s): 01-04 Batch: WG842057-3								
1,1-Dichloropropene	93		-		70-130	-		
Benzene	89		-		70-130	-		
Carbon tetrachloride	106		-		70-130	-		
Cyclohexane	79		-		70-130	-		
Tertiary-Amyl Methyl Ether	85		-		70-130	-		
Dibromomethane	92		-		70-130	-		
1,2-Dichloropropane	89		-		70-130	-		
Bromodichloromethane	97		-		70-130	-		
1,4-Dioxane	94		-		70-130	-		
Trichloroethene	105		-		70-130	-		
2,2,4-Trimethylpentane	84		-		70-130	-		
Methyl Methacrylate	79		-		70-130	-		
Heptane	80		-		70-130	-		
cis-1,3-Dichloropropene	101		-		70-130	-		
4-Methyl-2-pentanone	85		-		70-130	-		
trans-1,3-Dichloropropene	88		-		70-130	-		
1,1,2-Trichloroethane	96		-		70-130	-		
Toluene	102		-		70-130	-		
1,3-Dichloropropane	98		-		70-130	-		
2-Hexanone	95		-		70-130	-		
Dibromochloromethane	110		-		70-130	-		

Lab Control Sample Analysis
Batch Quality Control

Project Name: CES, BROOKLYN
Project Number: 1104-15

Lab Number: L1529824
Report Date: 11/19/15

Parameter	LCS %Recovery	Qual	LCSD %Recovery	Qual	%Recovery Limits	RPD	Qual	RPD Limits
Volatile Organics in Air - Mansfield Lab Associated sample(s): 01-04 Batch: WG842057-3								
1,2-Dibromoethane	109		-		70-130	-		
Butyl Acetate	89		-		70-130	-		
Octane	96		-		70-130	-		
Tetrachloroethene	112		-		70-130	-		
1,1,1,2-Tetrachloroethane	105		-		70-130	-		
Chlorobenzene	109		-		70-130	-		
Ethylbenzene	106		-		70-130	-		
p/m-Xylene	108		-		70-130	-		
Bromoform	116		-		70-130	-		
Styrene	106		-		70-130	-		
1,1,2,2-Tetrachloroethane	107		-		70-130	-		
o-Xylene	109		-		70-130	-		
1,2,3-Trichloropropane	100		-		70-130	-		
Nonane (C9)	84		-		70-130	-		
Isopropylbenzene	105		-		70-130	-		
Bromobenzene	101		-		70-130	-		
o-Chlorotoluene	103		-		70-130	-		
n-Propylbenzene	105		-		70-130	-		
p-Chlorotoluene	106		-		70-130	-		
4-Ethyltoluene	104		-		70-130	-		
1,3,5-Trimethylbenzene	112		-		70-130	-		

Lab Control Sample Analysis
Batch Quality Control

Project Name: CES, BROOKLYN
Project Number: 1104-15

Lab Number: L1529824
Report Date: 11/19/15

Parameter	LCS %Recovery	Qual	LCSD %Recovery	Qual	%Recovery Limits	RPD	Qual	RPD Limits
Volatile Organics in Air - Mansfield Lab Associated sample(s): 01-04 Batch: WG842057-3								
tert-Butylbenzene	107		-		70-130	-		
1,2,4-Trimethylbenzene	116		-		70-130	-		
Decane (C10)	94		-		70-130	-		
Benzyl chloride	105		-		70-130	-		
1,3-Dichlorobenzene	121		-		70-130	-		
1,4-Dichlorobenzene	117		-		70-130	-		
sec-Butylbenzene	100		-		70-130	-		
p-Isopropyltoluene	102		-		70-130	-		
1,2-Dichlorobenzene	120		-		70-130	-		
n-Butylbenzene	109		-		70-130	-		
1,2-Dibromo-3-chloropropane	108		-		70-130	-		
Undecane	102		-		70-130	-		
Dodecane (C12)	114		-		70-130	-		
1,2,4-Trichlorobenzene	**153**	Q	-		70-130	-		
Naphthalene	130		-		70-130	-		
1,2,3-Trichlorobenzene	**141**	Q	-		70-130	-		
Hexachlorobutadiene	**154**	Q	-		70-130	-		

Lab Duplicate Analysis
Batch Quality Control

Project Name: CES, BROOKLYN
Project Number: 1104-15

Lab Number: L1529824
Report Date: 11/19/15

Parameter	Native Sample	Duplicate Sample	Units	RPD	Qual	RPD Limits
Volatile Organics in Air - Mansfield Lab Associated sample(s): 01-04 QC Batch ID: WG842057-5 QC Sample: L1529824-01 Client ID: CES-1						
Dichlorodifluoromethane	0.250	0.237	ppbV	5		25
Chloromethane	ND	ND	ppbV	NC		25
Freon-114	ND	ND	ppbV	NC		25
Vinyl chloride	ND	ND	ppbV	NC		25
1,3-Butadiene	1.28	1.28	ppbV	0		25
Bromomethane	ND	ND	ppbV	NC		25
Chloroethane	ND	ND	ppbV	NC		25
Ethanol	25.0	25.4	ppbV	2		25
Vinyl bromide	ND	ND	ppbV	NC		25
Acetone	43.3	44.0	ppbV	2		25
Trichlorofluoromethane	5.20	5.22	ppbV	0		25
Isopropanol	6.64	6.84	ppbV	3		25
1,1-Dichloroethene	ND	ND	ppbV	NC		25
Tertiary butyl Alcohol	13.7	13.6	ppbV	1		25
Methylene chloride	ND	ND	ppbV	NC		25
3-Chloropropene	ND	ND	ppbV	NC		25
Carbon disulfide	0.807	0.792	ppbV	2		25
Freon-113	ND	ND	ppbV	NC		25
trans-1,2-Dichloroethene	ND	ND	ppbV	NC		25

Lab Duplicate Analysis
Batch Quality Control

Project Name: CES, BROOKLYN
Project Number: 1104-15

Lab Number: L1529824
Report Date: 11/19/15

Parameter	Native Sample	Duplicate Sample	Units	RPD	RPD Limits
Volatile Organics in Air - Mansfield Lab Associated sample(s): 01-04 QC Batch ID: WG842057-5 QC Sample: L1529824-01 Client ID: CES-1					
1,1-Dichloroethane	ND	ND	ppbV	NC	25
Methyl tert butyl ether	ND	ND	ppbV	NC	25
2-Butanone	5.61	5.63	ppbV	0	25
cis-1,2-Dichloroethene	ND	ND	ppbV	NC	25
Ethyl Acetate	ND	ND	ppbV	NC	25
Chloroform	0.715	0.735	ppbV	3	25
Tetrahydrofuran	ND	ND	ppbV	NC	25
1,2-Dichloroethane	ND	ND	ppbV	NC	25
n-Hexane	0.210	0.229	ppbV	9	25
1,1,1-Trichloroethane	2.26	2.31	ppbV	2	25
Benzene	0.375	0.396	ppbV	5	25
Carbon tetrachloride	ND	ND	ppbV	NC	25
Cyclohexane	ND	ND	ppbV	NC	25
1,2-Dichloropropane	ND	ND	ppbV	NC	25
Bromodichloromethane	ND	ND	ppbV	NC	25
1,4-Dioxane	ND	ND	ppbV	NC	25
Trichloroethene	ND	ND	ppbV	NC	25
2,2,4-Trimethylpentane	ND	ND	ppbV	NC	25
Heptane	ND	ND	ppbV	NC	25

Lab Duplicate Analysis
Batch Quality Control

Project Name: CES, BROOKLYN
Project Number: 1104-15

Lab Number: L1529824
Report Date: 11/19/15

Parameter	Native Sample	Duplicate Sample	Units	RPD	RPD Limits
Volatile Organics in Air - Mansfield Lab Associated sample(s): 01-04 QC Batch ID: WG842057-5 QC Sample: L1529824-01 Client ID: CES-1					
cis-1,3-Dichloropropene	ND	ND	ppbV	NC	25
4-Methyl-2-pentanone	ND	ND	ppbV	NC	25
trans-1,3-Dichloropropene	ND	ND	ppbV	NC	25
1,1,2-Trichloroethane	ND	ND	ppbV	NC	25
Toluene	0.434	0.422	ppbV	3	25
2-Hexanone	0.736	0.713	ppbV	3	25
Dibromochloromethane	ND	ND	ppbV	NC	25
1,2-Dibromoethane	ND	ND	ppbV	NC	25
Tetrachloroethene	4.68	4.71	ppbV	1	25
Chlorobenzene	ND	ND	ppbV	NC	25
Ethylbenzene	ND	ND	ppbV	NC	25
p/m-Xylene	ND	ND	ppbV	NC	25
Bromoform	ND	ND	ppbV	NC	25
Styrene	ND	ND	ppbV	NC	25
1,1,2,2-Tetrachloroethane	ND	ND	ppbV	NC	25
o-Xylene	ND	ND	ppbV	NC	25
4-Ethyltoluene	ND	ND	ppbV	NC	25
1,3,5-Trimethylbenzene	ND	ND	ppbV	NC	25
1,2,4-Trimethylbenzene	0.406	0.410	ppbV	1	25

Lab Duplicate Analysis
Batch Quality Control

Project Name: CES, BROOKLYN
Project Number: 1104-15

Lab Number: L1529824
Report Date: 11/19/15

Parameter	Native Sample	Duplicate Sample	Units	RPD	RPD Limits
Volatile Organics in Air - Mansfield Lab Associated sample(s): 01-04 QC Batch ID: WG842057-5 QC Sample: L1529824-01 Client ID: CES-1					
Benzyl chloride	ND	ND	ppbV	NC	25
1,3-Dichlorobenzene	ND	ND	ppbV	NC	25
1,4-Dichlorobenzene	ND	ND	ppbV	NC	25
1,2-Dichlorobenzene	ND	ND	ppbV	NC	25
1,2,4-Trichlorobenzene	ND	ND	ppbV	NC	25
Hexachlorobutadiene	ND	ND	ppbV	NC	25

Project Name: CES, BROOKLYN

Lab Number: L1529824

Project Number: 1104-15

Report Date: 11/19/15

Canister and Flow Controller Information

Samplenum	Client ID	Media ID	Media Type	Date Prepared	Bottle Order	Cleaning Batch ID	Can Leak Check	Initial Pressure (in. Hg)	Pressure on Receipt (in. Hg)	Flow Controler Leak Chk	Flow Out mL/min	Flow In mL/min	% RPD
L1529824-01	CES-1	0535	SV200	11/11/15	212661		-	-	-	Pass	210	216	3
L1529824-01	CES-1	347	2.7L Can	11/11/15	212661	L1529059-01	Pass	-30.0	0.6	-	-	-	-
L1529824-02	CES-3	0602	SV200	11/11/15	212661		-	-	-	Pass	215	213	1
L1529824-02	CES-3	374	2.7L Can	11/11/15	212661	L1529059-01	Pass	-30.0	0.6	-	-	-	-
L1529824-03	CES-2	0540	SV200	11/11/15	212661		-	-	-	Pass	215	216	0
L1529824-03	CES-2	548	2.7L Can	11/11/15	212661	L1529059-01	Pass	-30.0	0.5	-	-	-	-
L1529824-04	CES-4	0690	SV200	11/11/15	212661		-	-	-	Pass	226	215	5
L1529824-04	CES-4	335	2.7L Can	11/11/15	212661	L1529059-01	Pass	-30.0	0.6	-	-	-	-

Project Name: BATCH CANISTER CERTIFICATION **Lab Number:** L1529059

Project Number: CANISTER QC BAT **Report Date:** 11/19/15

Air Canister Certification Results

Lab ID:	L1529059-01	Date Collected:	11/06/15 18:00
Client ID:	CAN 2030 SHELF 1	Date Received:	11/09/15
Sample Location:		Field Prep:	Not Specified
Matrix:	Air		
Anaytical Method:	48,TO-15		
Analytical Date:	11/09/15 16:00		
Analyst:	MB		

	ppbV			ug/m3				
Parameter	**Results**	**RL**	**MDL**	**Results**	**RL**	**MDL**	**Qualifier**	**Dilution Factor**
Volatile Organics in Air - Mansfield Lab								
Chlorodifluoromethane	ND	0.200	--	ND	0.707	--		1
Propylene	ND	0.500	--	ND	0.861	--		1
Propane	ND	0.500	--	ND	0.902	--		1
Dichlorodifluoromethane	ND	0.200	--	ND	0.989	--		1
Chloromethane	ND	0.200	--	ND	0.413	--		1
Freon-114	ND	0.200	--	ND	1.40	--		1
Methanol	ND	5.00	--	ND	6.55	--		1
Vinyl chloride	ND	0.200	--	ND	0.511	--		1
1,3-Butadiene	ND	0.200	--	ND	0.442	--		1
Butane	ND	0.200	--	ND	0.475	--		1
Bromomethane	ND	0.200	--	ND	0.777	--		1
Chloroethane	ND	0.200	--	ND	0.528	--		1
Ethanol	ND	5.00	--	ND	9.42	--		1
Dichlorofluoromethane	ND	0.200	--	ND	0.842	--		1
Vinyl bromide	ND	0.200	--	ND	0.874	--		1
Acrolein	ND	0.500	--	ND	1.15	--		1
Acetone	ND	1.00	--	ND	2.38	--		1
Acetonitrile	ND	0.200	--	ND	0.336	--		1
Trichlorofluoromethane	ND	0.200	--	ND	1.12	--		1
Isopropanol	ND	0.500	--	ND	1.23	--		1
Acrylonitrile	ND	0.500	--	ND	1.09	--		1
Pentane	ND	0.200	--	ND	0.590	--		1
1,1-Dichloroethene	ND	0.200	--	ND	0.793	--		1
Tertiary butyl Alcohol	ND	0.500	--	ND	1.52	--		1
Methylene chloride	ND	0.500	--	ND	1.74	--		1

Project Name: BATCH CANISTER CERTIFICATION **Lab Number:** L1529059

Project Number: CANISTER QC BAT **Report Date:** 11/19/15

Air Canister Certification Results

Lab ID: L1529059-01 Date Collected: 11/06/15 18:00

Client ID: CAN 2030 SHELF 1 Date Received: 11/09/15

Sample Location: Field Prep: Not Specified

Parameter	ppbV Results	ppbV RL	ppbV MDL	ug/m3 Results	ug/m3 RL	ug/m3 MDL	Qualifier	Dilution Factor
Volatile Organics in Air - Mansfield Lab								
3-Chloropropene	ND	0.200	--	ND	0.626	--		1
Carbon disulfide	ND	0.200	--	ND	0.623	--		1
Freon-113	ND	0.200	--	ND	1.53	--		1
trans-1,2-Dichloroethene	ND	0.200	--	ND	0.793	--		1
1,1-Dichloroethane	ND	0.200	--	ND	0.809	--		1
Methyl tert butyl ether	ND	0.200	--	ND	0.721	--		1
Vinyl acetate	ND	1.00	--	ND	3.52	--		1
2-Butanone	ND	0.500	--	ND	1.47	--		1
cis-1,2-Dichloroethene	ND	0.200	--	ND	0.793	--		1
Ethyl Acetate	ND	0.500	--	ND	1.80	--		1
Chloroform	ND	0.200	--	ND	0.977	--		1
Tetrahydrofuran	ND	0.500	--	ND	1.47	--		1
2,2-Dichloropropane	ND	0.200	--	ND	0.924	--		1
1,2-Dichloroethane	ND	0.200	--	ND	0.809	--		1
n-Hexane	ND	0.200	--	ND	0.705	--		1
Diisopropyl ether	ND	0.200	--	ND	0.836	--		1
tert-Butyl Ethyl Ether	ND	0.200	--	ND	0.836	--		1
1,1,1-Trichloroethane	ND	0.200	--	ND	1.09	--		1
1,1-Dichloropropene	ND	0.200	--	ND	0.908	--		1
Benzene	ND	0.200	--	ND	0.639	--		1
Carbon tetrachloride	ND	0.200	--	ND	1.26	--		1
Cyclohexane	ND	0.200	--	ND	0.688	--		1
tert-Amyl Methyl Ether	ND	0.200	--	ND	0.836	--		1
Dibromomethane	ND	0.200	--	ND	1.42	--		1
1,2-Dichloropropane	ND	0.200	--	ND	0.924	--		1
Bromodichloromethane	ND	0.200	--	ND	1.34	--		1
1,4-Dioxane	ND	0.200	--	ND	0.721	--		1
Trichloroethene	ND	0.200	--	ND	1.07	--		1

Project Name: BATCH CANISTER CERTIFICATION **Lab Number:** L1529059

Project Number: CANISTER QC BAT **Report Date:** 11/19/15

Air Canister Certification Results

Lab ID: L1529059-01 Date Collected: 11/06/15 18:00

Client ID: CAN 2030 SHELF 1 Date Received: 11/09/15

Sample Location: Field Prep: Not Specified

Parameter	ppbV Results	ppbV RL	ppbV MDL	ug/m3 Results	ug/m3 RL	ug/m3 MDL	Qualifier	Dilution Factor
Volatile Organics in Air - Mansfield Lab								
2,2,4-Trimethylpentane	ND	0.200	--	ND	0.934	--		1
Methyl Methacrylate	ND	0.500	--	ND	2.05	--		1
Heptane	ND	0.200	--	ND	0.820	--		1
cis-1,3-Dichloropropene	ND	0.200	--	ND	0.908	--		1
4-Methyl-2-pentanone	ND	0.500	--	ND	2.05	--		1
trans-1,3-Dichloropropene	ND	0.200	--	ND	0.908	--		1
1,1,2-Trichloroethane	ND	0.200	--	ND	1.09	--		1
Toluene	ND	0.200	--	ND	0.754	--		1
1,3-Dichloropropane	ND	0.200	--	ND	0.924	--		1
2-Hexanone	ND	0.200	--	ND	0.820	--		1
Dibromochloromethane	ND	0.200	--	ND	1.70	--		1
1,2-Dibromoethane	ND	0.200	--	ND	1.54	--		1
Butyl acetate	ND	0.500	--	ND	2.38	--		1
Octane	ND	0.200	--	ND	0.934	--		1
Tetrachloroethene	ND	0.200	--	ND	1.36	--		1
1,1,1,2-Tetrachloroethane	ND	0.200	--	ND	1.37	--		1
Chlorobenzene	ND	0.200	--	ND	0.921	--		1
Ethylbenzene	ND	0.200	--	ND	0.869	--		1
p/m-Xylene	ND	0.400	--	ND	1.74	--		1
Bromoform	ND	0.200	--	ND	2.07	--		1
Styrene	ND	0.200	--	ND	0.852	--		1
1,1,2,2-Tetrachloroethane	ND	0.200	--	ND	1.37	--		1
o-Xylene	ND	0.200	--	ND	0.869	--		1
1,2,3-Trichloropropane	ND	0.200	--	ND	1.21	--		1
Nonane	ND	0.200	--	ND	1.05	--		1
Isopropylbenzene	ND	0.200	--	ND	0.983	--		1
Bromobenzene	ND	0.200	--	ND	0.793	--		1
2-Chlorotoluene	ND	0.200	--	ND	1.04	--		1

Project Name: BATCH CANISTER CERTIFICATION **Lab Number:** L1529059

Project Number: CANISTER QC BAT **Report Date:** 11/19/15

Air Canister Certification Results

Lab ID: L1529059-01 Date Collected: 11/06/15 18:00

Client ID: CAN 2030 SHELF 1 Date Received: 11/09/15

Sample Location: Field Prep: Not Specified

	ppbV			ug/m3				
Parameter	**Results**	**RL**	**MDL**	**Results**	**RL**	**MDL**	**Qualifier**	**Dilution Factor**
Volatile Organics in Air - Mansfield Lab								
n-Propylbenzene	ND	0.200	--	ND	0.983	--		1
4-Chlorotoluene	ND	0.200	--	ND	1.04	--		1
4-Ethyltoluene	ND	0.200	--	ND	0.983	--		1
1,3,5-Trimethylbenzene	ND	0.200	--	ND	0.983	--		1
tert-Butylbenzene	ND	0.200	--	ND	1.10	--		1
1,2,4-Trimethylbenzene	ND	0.200	--	ND	0.983	--		1
Decane	ND	0.200	--	ND	1.16	--		1
Benzyl chloride	ND	0.200	--	ND	1.04	--		1
1,3-Dichlorobenzene	ND	0.200	--	ND	1.20	--		1
1,4-Dichlorobenzene	ND	0.200	--	ND	1.20	--		1
sec-Butylbenzene	ND	0.200	--	ND	1.10	--		1
p-Isopropyltoluene	ND	0.200	--	ND	1.10	--		1
1,2-Dichlorobenzene	ND	0.200	--	ND	1.20	--		1
n-Butylbenzene	ND	0.200	--	ND	1.10	--		1
1,2-Dibromo-3-chloropropane	ND	0.200	--	ND	1.93	--		1
Undecane	ND	0.200	--	ND	1.28	--		1
Dodecane	ND	0.200	--	ND	1.39	--		1
1,2,4-Trichlorobenzene	ND	0.200	--	ND	1.48	--		1
Naphthalene	ND	0.200	--	ND	1.05	--		1
1,2,3-Trichlorobenzene	ND	0.200	--	ND	1.48	--		1
Hexachlorobutadiene	ND	0.200	--	ND	2.13	--		1

	Results	**Qualifier**	**Units**	**RDL**	**Dilution Factor**
Tentatively Identified Compounds					
No Tentatively Identified Compounds					

Project Name: BATCH CANISTER CERTIFICATION **Lab Number:** L1529059

Project Number: CANISTER QC BAT **Report Date:** 11/19/15

Air Canister Certification Results

Lab ID: L1529059-01 Date Collected: 11/06/15 18:00

Client ID: CAN 2030 SHELF 1 Date Received: 11/09/15

Sample Location: Field Prep: Not Specified

Parameter	ppbV Results	ppbV RL	ppbV MDL	ug/m3 Results	ug/m3 RL	ug/m3 MDL	Qualifier	Dilution Factor
Volatile Organics in Air - Mansfield Lab								

Internal Standard	% Recovery	Qualifier	Acceptance Criteria
1,4-Difluorobenzene	97		60-140
Bromochloromethane	95		60-140
chlorobenzene-d5	96		60-140

Project Name: BATCH CANISTER CERTIFICATION **Lab Number:** L1529059

Project Number: CANISTER QC BAT **Report Date:** 11/19/15

Air Canister Certification Results

Lab ID:	L1529059-01	Date Collected:	11/06/15 18:00
Client ID:	CAN 2030 SHELF 1	Date Received:	11/09/15
Sample Location:		Field Prep:	Not Specified
Matrix:	Air		
Anaytical Method:	48,TO-15-SIM		
Analytical Date:	11/09/15 16:00		
Analyst:	MB		

	ppbV			ug/m3				
Parameter	**Results**	**RL**	**MDL**	**Results**	**RL**	**MDL**	**Qualifier**	**Dilution Factor**
Volatile Organics in Air by SIM - Mansfield Lab								
Dichlorodifluoromethane	ND	0.200	--	ND	0.989	--		1
Chloromethane	ND	0.200	--	ND	0.413	--		1
Freon-114	ND	0.050	--	ND	0.349	--		1
Vinyl chloride	ND	0.020	--	ND	0.051	--		1
1,3-Butadiene	ND	0.020	--	ND	0.044	--		1
Bromomethane	ND	0.020	--	ND	0.078	--		1
Chloroethane	ND	0.020	--	ND	0.053	--		1
Acetone	ND	1.00	--	ND	2.38	--		1
Trichlorofluoromethane	ND	0.050	--	ND	0.281	--		1
Acrylonitrile	ND	0.500	--	ND	1.09	--		1
1,1-Dichloroethene	ND	0.020	--	ND	0.079	--		1
Methylene chloride	ND	0.500	--	ND	1.74	--		1
Freon-113	ND	0.050	--	ND	0.383	--		1
Halothane	ND	0.050	--	ND	0.404	--		1
trans-1,2-Dichloroethene	ND	0.020	--	ND	0.079	--		1
1,1-Dichloroethane	ND	0.020	--	ND	0.081	--		1
Methyl tert butyl ether	ND	0.200	--	ND	0.721	--		1
2-Butanone	ND	0.500	--	ND	1.47	--		1
cis-1,2-Dichloroethene	ND	0.020	--	ND	0.079	--		1
Chloroform	ND	0.020	--	ND	0.098	--		1
1,2-Dichloroethane	ND	0.020	--	ND	0.081	--		1
1,1,1-Trichloroethane	ND	0.020	--	ND	0.109	--		1
Benzene	ND	0.100	--	ND	0.319	--		1
Carbon tetrachloride	ND	0.020	--	ND	0.126	--		1
1,2-Dichloropropane	ND	0.020	--	ND	0.092	--		1

Project Name: BATCH CANISTER CERTIFICATION **Lab Number:** L1529059

Project Number: CANISTER QC BAT **Report Date:** 11/19/15

Air Canister Certification Results

Lab ID: L1529059-01 Date Collected: 11/06/15 18:00

Client ID: CAN 2030 SHELF 1 Date Received: 11/09/15

Sample Location: Field Prep: Not Specified

	ppbV			ug/m3				
Parameter	**Results**	**RL**	**MDL**	**Results**	**RL**	**MDL**	**Qualifier**	**Dilution Factor**
Volatile Organics in Air by SIM - Mansfield Lab								
Bromodichloromethane	ND	0.020	--	ND	0.134	--		1
1,4-Dioxane	ND	0.100	--	ND	0.360	--		1
Trichloroethene	ND	0.020	--	ND	0.107	--		1
cis-1,3-Dichloropropene	ND	0.020	--	ND	0.091	--		1
4-Methyl-2-pentanone	ND	0.500	--	ND	2.05	--		1
trans-1,3-Dichloropropene	ND	0.020	--	ND	0.091	--		1
1,1,2-Trichloroethane	ND	0.020	--	ND	0.109	--		1
Toluene	ND	0.050	--	ND	0.188	--		1
Dibromochloromethane	ND	0.020	--	ND	0.170	--		1
1,2-Dibromoethane	ND	0.020	--	ND	0.154	--		1
Tetrachloroethene	ND	0.020	--	ND	0.136	--		1
1,1,1,2-Tetrachloroethane	ND	0.020	--	ND	0.137	--		1
Chlorobenzene	ND	0.020	--	ND	0.092	--		1
Ethylbenzene	ND	0.020	--	ND	0.087	--		1
p/m-Xylene	ND	0.040	--	ND	0.174	--		1
Bromoform	ND	0.020	--	ND	0.207	--		1
Styrene	ND	0.020	--	ND	0.085	--		1
1,1,2,2-Tetrachloroethane	ND	0.020	--	ND	0.137	--		1
o-Xylene	ND	0.020	--	ND	0.087	--		1
Isopropylbenzene	ND	0.200	--	ND	0.983	--		1
4-Ethyltoluene	ND	0.020	--	ND	0.098	--		1
1,3,5-Trimethybenzene	ND	0.020	--	ND	0.098	--		1
1,2,4-Trimethylbenzene	ND	0.020	--	ND	0.098	--		1
1,3-Dichlorobenzene	ND	0.020	--	ND	0.120	--		1
1,4-Dichlorobenzene	ND	0.020	--	ND	0.120	--		1
sec-Butylbenzene	ND	0.200	--	ND	1.10	--		1
p-Isopropyltoluene	ND	0.200	--	ND	1.10	--		1
1,2-Dichlorobenzene	ND	0.020	--	ND	0.120	--		1

Project Name: BATCH CANISTER CERTIFICATION **Lab Number:** L1529059

Project Number: CANISTER QC BAT **Report Date:** 11/19/15

Air Canister Certification Results

Lab ID: L1529059-01 Date Collected: 11/06/15 18:00

Client ID: CAN 2030 SHELF 1 Date Received: 11/09/15

Sample Location: Field Prep: Not Specified

Parameter	ppbV Results	ppbV RL	ppbV MDL	ug/m3 Results	ug/m3 RL	ug/m3 MDL	Qualifier	Dilution Factor
Volatile Organics in Air by SIM - Mansfield Lab								
n-Butylbenzene	ND	0.200	--	ND	1.10	--		1
1,2,4-Trichlorobenzene	ND	0.050	--	ND	0.371	--		1
Naphthalene	ND	0.050	--	ND	0.262	--		1
1,2,3-Trichlorobenzene	ND	0.050	--	ND	0.371	--		1
Hexachlorobutadiene	ND	0.050	--	ND	0.533	--		1

Internal Standard	% Recovery	Qualifier	Acceptance Criteria
1,4-difluorobenzene	93		60-140
bromochloromethane	93		60-140
chlorobenzene-d5	92		60-140

Project Name: CES, BROOKLYN
Project Number: 1104-15

Lab Number: L1529824
Report Date: 11/19/15

Sample Receipt and Container Information

Were project specific reporting limits specified? YES

Cooler Information	Custody Seal
Cooler	
N/A	Present/Intact

Container Information

Container ID	Container Type	Cooler	pH	Temp deg C	Pres	Seal	Analysis(*)
L1529824-01A	Canister - 2.7 Liter	N/A	N/A	N/A	Y	Absent	TO15-LL(30)
L1529824-02A	Canister - 2.7 Liter	N/A	N/A	N/A	Y	Absent	TO15-LL(30)
L1529824-03A	Canister - 2.7 Liter	N/A	N/A	N/A	Y	Absent	TO15-LL(30)
L1529824-04A	Canister - 2.7 Liter	N/A	N/A	N/A	Y	Absent	TO15-LL(30)

*Values in parentheses indicate holding time in days

Project Name:	CES, BROOKLYN	**Lab Number:**	L1529824
Project Number:	1104-15	**Report Date:**	11/19/15

GLOSSARY

Acronyms

EDL	- Estimated Detection Limit: This value represents the level to which target analyte concentrations are reported as estimated values, when those target analyte concentrations are quantified below the reporting limit (RL). The EDL includes any adjustments from dilutions, concentrations or moisture content, where applicable. The use of EDLs is specific to the analysis of PAHs using Solid-Phase Microextraction (SPME).
EPA	- Environmental Protection Agency.
LCS	- Laboratory Control Sample: A sample matrix, free from the analytes of interest, spiked with verified known amounts of analytes or a material containing known and verified amounts of analytes.
LCSD	- Laboratory Control Sample Duplicate: Refer to LCS.
LFB	- Laboratory Fortified Blank: A sample matrix, free from the analytes of interest, spiked with verified known amounts of analytes or a material containing known and verified amounts of analytes.
MDL	- Method Detection Limit: This value represents the level to which target analyte concentrations are reported as estimated values, when those target analyte concentrations are quantified below the reporting limit (RL). The MDL includes any adjustments from dilutions, concentrations or moisture content, where applicable.
MS	- Matrix Spike Sample: A sample prepared by adding a known mass of target analyte to a specified amount of matrix sample for which an independent estimate of target analyte concentration is available.
MSD	- Matrix Spike Sample Duplicate: Refer to MS.
NA	- Not Applicable.
NC	- Not Calculated: Term is utilized when one or more of the results utilized in the calculation are non-detect at the parameter's reporting unit.
NI	- Not Ignitable.
NP	- Non-Plastic: Term is utilized for the analysis of Atterberg Limits in soil.
RL	- Reporting Limit: The value at which an instrument can accurately measure an analyte at a specific concentration. The RL includes any adjustments from dilutions, concentrations or moisture content, where applicable.
RPD	- Relative Percent Difference: The results from matrix and/or matrix spike duplicates are primarily designed to assess the precision of analytical results in a given matrix and are expressed as relative percent difference (RPD). Values which are less than five times the reporting limit for any individual parameter are evaluated by utilizing the absolute difference between the values; although the RPD value will be provided in the report.
SRM	- Standard Reference Material: A reference sample of a known or certified value that is of the same or similar matrix as the associated field samples.
STLP	- Semi-dynamic Tank Leaching Procedure per EPA Method 1315.
TIC	- Tentatively Identified Compound: A compound that has been identified to be present and is not part of the target compound list (TCL) for the method and/or program. All TICs are qualitatively identified and reported as estimated concentrations.

Footnotes

1	- The reference for this analyte should be considered modified since this analyte is absent from the target analyte list of the original method.

Terms

Total: With respect to Organic analyses, a 'Total' result is defined as the summation of results for individual isomers or Aroclors. If a 'Total' result is requested, the results of its individual components will also be reported. This is applicable to 'Total' results for methods 8260, 8081 and 8082.

Analytical Method: Both the document from which the method originates and the analytical reference method. (Example: EPA 8260B is shown as 1,8260B.) The codes for the reference method documents are provided in the References section of the Addendum.

Data Qualifiers

A	- Spectra identified as "Aldol Condensation Product".
B	- The analyte was detected above the reporting limit in the associated method blank. Flag only applies to associated field samples that have detectable concentrations of the analyte at less than ten times (10x) the concentration found in the blank. For MCP-related projects, flag only applies to associated field samples that have detectable concentrations of the analyte at less than ten times (10x) the concentration found in the blank. For DOD-related projects, flag only applies to associated field samples that have detectable concentrations of the analyte at less than ten times (10x) the concentration found in the blank AND the analyte was detected above one-half the reporting limit (or above the reporting limit for common lab contaminants) in the associated method blank. For NJ-Air-related projects, flag only applies to associated field samples that have detectable concentrations of the analyte above the reporting limit. For NJ-related projects (excluding Air), flag only applies to associated field samples that have detectable concentrations of the analyte, which was detected above the reporting limit in the associated method blank or above five times the reporting limit for common lab contaminants (Phthalates, Acetone, Methylene Chloride, 2-Butanone).

Report Format: Data Usability Report

Project Name: CES, BROOKLYN **Lab Number:** L1529824

Project Number: 1104-15 **Report Date:** 11/19/15

Data Qualifiers

C - Co-elution: The target analyte co-elutes with a known lab standard (i.e. surrogate, internal standards, etc.) for co-extracted analyses.

D - Concentration of analyte was quantified from diluted analysis. Flag only applies to field samples that have detectable concentrations of the analyte.

E - Concentration of analyte exceeds the range of the calibration curve and/or linear range of the instrument.

G - The concentration may be biased high due to matrix interferences (i.e, co-elution) with non-target compound(s). The result should be considered estimated.

H - The analysis of pH was performed beyond the regulatory-required holding time of 15 minutes from the time of sample collection.

I - The lower value for the two columns has been reported due to obvious interference.

M - Reporting Limit (RL) exceeds the MCP CAM Reporting Limit for this analyte.

NJ - Presumptive evidence of compound. This represents an estimated concentration for Tentatively Identified Compounds (TICs), where the identification is based on a mass spectral library search.

P - The RPD between the results for the two columns exceeds the method-specified criteria.

Q - The quality control sample exceeds the associated acceptance criteria. For DOD-related projects, LCS and/or Continuing Calibration Standard exceedences are also qualified on all associated sample results. Note: This flag is not applicable for matrix spike recoveries when the sample concentration is greater than 4x the spike added or for batch duplicate RPD when the sample concentrations are less than 5x the RL. (Metals only.)

R - Analytical results are from sample re-analysis.

RE - Analytical results are from sample re-extraction.

S - Analytical results are from modified screening analysis.

J - Estimated value. This represents an estimated concentration for Tentatively Identified Compounds (TICs).

ND - Not detected at the reporting limit (RL) for the sample.

Report Format: Data Usability Report

REFERENCES

48 Compendium of Methods for the Determination of Toxic Organic Compounds in Ambient Air. Second Edition. EPA/625/R-96/010b, January 1999.

LIMITATION OF LIABILITIES

Alpha Analytical performs services with reasonable care and diligence normal to the analytical testing laboratory industry. In the event of an error, the sole and exclusive responsibility of Alpha Analytical shall be to re-perform the work at it's own expense. In no event shall Alpha Analytical be held liable for any incidental, consequential or special damages, including but not limited to, damages in any way connected with the use of, interpretation of, information or analysis provided by Alpha Analytical.

We strongly urge our clients to comply with EPA protocol regarding sample volume, preservation, cooling, containers, sampling procedures, holding time and splitting of samples in the field.

Certification Information

The following analytes are not included in our Primary NELAP Scope of Accreditation:

Westborough Facility
EPA 8260C: 1,2,4,5-Tetramethylbenzene; 4-Ethyltoluene; Iodomethane (methyl iodide) (soil); Methyl methacrylate (soil); Azobenzene.
EPA 8270D: Dimethylnaphthalene,1,4-Diphenylhydrazine.
EPA 625: 4-Chloroaniline, 4-Methylphenol.
SM4500: Soil: Total Phosphorus, TKN, NO2, NO3.

Mansfield Facility
EPA 8270D: Biphenyl.
EPA 2540D: TSS
EPA TO-15: Halothane, 2,4,4-Trimethyl-2-pentene, 2,4,4-Trimethyl-1-pentene, Thiophene, 2-Methylthiophene, 3-Methylthiophene, 2-Ethylthiophene, 1,2,3-Trimethylbenzene, Indan, Indene, 1,2,4,5-Tetramethylbenzene, Benzothiophene, 1-Methylnaphthalene.

The following analytes are included in our Massachusetts DEP Scope of Accreditation, Westborough Facility:

Drinking Water
EPA 200.8: Sb,As,Ba,Be,Cd,Cr,Cu,Pb,Ni,Se,Tl; **EPA 200.7**: Ba,Be,Ca,Cd,Cr,Cu,Na; **EPA 245.1:** Mercury;
EPA 300.0: Nitrate-N, Fluoride, Sulfate; **EPA 353.2**: Nitrate-N, Nitrite-N; **SM4500NO3-F**: Nitrate-N, Nitrite-N; **SM4500F-C, SM4500CN-CE, EPA 180.1, SM2130B, SM4500Cl-D, SM2320B, SM2540C, SM4500H-B**
EPA 332: Perchlorate.
Microbiology: **SM9215B; SM9223-P/A, SM9223B-Colilert-QT, Enterolert-QT.**

Non-Potable Water
EPA 200.8: Al,Sb,As,Be,Cd,Cr,Cu,Pb,Mn,Ni,Se,Ag,Tl,Zn;
EPA 200.7: Al,Sb,As,Be,Cd,Ca,Cr,Co,Cu,Fe,Pb,Mg,Mn,Mo,Ni,K,Se,Ag,Na,Sr,Ti,Tl,V,Zn;
EPA 245.1, SM4500H,B, EPA 120.1, SM2510B, SM2540C, SM2340B, SM2320B, SM4500CL-E, SM4500F-BC, SM426C, SM4500NH3-BH, **EPA 350.1**: Ammonia-N, **LACHAT 10-107-06-1-B**: Ammonia-N, **SM4500NO3-F,**
EPA 353.2: Nitrate-N**, SM4500NH3-BC-NES, EPA 351.1, SM4500P-E, SM4500P-B, E, SM5220D, EPA 410.4, SM5210B, SM5310C, SM4500CL-D, EPA 1664, SM14 510AC, EPA 420.1, SM4500-CN-CE, SM2540D.**
EPA 624: Volatile Halocarbons & Aromatics,
EPA 608: Chlordane, Toxaphene, Aldrin, alpha-BHC, beta-BHC, gamma-BHC, delta-BHC, Dieldrin, DDD, DDE, DDT, Endosulfan I, Endosulfan II, Endosulfan sulfate, Endrin, Endrin Aldehyde, Heptachlor, Heptachlor Epoxide, PCBs
EPA 625: SVOC (Acid/Base/Neutral Extractables), **EPA 600/4-81-045**: PCB-Oil.
Microbiology: **SM9223B-Colilert-QT; Enterolert-QT, SM9222D-MF**.

For a complete listing of analytes and methods, please contact your Alpha Project Manager.

PHOENIX
Environmental Laboratories, Inc.

Wednesday, November 25, 2015

Attn:
Creative Environmental Solutions
39 West 37th Street, 14th Floor
New York, NY 10018

Project ID: 526 UNION AVE.
Sample ID#s: BK26195 - BK26208

This laboratory is in compliance with the NELAC requirements of procedures used except where indicated.

This report contains results for the parameters tested, under the sampling conditions described on the Chain Of Custody, as received by the laboratory.

All soils, solids and sludges are reported on a dry weight basis unless otherwise noted in the sample comments.

A scanned version of the COC form accompanies the analytical report and is an exact duplicate of the original.

If you have any questions concerning this testing, please do not hesitate to contact Phoenix Client Services at ext. 200.

Sincerely yours,

Phyllis Shiller
Laboratory Director

NELAC - #NY11301
CT Lab Registration #PH-0618
MA Lab Registration #MA-CT-007
ME Lab Registration #CT-007
NH Lab Registration #213693-A,B
NJ Lab Registration #CT-003
NY Lab Registration #11301
PA Lab Registration #68-03530
RI Lab Registration #63
VT Lab Registration #VT11301

587 East Middle Turnpike, P.O. Box 370, Manchester, CT 06040
Telephone (860) 645-1102 Fax (860) 645-0823

Environmental Laboratories, Inc.
587 East Middle Turnpike, P.O.Box 370, Manchester, CT 06045
Tel. (860) 645-1102 Fax (860) 645-0823

NY # 11301

SDG Comments

November 25, 2015

SDG I.D.: GBK26195

Please be advised that the NY 375 soil criteria for chromium are based on hexavalent chromium and trivalent chromium.

PHOENIX

Environmental Laboratories, Inc.
587 East Middle Turnpike, P.O.Box 370, Manchester, CT 06045
Tel. (860) 645-1102 Fax (860) 645-0823

ACCREDITED IN ACCORDANCE WITH nelac NY # 11301

Analysis Report

November 25, 2015

FOR: Attn:
Creative Environmental Solutions
39 West 37th Street, 14th Floor
New York, NY 10018

Sample Information		Custody Information		Date	Time
Matrix:	SOIL	Collected by:		11/18/15	10:00
Location Code:	CREATENV	Received by:	LB	11/19/15	17:04
Rush Request:	72 Hour	Analyzed by:	see "By" below		
P.O.#:					

Laboratory Data

SDG ID: GBK26195
Phoenix ID: BK26195

Project ID: 526 UNION AVE.
Client ID: SB1 0-2

Parameter	Result	RL/ PQL	Units	Dilution	Date/Time	By	Reference	
Silver	3.98	0.41	mg/Kg	1	11/20/15 11:30	LK	SW6010C	
Aluminum	5000	62	mg/Kg	10	11/20/15 08:22	LK	SW6010C	
Arsenic	40.3	0.8	mg/Kg	1	11/20/15 11:30	LK	SW6010C	
Barium	1940	4.1	mg/Kg	10	11/20/15 08:22	LK	SW6010C	
Beryllium	0.34	0.33	mg/Kg	1	11/20/15 11:30	LK	SW6010C	
Calcium	18900	62	mg/Kg	10	11/20/15 08:22	LK	SW6010C	
Cadmium	28.0	0.41	mg/Kg	1	11/20/15 11:30	LK	SW6010C	
Cobalt	23.4	0.41	mg/Kg	1	11/20/15 11:30	LK	SW6010C	
Chromium	224	4.1	mg/Kg	10	11/20/15 08:22	LK	SW6010C	
Copper	1160	4.1	mg/kg	10	11/20/15 08:22	LK	SW6010C	
Iron	152000	620	mg/Kg	100	11/21/15 01:17	LK	SW6010C	B
Mercury	5.66	0.32	mg/Kg	1	11/23/15 09:45	RS	SW7471B	
Potassium	544	6.2	mg/Kg	1	11/20/15 11:30	LK	SW6010C	
Magnesium	5490	6.2	mg/Kg	1	11/20/15 11:30	LK	SW6010C	
Manganese	969	4.1	mg/Kg	10	11/20/15 08:22	LK	SW6010C	
Sodium	827	6.2	mg/Kg	1	11/20/15 11:30	LK	SW6010C	B
Nickel	253	4.1	mg/Kg	10	11/20/15 08:22	LK	SW6010C	
Lead	4880	41	mg/Kg	100	11/21/15 01:17	LK	SW6010C	
Antimony	43.0	4.1	mg/Kg	1	11/20/15 11:30	LK	SW6010C	
Selenium	< 1.6	1.6	mg/Kg	1	11/20/15 11:30	LK	SW6010C	
Thallium	< 3.7	3.7	mg/Kg	1	11/20/15 11:30	LK	SW6010C	
Vanadium	60.7	0.41	mg/Kg	1	11/20/15 11:30	LK	SW6010C	
Zinc	5710	41	mg/Kg	100	11/21/15 01:17	LK	SW6010C	
Percent Solid	79		%		11/20/15 01:40	W	SW846-%Solid	
Soil Extraction for PCB	Completed				11/19/15 00:00	BC	SW3545A	
Soil Extraction for Pesticide	Completed				11/19/15 00:00	BC/V	SW3545A	
Soil Extraction for SVOA	Completed				11/19/15 00:00	BB/CKV	SW3545A	
Mercury Digestion	Completed				11/21/15 00:00	W/W	SW7471B	

Project ID: 526 UNION AVE.
Client ID: SB1 0-2

Phoenix I.D.: BK26195

Parameter	Result	RL/ PQL	Units	Dilution	Date/Time	By	Reference
Total Metals Digest	Completed				11/19/15 00:00	G/AG	SW3050B
Field Extraction	Completed				11/18/15 10:00		SW5035A
Polychlorinated Biphenyls							
PCB-1016	ND	0.82	mg/Kg	20	11/21/15 04:11	AW	SW8082A
PCB-1221	ND	0.82	mg/Kg	20	11/21/15 04:11	AW	SW8082A
PCB-1232	ND	0.82	mg/Kg	20	11/21/15 04:11	AW	SW8082A
PCB-1242	ND	0.82	mg/Kg	20	11/21/15 04:11	AW	SW8082A
PCB-1248	*	0.82	mg/Kg	20	11/21/15 04:11	AW	SW8082A
PCB-1254	*	0.82	mg/Kg	20	11/21/15 04:11	AW	SW8082A
PCB-1260	*	0.82	mg/Kg	20	11/21/15 04:11	AW	SW8082A
PCB-1262	ND	0.82	mg/Kg	20	11/21/15 04:11	AW	SW8082A
PCB-1268	ND	0.82	mg/Kg	20	11/21/15 04:11	AW	SW8082A
Total PCBs	16	0.82	mg/Kg	20	11/21/15 04:11	AW	SW8082A
QA/QC Surrogates							
% DCBP	118		%	20	11/21/15 04:11	AW	30 - 150 %
% TCMX	102		%	20	11/21/15 04:11	AW	30 - 150 %
Pesticides - Soil							
4,4' -DDD	ND	0.4	mg/Kg	10	11/20/15 18:52	CE	SW8081B
4,4' -DDE	ND	0.02	mg/Kg	10	11/20/15 18:52	CE	SW8081B
4,4' -DDT	ND	0.5	mg/Kg	10	11/20/15 18:52	CE	SW8081B
a-BHC	ND	0.041	mg/Kg	10	11/20/15 18:52	CE	SW8081B
a-Chlordane	ND	0.03	mg/Kg	10	11/20/15 18:52	CE	SW8081B
Aldrin	ND	0.02	mg/Kg	10	11/20/15 18:52	CE	SW8081B
b-BHC	ND	0.041	mg/Kg	10	11/20/15 18:52	CE	SW8081B
Chlordane	ND	0.2	mg/Kg	10	11/20/15 18:52	CE	SW8081B
d-BHC	ND	0.041	mg/Kg	10	11/20/15 18:52	CE	SW8081B
Dieldrin	ND	0.2	mg/Kg	10	11/20/15 18:52	CE	SW8081B
Endosulfan I	ND	0.041	mg/Kg	10	11/20/15 18:52	CE	SW8081B
Endosulfan II	ND	0.041	mg/Kg	10	11/20/15 18:52	CE	SW8081B
Endosulfan sulfate	ND	0.041	mg/Kg	10	11/20/15 18:52	CE	SW8081B
Endrin	ND	0.041	mg/Kg	10	11/20/15 18:52	CE	SW8081B
Endrin aldehyde	ND	0.15	mg/Kg	10	11/20/15 18:52	CE	SW8081B
Endrin ketone	ND	0.041	mg/Kg	10	11/20/15 18:52	CE	SW8081B
g-BHC	ND	0.03	mg/Kg	10	11/20/15 18:52	CE	SW8081B
g-Chlordane	ND	0.02	mg/Kg	10	11/20/15 18:52	CE	SW8081B
Heptachlor	ND	0.041	mg/Kg	10	11/20/15 18:52	CE	SW8081B
Heptachlor epoxide	ND	0.041	mg/Kg	10	11/20/15 18:52	CE	SW8081B
Methoxychlor	ND	0.2	mg/Kg	10	11/20/15 18:52	CE	SW8081B
Toxaphene	ND	0.82	mg/Kg	10	11/20/15 18:52	CE	SW8081B
QA/QC Surrogates							
% DCBP	101		%	10	11/20/15 18:52	CE	30 - 150 %
% TCMX	81		%	10	11/20/15 18:52	CE	30 - 150 %
Volatiles							
1,1,1,2-Tetrachloroethane	ND	0.0093	mg/Kg	1	11/21/15 02:40	JLI	SW8260C
1,1,1-Trichloroethane	ND	0.0093	mg/Kg	1	11/21/15 02:40	JLI	SW8260C
1,1,2,2-Tetrachloroethane	ND	0.0093	mg/Kg	1	11/21/15 02:40	JLI	SW8260C
1,1,2-Trichloroethane	ND	0.0093	mg/Kg	1	11/21/15 02:40	JLI	SW8260C

Project ID: 526 UNION AVE.
Client ID: SB1 0-2

Phoenix I.D.: BK26195

Parameter	Result	RL/ PQL	Units	Dilution	Date/Time	By	Reference	
1,1-Dichloroethane	ND	0.0093	mg/Kg	1	11/21/15 02:40	JLI	SW8260C	
1,1-Dichloroethene	ND	0.0093	mg/Kg	1	11/21/15 02:40	JLI	SW8260C	
1,1-Dichloropropene	ND	0.0093	mg/Kg	1	11/21/15 02:40	JLI	SW8260C	
1,2,3-Trichlorobenzene	ND	0.0093	mg/Kg	1	11/21/15 02:40	JLI	SW8260C	
1,2,3-Trichloropropane	ND	0.0093	mg/Kg	1	11/21/15 02:40	JLI	SW8260C	
1,2,4-Trichlorobenzene	ND	0.0093	mg/Kg	1	11/21/15 02:40	JLI	SW8260C	
1,2,4-Trimethylbenzene	ND	0.0093	mg/Kg	1	11/21/15 02:40	JLI	SW8260C	
1,2-Dibromo-3-chloropropane	ND	0.0093	mg/Kg	1	11/21/15 02:40	JLI	SW8260C	
1,2-Dibromoethane	ND	0.0093	mg/Kg	1	11/21/15 02:40	JLI	SW8260C	
1,2-Dichlorobenzene	ND	0.0093	mg/Kg	1	11/21/15 02:40	JLI	SW8260C	
1,2-Dichloroethane	ND	0.0093	mg/Kg	1	11/21/15 02:40	JLI	SW8260C	
1,2-Dichloropropane	ND	0.0093	mg/Kg	1	11/21/15 02:40	JLI	SW8260C	
1,3,5-Trimethylbenzene	ND	0.0093	mg/Kg	1	11/21/15 02:40	JLI	SW8260C	
1,3-Dichlorobenzene	ND	0.0093	mg/Kg	1	11/21/15 02:40	JLI	SW8260C	
1,3-Dichloropropane	ND	0.0093	mg/Kg	1	11/21/15 02:40	JLI	SW8260C	
1,4-Dichlorobenzene	ND	0.0093	mg/Kg	1	11/21/15 02:40	JLI	SW8260C	
2,2-Dichloropropane	ND	0.0093	mg/Kg	1	11/21/15 02:40	JLI	SW8260C	
2-Chlorotoluene	ND	0.0093	mg/Kg	1	11/21/15 02:40	JLI	SW8260C	
2-Hexanone	ND	0.047	mg/Kg	1	11/21/15 02:40	JLI	SW8260C	
2-Isopropyltoluene	ND	0.0093	mg/Kg	1	11/21/15 02:40	JLI	SW8260C	1
4-Chlorotoluene	ND	0.0093	mg/Kg	1	11/21/15 02:40	JLI	SW8260C	
4-Methyl-2-pentanone	ND	0.047	mg/Kg	1	11/21/15 02:40	JLI	SW8260C	
Acetone	ND	0.047	mg/Kg	1	11/21/15 02:40	JLI	SW8260C	
Acrylonitrile	ND	0.019	mg/Kg	1	11/21/15 02:40	JLI	SW8260C	
Benzene	ND	0.0093	mg/Kg	1	11/21/15 02:40	JLI	SW8260C	
Bromobenzene	ND	0.0093	mg/Kg	1	11/21/15 02:40	JLI	SW8260C	
Bromochloromethane	ND	0.0093	mg/Kg	1	11/21/15 02:40	JLI	SW8260C	
Bromodichloromethane	ND	0.0093	mg/Kg	1	11/21/15 02:40	JLI	SW8260C	
Bromoform	ND	0.0093	mg/Kg	1	11/21/15 02:40	JLI	SW8260C	
Bromomethane	ND	0.0093	mg/Kg	1	11/21/15 02:40	JLI	SW8260C	
Carbon Disulfide	ND	0.0093	mg/Kg	1	11/21/15 02:40	JLI	SW8260C	
Carbon tetrachloride	ND	0.0093	mg/Kg	1	11/21/15 02:40	JLI	SW8260C	
Chlorobenzene	ND	0.0093	mg/Kg	1	11/21/15 02:40	JLI	SW8260C	
Chloroethane	ND	0.0093	mg/Kg	1	11/21/15 02:40	JLI	SW8260C	
Chloroform	ND	0.0093	mg/Kg	1	11/21/15 02:40	JLI	SW8260C	
Chloromethane	ND	0.0093	mg/Kg	1	11/21/15 02:40	JLI	SW8260C	
cis-1,2-Dichloroethene	ND	0.0093	mg/Kg	1	11/21/15 02:40	JLI	SW8260C	
cis-1,3-Dichloropropene	ND	0.0093	mg/Kg	1	11/21/15 02:40	JLI	SW8260C	
Dibromochloromethane	ND	0.0093	mg/Kg	1	11/21/15 02:40	JLI	SW8260C	
Dibromomethane	ND	0.0093	mg/Kg	1	11/21/15 02:40	JLI	SW8260C	
Dichlorodifluoromethane	ND	0.0093	mg/Kg	1	11/21/15 02:40	JLI	SW8260C	
Ethylbenzene	ND	0.0093	mg/Kg	1	11/21/15 02:40	JLI	SW8260C	
Hexachlorobutadiene	ND	0.0093	mg/Kg	1	11/21/15 02:40	JLI	SW8260C	
Isopropylbenzene	ND	0.0093	mg/Kg	1	11/21/15 02:40	JLI	SW8260C	
m&p-Xylene	ND	0.0093	mg/Kg	1	11/21/15 02:40	JLI	SW8260C	
Methyl Ethyl Ketone	ND	0.047	mg/Kg	1	11/21/15 02:40	JLI	SW8260C	
Methyl t-butyl ether (MTBE)	ND	0.019	mg/Kg	1	11/21/15 02:40	JLI	SW8260C	
Methylene chloride	ND	0.019	mg/Kg	1	11/21/15 02:40	JLI	SW8260C	
Naphthalene	ND	0.0093	mg/Kg	1	11/21/15 02:40	JLI	SW8260C	

Parameter	Result	RL/ PQL	Units	Dilution	Date/Time	By	Reference	
n-Butylbenzene	ND	0.0093	mg/Kg	1	11/21/15 02:40	JLI	SW8260C	
n-Propylbenzene	ND	0.0093	mg/Kg	1	11/21/15 02:40	JLI	SW8260C	
o-Xylene	ND	0.0093	mg/Kg	1	11/21/15 02:40	JLI	SW8260C	
p-Isopropyltoluene	ND	0.0093	mg/Kg	1	11/21/15 02:40	JLI	SW8260C	
sec-Butylbenzene	ND	0.0093	mg/Kg	1	11/21/15 02:40	JLI	SW8260C	
Styrene	ND	0.0093	mg/Kg	1	11/21/15 02:40	JLI	SW8260C	
tert-Butylbenzene	ND	0.0093	mg/Kg	1	11/21/15 02:40	JLI	SW8260C	
Tetrachloroethene	ND	0.0093	mg/Kg	1	11/21/15 02:40	JLI	SW8260C	
Tetrahydrofuran (THF)	ND	0.019	mg/Kg	1	11/21/15 02:40	JLI	SW8260C	1
Toluene	ND	0.0093	mg/Kg	1	11/21/15 02:40	JLI	SW8260C	
Total Xylenes	ND	0.0093	mg/Kg	1	11/21/15 02:40	JLI	SW8260C	
trans-1,2-Dichloroethene	ND	0.0093	mg/Kg	1	11/21/15 02:40	JLI	SW8260C	
trans-1,3-Dichloropropene	ND	0.0093	mg/Kg	1	11/21/15 02:40	JLI	SW8260C	
trans-1,4-dichloro-2-butene	ND	0.019	mg/Kg	1	11/21/15 02:40	JLI	SW8260C	
Trichloroethene	ND	0.0093	mg/Kg	1	11/21/15 02:40	JLI	SW8260C	
Trichlorofluoromethane	ND	0.0093	mg/Kg	1	11/21/15 02:40	JLI	SW8260C	
Trichlorotrifluoroethane	ND	0.0093	mg/Kg	1	11/21/15 02:40	JLI	SW8260C	
Vinyl chloride	ND	0.0093	mg/Kg	1	11/21/15 02:40	JLI	SW8260C	
QA/QC Surrogates								
% 1,2-dichlorobenzene-d4	102		%	1	11/21/15 02:40	JLI	70 - 130 %	
% Bromofluorobenzene	88		%	1	11/21/15 02:40	JLI	70 - 130 %	
% Dibromofluoromethane	97		%	1	11/21/15 02:40	JLI	70 - 130 %	
% Toluene-d8	96		%	1	11/21/15 02:40	JLI	70 - 130 %	

Semivolatiles

1,2,4,5-Tetrachlorobenzene	ND	0.29	mg/Kg	1	11/20/15 05:30	DD	SW8270D
1,2,4-Trichlorobenzene	ND	0.29	mg/Kg	1	11/20/15 05:30	DD	SW8270D
1,2-Dichlorobenzene	ND	0.29	mg/Kg	1	11/20/15 05:30	DD	SW8270D
1,2-Diphenylhydrazine	ND	0.41	mg/Kg	1	11/20/15 05:30	DD	SW8270D
1,3-Dichlorobenzene	ND	0.29	mg/Kg	1	11/20/15 05:30	DD	SW8270D
1,4-Dichlorobenzene	ND	0.29	mg/Kg	1	11/20/15 05:30	DD	SW8270D
2,4,5-Trichlorophenol	ND	0.29	mg/Kg	1	11/20/15 05:30	DD	SW8270D
2,4,6-Trichlorophenol	ND	0.29	mg/Kg	1	11/20/15 05:30	DD	SW8270D
2,4-Dichlorophenol	ND	0.29	mg/Kg	1	11/20/15 05:30	DD	SW8270D
2,4-Dimethylphenol	ND	0.29	mg/Kg	1	11/20/15 05:30	DD	SW8270D
2,4-Dinitrophenol	ND	0.66	mg/Kg	1	11/20/15 05:30	DD	SW8270D
2,4-Dinitrotoluene	ND	0.29	mg/Kg	1	11/20/15 05:30	DD	SW8270D
2,6-Dinitrotoluene	ND	0.29	mg/Kg	1	11/20/15 05:30	DD	SW8270D
2-Chloronaphthalene	ND	0.29	mg/Kg	1	11/20/15 05:30	DD	SW8270D
2-Chlorophenol	ND	0.29	mg/Kg	1	11/20/15 05:30	DD	SW8270D
2-Methylnaphthalene	ND	0.29	mg/Kg	1	11/20/15 05:30	DD	SW8270D
2-Methylphenol (o-cresol)	ND	0.29	mg/Kg	1	11/20/15 05:30	DD	SW8270D
2-Nitroaniline	ND	0.66	mg/Kg	1	11/20/15 05:30	DD	SW8270D
2-Nitrophenol	ND	0.29	mg/Kg	1	11/20/15 05:30	DD	SW8270D
3&4-Methylphenol (m&p-cresol)	ND	0.41	mg/Kg	1	11/20/15 05:30	DD	SW8270D
3,3'-Dichlorobenzidine	ND	0.29	mg/Kg	1	11/20/15 05:30	DD	SW8270D
3-Nitroaniline	ND	0.66	mg/Kg	1	11/20/15 05:30	DD	SW8270D
4,6-Dinitro-2-methylphenol	ND	1.2	mg/Kg	1	11/20/15 05:30	DD	SW8270D
4-Bromophenyl phenyl ether	ND	0.41	mg/Kg	1	11/20/15 05:30	DD	SW8270D
4-Chloro-3-methylphenol	ND	0.29	mg/Kg	1	11/20/15 05:30	DD	SW8270D

Project ID: 526 UNION AVE.
Client ID: SB1 0-2

Phoenix I.D.: BK26195

Parameter	Result	RL/ PQL	Units	Dilution	Date/Time	By	Reference	
4-Chloroaniline	ND	0.29	mg/Kg	1	11/20/15 05:30	DD	SW8270D	
4-Chlorophenyl phenyl ether	ND	0.29	mg/Kg	1	11/20/15 05:30	DD	SW8270D	
4-Nitroaniline	ND	0.66	mg/Kg	1	11/20/15 05:30	DD	SW8270D	
4-Nitrophenol	ND	1.2	mg/Kg	1	11/20/15 05:30	DD	SW8270D	
Acenaphthene	ND	0.29	mg/Kg	1	11/20/15 05:30	DD	SW8270D	
Acenaphthylene	ND	0.29	mg/Kg	1	11/20/15 05:30	DD	SW8270D	
Acetophenone	ND	0.29	mg/Kg	1	11/20/15 05:30	DD	SW8270D	
Aniline	ND	1.2	mg/Kg	1	11/20/15 05:30	DD	SW8270D	
Anthracene	ND	0.29	mg/Kg	1	11/20/15 05:30	DD	SW8270D	
Benz(a)anthracene	0.87	0.29	mg/Kg	1	11/20/15 05:30	DD	SW8270D	
Benzidine	ND	0.5	mg/Kg	1	11/20/15 05:30	DD	SW8270D	
Benzo(a)pyrene	1	0.29	mg/Kg	1	11/20/15 05:30	DD	SW8270D	
Benzo(b)fluoranthene	1.2	0.29	mg/Kg	1	11/20/15 05:30	DD	SW8270D	
Benzo(ghi)perylene	1.4	0.29	mg/Kg	1	11/20/15 05:30	DD	SW8270D	
Benzo(k)fluoranthene	0.78	0.29	mg/Kg	1	11/20/15 05:30	DD	SW8270D	
Benzoic acid	ND	1.2	mg/Kg	1	11/20/15 05:30	DD	SW8270D	1
Benzyl butyl phthalate	ND	0.29	mg/Kg	1	11/20/15 05:30	DD	SW8270D	
Bis(2-chloroethoxy)methane	ND	0.29	mg/Kg	1	11/20/15 05:30	DD	SW8270D	
Bis(2-chloroethyl)ether	ND	0.41	mg/Kg	1	11/20/15 05:30	DD	SW8270D	
Bis(2-chloroisopropyl)ether	ND	0.29	mg/Kg	1	11/20/15 05:30	DD	SW8270D	
Bis(2-ethylhexyl)phthalate	ND	0.29	mg/Kg	1	11/20/15 05:30	DD	SW8270D	
Carbazole	ND	0.62	mg/Kg	1	11/20/15 05:30	DD	SW8270D	
Chrysene	1.1	0.29	mg/Kg	1	11/20/15 05:30	DD	SW8270D	
Dibenz(a,h)anthracene	ND	0.29	mg/Kg	1	11/20/15 05:30	DD	SW8270D	
Dibenzofuran	ND	0.29	mg/Kg	1	11/20/15 05:30	DD	SW8270D	
Diethyl phthalate	ND	0.29	mg/Kg	1	11/20/15 05:30	DD	SW8270D	
Dimethylphthalate	ND	0.29	mg/Kg	1	11/20/15 05:30	DD	SW8270D	
Di-n-butylphthalate	ND	0.29	mg/Kg	1	11/20/15 05:30	DD	SW8270D	
Di-n-octylphthalate	ND	0.29	mg/Kg	1	11/20/15 05:30	DD	SW8270D	
Fluoranthene	1.3	0.29	mg/Kg	1	11/20/15 05:30	DD	SW8270D	
Fluorene	ND	0.29	mg/Kg	1	11/20/15 05:30	DD	SW8270D	
Hexachlorobenzene	ND	0.29	mg/Kg	1	11/20/15 05:30	DD	SW8270D	
Hexachlorobutadiene	ND	0.29	mg/Kg	1	11/20/15 05:30	DD	SW8270D	
Hexachlorocyclopentadiene	ND	0.29	mg/Kg	1	11/20/15 05:30	DD	SW8270D	
Hexachloroethane	ND	0.29	mg/Kg	1	11/20/15 05:30	DD	SW8270D	
Indeno(1,2,3-cd)pyrene	1.1	0.29	mg/Kg	1	11/20/15 05:30	DD	SW8270D	
Isophorone	ND	0.29	mg/Kg	1	11/20/15 05:30	DD	SW8270D	
Naphthalene	ND	0.29	mg/Kg	1	11/20/15 05:30	DD	SW8270D	
Nitrobenzene	ND	0.29	mg/Kg	1	11/20/15 05:30	DD	SW8270D	
N-Nitrosodimethylamine	ND	0.41	mg/Kg	1	11/20/15 05:30	DD	SW8270D	
N-Nitrosodi-n-propylamine	ND	0.29	mg/Kg	1	11/20/15 05:30	DD	SW8270D	
N-Nitrosodiphenylamine	ND	0.41	mg/Kg	1	11/20/15 05:30	DD	SW8270D	
Pentachloronitrobenzene	ND	0.41	mg/Kg	1	11/20/15 05:30	DD	SW8270D	
Pentachlorophenol	ND	0.41	mg/Kg	1	11/20/15 05:30	DD	SW8270D	
Phenanthrene	0.74	0.29	mg/Kg	1	11/20/15 05:30	DD	SW8270D	
Phenol	ND	0.29	mg/Kg	1	11/20/15 05:30	DD	SW8270D	
Pyrene	1.5	0.29	mg/Kg	1	11/20/15 05:30	DD	SW8270D	
Pyridine	ND	0.41	mg/Kg	1	11/20/15 05:30	DD	SW8270D	

QA/QC Surrogates

Project ID: 526 UNION AVE.
Client ID: SB1 0-2

Phoenix I.D.: BK26195

Parameter	Result	RL/ PQL	Units	Dilution	Date/Time	By	Reference	
% 2,4,6-Tribromophenol	47		%	1	11/20/15 05:30	DD	30 - 130 %	
% 2-Fluorobiphenyl	40		%	1	11/20/15 05:30	DD	30 - 130 %	
% 2-Fluorophenol	29		%	1	11/20/15 05:30	DD	30 - 130 %	3
% Nitrobenzene-d5	36		%	1	11/20/15 05:30	DD	30 - 130 %	
% Phenol-d5	33		%	1	11/20/15 05:30	DD	30 - 130 %	
% Terphenyl-d14	30		%	1	11/20/15 05:30	DD	30 - 130 %	

1 = This parameter is not certified by NY NELAC for this matrix. NY NELAC does not offer certification for all parameters at this time.
3 = This parameter exceeds laboratory specified limits.
B = Present in blank, no bias suspected.

RL/PQL=Reporting/Practical Quantitation Level (Equivalent to NELAC LOQ, Limit of Quanitation) ND=Not Detected BRL=Below Reporting Level
QA/QC Surrogates: Surrogates are compounds (preceeded with a %) added by the lab to determine analysis efficiency. Surrogate results(%) listed in the report are not "detected" compounds.

Comments:

Per 1.4.6 of EPA method 8270D, 1,2-Diphenylhydrazine is unstable and readily converts to Azobenzene. Azobenzene is used for the calibration of 1,2-Diphenylhydrazine.

Please be advised that the NY 375 soil criteria for chromium are based on hexavalent chromium and trivalent chromium.

Semi-Volatile Comment:
Poor surrogate recovery was observed for one acid and/or one base surrogate. The other surrogates associated with this sample were within QA/QC criteria. No significant bias suspected.

PCB Comment:
* For PCBs, as per section 11.9.3 of SW846 method 8082, when multiple Aroclor's of PCBs are present and the aroclor is no longer recognizable, quantitation may be performed by comparing the total area of the PCB pattern to that of the aroclor it mostly resembles. The PCB pattern did not resemble any of the standards, but most closely resembles a mixture of the Aroclors 1248 and 1254 and 1260.

Pesticide Comment:
Due to matrix interference caused by the presence of PCBs in the sample, an elevated RL was reported.

All soils, solids and sludges are reported on a dry weight basis unless otherwise noted in the sample comments.

If there are any questions regarding this data, please call Phoenix Client Services at extension 200.
This report must not be reproduced except in full as defined by the attached chain of custody.

Phyllis Shiller, Laboratory Director
November 25, 2015
Reviewed and Released by: Bobbi Aloisa, Vice President

PHOENIX

Environmental Laboratories, Inc.
587 East Middle Turnpike, P.O.Box 370, Manchester, CT 06045
Tel. (860) 645-1102 Fax (860) 645-0823

ACCREDITED IN ACCORDANCE WITH nelac NY # 11301

Analysis Report

November 25, 2015

FOR: Attn:
Creative Environmental Solutions
39 West 37th Street, 14th Floor
New York, NY 10018

Sample Information		Custody Information		Date	Time
Matrix:	SOIL	Collected by:		11/18/15	10:20
Location Code:	CREATENV	Received by:	LB	11/19/15	17:04
Rush Request:	72 Hour	Analyzed by:	see "By" below		
P.O.#:					

Laboratory Data

SDG ID: GBK26195
Phoenix ID: BK26196

Project ID: 526 UNION AVE.
Client ID: SB1 5-7

Parameter	Result	RL/ PQL	Units	Dilution	Date/Time	By	Reference	
Silver	< 0.36	0.36	mg/Kg	1	11/20/15 11:34	LK	SW6010C	
Aluminum	7140	54	mg/Kg	10	11/20/15 08:26	LK	SW6010C	
Arsenic	7.9	0.7	mg/Kg	1	11/20/15 11:34	LK	SW6010C	
Barium	414	0.36	mg/Kg	1	11/20/15 11:34	LK	SW6010C	
Beryllium	0.40	0.29	mg/Kg	1	11/20/15 11:34	LK	SW6010C	
Calcium	6410	5.4	mg/Kg	1	11/20/15 11:34	LK	SW6010C	
Cadmium	3.18	0.36	mg/Kg	1	11/20/15 11:34	LK	SW6010C	
Cobalt	4.76	0.36	mg/Kg	1	11/20/15 11:34	LK	SW6010C	
Chromium	85.2	0.36	mg/Kg	1	11/20/15 11:34	LK	SW6010C	
Copper	31.5	0.36	mg/kg	1	11/20/15 11:34	LK	SW6010C	
Iron	13400	54	mg/Kg	10	11/20/15 08:26	LK	SW6010C	B
Mercury	0.46	0.03	mg/Kg	1	11/23/15 09:48	RS	SW7471B	
Potassium	842	5.4	mg/Kg	1	11/20/15 11:34	LK	SW6010C	
Magnesium	2150	5.4	mg/Kg	1	11/20/15 11:34	LK	SW6010C	
Manganese	186	3.6	mg/Kg	10	11/20/15 08:26	LK	SW6010C	
Sodium	164	5.4	mg/Kg	1	11/20/15 11:34	LK	SW6010C	B
Nickel	16.6	0.36	mg/Kg	1	11/20/15 11:34	LK	SW6010C	
Lead	1330	3.6	mg/Kg	10	11/20/15 08:26	LK	SW6010C	
Antimony	< 3.6	3.6	mg/Kg	1	11/20/15 11:34	LK	SW6010C	
Selenium	< 1.4	1.4	mg/Kg	1	11/20/15 11:34	LK	SW6010C	
Thallium	< 3.2	3.2	mg/Kg	1	11/20/15 11:34	LK	SW6010C	
Vanadium	22.0	0.36	mg/Kg	1	11/20/15 11:34	LK	SW6010C	
Zinc	787	3.6	mg/Kg	10	11/20/15 08:26	LK	SW6010C	
Percent Solid	82		%		11/20/15 01:40	W	SW846-%Solid	
Soil Extraction for PCB	Completed				11/19/15 00:00	BC	SW3545A	
Soil Extraction for Pesticide	Completed				11/19/15 00:00	BC/V	SW3545A	
Soil Extraction for SVOA	Completed				11/19/15 00:00	BB/CKV	SW3545A	
Mercury Digestion	Completed				11/21/15 00:00	W/W	SW7471B	

Project ID: 526 UNION AVE.
Client ID: SB1 5-7

Phoenix I.D.: BK26196

Parameter	Result	RL/ PQL	Units	Dilution	Date/Time	By	Reference
Total Metals Digest	Completed				11/19/15 00:00	G/AG	SW3050B
Field Extraction	Completed				11/18/15 10:20		SW5035A
Polychlorinated Biphenyls							
PCB-1016	ND	0.08	mg/Kg	2	11/20/15 18:51	AW	SW8082A
PCB-1221	ND	0.08	mg/Kg	2	11/20/15 18:51	AW	SW8082A
PCB-1232	ND	0.08	mg/Kg	2	11/20/15 18:51	AW	SW8082A
PCB-1242	ND	0.08	mg/Kg	2	11/20/15 18:51	AW	SW8082A
PCB-1248	ND	0.08	mg/Kg	2	11/20/15 18:51	AW	SW8082A
PCB-1254	ND	0.08	mg/Kg	2	11/20/15 18:51	AW	SW8082A
PCB-1260	ND	0.08	mg/Kg	2	11/20/15 18:51	AW	SW8082A
PCB-1262	ND	0.08	mg/Kg	2	11/20/15 18:51	AW	SW8082A
PCB-1268	ND	0.08	mg/Kg	2	11/20/15 18:51	AW	SW8082A
QA/QC Surrogates							
% DCBP	85		%	2	11/20/15 18:51	AW	30 - 150 %
% TCMX	81		%	2	11/20/15 18:51	AW	30 - 150 %
Pesticides - Soil							
4,4' -DDD	ND	0.0024	mg/Kg	2	11/20/15 19:11	CE	SW8081B
4,4' -DDE	ND	0.0024	mg/Kg	2	11/20/15 19:11	CE	SW8081B
4,4' -DDT	ND	0.0024	mg/Kg	2	11/20/15 19:11	CE	SW8081B
a-BHC	ND	0.008	mg/Kg	2	11/20/15 19:11	CE	SW8081B
a-Chlordane	ND	0.004	mg/Kg	2	11/20/15 19:11	CE	SW8081B
Aldrin	ND	0.004	mg/Kg	2	11/20/15 19:11	CE	SW8081B
b-BHC	ND	0.008	mg/Kg	2	11/20/15 19:11	CE	SW8081B
Chlordane	ND	0.04	mg/Kg	2	11/20/15 19:11	CE	SW8081B
d-BHC	ND	0.008	mg/Kg	2	11/20/15 19:11	CE	SW8081B
Dieldrin	ND	0.004	mg/Kg	2	11/20/15 19:11	CE	SW8081B
Endosulfan I	ND	0.008	mg/Kg	2	11/20/15 19:11	CE	SW8081B
Endosulfan II	ND	0.008	mg/Kg	2	11/20/15 19:11	CE	SW8081B
Endosulfan sulfate	ND	0.008	mg/Kg	2	11/20/15 19:11	CE	SW8081B
Endrin	ND	0.008	mg/Kg	2	11/20/15 19:11	CE	SW8081B
Endrin aldehyde	ND	0.008	mg/Kg	2	11/20/15 19:11	CE	SW8081B
Endrin ketone	ND	0.008	mg/Kg	2	11/20/15 19:11	CE	SW8081B
g-BHC	ND	0.0016	mg/Kg	2	11/20/15 19:11	CE	SW8081B
g-Chlordane	ND	0.004	mg/Kg	2	11/20/15 19:11	CE	SW8081B
Heptachlor	ND	0.008	mg/Kg	2	11/20/15 19:11	CE	SW8081B
Heptachlor epoxide	ND	0.008	mg/Kg	2	11/20/15 19:11	CE	SW8081B
Methoxychlor	ND	0.04	mg/Kg	2	11/20/15 19:11	CE	SW8081B
Toxaphene	ND	0.16	mg/Kg	2	11/20/15 19:11	CE	SW8081B
QA/QC Surrogates							
% DCBP	107		%	2	11/20/15 19:11	CE	30 - 150 %
% TCMX	75		%	2	11/20/15 19:11	CE	30 - 150 %
Volatiles							
1,1,1,2-Tetrachloroethane	ND	0.0043	mg/Kg	1	11/21/15 03:01	JLI	SW8260C
1,1,1-Trichloroethane	ND	0.0043	mg/Kg	1	11/21/15 03:01	JLI	SW8260C
1,1,2,2-Tetrachloroethane	ND	0.0043	mg/Kg	1	11/21/15 03:01	JLI	SW8260C
1,1,2-Trichloroethane	ND	0.0043	mg/Kg	1	11/21/15 03:01	JLI	SW8260C
1,1-Dichloroethane	ND	0.0043	mg/Kg	1	11/21/15 03:01	JLI	SW8260C

Project ID: 526 UNION AVE.
Client ID: SB1 5-7

Phoenix I.D.: BK26196

Parameter	Result	RL/ PQL	Units	Dilution	Date/Time	By	Reference	
1,1-Dichloroethene	ND	0.0043	mg/Kg	1	11/21/15 03:01	JLI	SW8260C	
1,1-Dichloropropene	ND	0.0043	mg/Kg	1	11/21/15 03:01	JLI	SW8260C	
1,2,3-Trichlorobenzene	ND	0.0043	mg/Kg	1	11/21/15 03:01	JLI	SW8260C	
1,2,3-Trichloropropane	ND	0.0043	mg/Kg	1	11/21/15 03:01	JLI	SW8260C	
1,2,4-Trichlorobenzene	ND	0.0043	mg/Kg	1	11/21/15 03:01	JLI	SW8260C	
1,2,4-Trimethylbenzene	ND	0.0043	mg/Kg	1	11/21/15 03:01	JLI	SW8260C	
1,2-Dibromo-3-chloropropane	ND	0.0043	mg/Kg	1	11/21/15 03:01	JLI	SW8260C	
1,2-Dibromoethane	ND	0.0043	mg/Kg	1	11/21/15 03:01	JLI	SW8260C	
1,2-Dichlorobenzene	ND	0.0043	mg/Kg	1	11/21/15 03:01	JLI	SW8260C	
1,2-Dichloroethane	ND	0.0043	mg/Kg	1	11/21/15 03:01	JLI	SW8260C	
1,2-Dichloropropane	ND	0.0043	mg/Kg	1	11/21/15 03:01	JLI	SW8260C	
1,3,5-Trimethylbenzene	ND	0.0043	mg/Kg	1	11/21/15 03:01	JLI	SW8260C	
1,3-Dichlorobenzene	ND	0.0043	mg/Kg	1	11/21/15 03:01	JLI	SW8260C	
1,3-Dichloropropane	ND	0.0043	mg/Kg	1	11/21/15 03:01	JLI	SW8260C	
1,4-Dichlorobenzene	ND	0.0043	mg/Kg	1	11/21/15 03:01	JLI	SW8260C	
2,2-Dichloropropane	ND	0.0043	mg/Kg	1	11/21/15 03:01	JLI	SW8260C	
2-Chlorotoluene	ND	0.0043	mg/Kg	1	11/21/15 03:01	JLI	SW8260C	
2-Hexanone	ND	0.022	mg/Kg	1	11/21/15 03:01	JLI	SW8260C	
2-Isopropyltoluene	ND	0.0043	mg/Kg	1	11/21/15 03:01	JLI	SW8260C	1
4-Chlorotoluene	ND	0.0043	mg/Kg	1	11/21/15 03:01	JLI	SW8260C	
4-Methyl-2-pentanone	ND	0.022	mg/Kg	1	11/21/15 03:01	JLI	SW8260C	
Acetone	ND	0.022	mg/Kg	1	11/21/15 03:01	JLI	SW8260C	
Acrylonitrile	ND	0.0087	mg/Kg	1	11/21/15 03:01	JLI	SW8260C	
Benzene	ND	0.0043	mg/Kg	1	11/21/15 03:01	JLI	SW8260C	
Bromobenzene	ND	0.0043	mg/Kg	1	11/21/15 03:01	JLI	SW8260C	
Bromochloromethane	ND	0.0043	mg/Kg	1	11/21/15 03:01	JLI	SW8260C	
Bromodichloromethane	ND	0.0043	mg/Kg	1	11/21/15 03:01	JLI	SW8260C	
Bromoform	ND	0.0043	mg/Kg	1	11/21/15 03:01	JLI	SW8260C	
Bromomethane	ND	0.0043	mg/Kg	1	11/21/15 03:01	JLI	SW8260C	
Carbon Disulfide	ND	0.0043	mg/Kg	1	11/21/15 03:01	JLI	SW8260C	
Carbon tetrachloride	ND	0.0043	mg/Kg	1	11/21/15 03:01	JLI	SW8260C	
Chlorobenzene	ND	0.0043	mg/Kg	1	11/21/15 03:01	JLI	SW8260C	
Chloroethane	ND	0.0043	mg/Kg	1	11/21/15 03:01	JLI	SW8260C	
Chloroform	ND	0.0043	mg/Kg	1	11/21/15 03:01	JLI	SW8260C	
Chloromethane	ND	0.0043	mg/Kg	1	11/21/15 03:01	JLI	SW8260C	
cis-1,2-Dichloroethene	ND	0.0043	mg/Kg	1	11/21/15 03:01	JLI	SW8260C	
cis-1,3-Dichloropropene	ND	0.0043	mg/Kg	1	11/21/15 03:01	JLI	SW8260C	
Dibromochloromethane	ND	0.0043	mg/Kg	1	11/21/15 03:01	JLI	SW8260C	
Dibromomethane	ND	0.0043	mg/Kg	1	11/21/15 03:01	JLI	SW8260C	
Dichlorodifluoromethane	ND	0.0043	mg/Kg	1	11/21/15 03:01	JLI	SW8260C	
Ethylbenzene	ND	0.0043	mg/Kg	1	11/21/15 03:01	JLI	SW8260C	
Hexachlorobutadiene	ND	0.0043	mg/Kg	1	11/21/15 03:01	JLI	SW8260C	
Isopropylbenzene	ND	0.0043	mg/Kg	1	11/21/15 03:01	JLI	SW8260C	
m&p-Xylene	ND	0.0043	mg/Kg	1	11/21/15 03:01	JLI	SW8260C	
Methyl Ethyl Ketone	ND	0.022	mg/Kg	1	11/21/15 03:01	JLI	SW8260C	
Methyl t-butyl ether (MTBE)	ND	0.0087	mg/Kg	1	11/21/15 03:01	JLI	SW8260C	
Methylene chloride	ND	0.0087	mg/Kg	1	11/21/15 03:01	JLI	SW8260C	
Naphthalene	ND	0.0043	mg/Kg	1	11/21/15 03:01	JLI	SW8260C	
n-Butylbenzene	ND	0.0043	mg/Kg	1	11/21/15 03:01	JLI	SW8260C	

Parameter	Result	RL/ PQL	Units	Dilution	Date/Time	By	Reference	
n-Propylbenzene	ND	0.0043	mg/Kg	1	11/21/15 03:01	JLI	SW8260C	
o-Xylene	ND	0.0043	mg/Kg	1	11/21/15 03:01	JLI	SW8260C	
p-Isopropyltoluene	ND	0.0043	mg/Kg	1	11/21/15 03:01	JLI	SW8260C	
sec-Butylbenzene	ND	0.0043	mg/Kg	1	11/21/15 03:01	JLI	SW8260C	
Styrene	ND	0.0043	mg/Kg	1	11/21/15 03:01	JLI	SW8260C	
tert-Butylbenzene	ND	0.0043	mg/Kg	1	11/21/15 03:01	JLI	SW8260C	
Tetrachloroethene	ND	0.0043	mg/Kg	1	11/21/15 03:01	JLI	SW8260C	
Tetrahydrofuran (THF)	ND	0.0087	mg/Kg	1	11/21/15 03:01	JLI	SW8260C	1
Toluene	ND	0.0043	mg/Kg	1	11/21/15 03:01	JLI	SW8260C	
Total Xylenes	ND	0.0043	mg/Kg	1	11/21/15 03:01	JLI	SW8260C	
trans-1,2-Dichloroethene	ND	0.0043	mg/Kg	1	11/21/15 03:01	JLI	SW8260C	
trans-1,3-Dichloropropene	ND	0.0043	mg/Kg	1	11/21/15 03:01	JLI	SW8260C	
trans-1,4-dichloro-2-butene	ND	0.0087	mg/Kg	1	11/21/15 03:01	JLI	SW8260C	
Trichloroethene	ND	0.0043	mg/Kg	1	11/21/15 03:01	JLI	SW8260C	
Trichlorofluoromethane	ND	0.0043	mg/Kg	1	11/21/15 03:01	JLI	SW8260C	
Trichlorotrifluoroethane	ND	0.0043	mg/Kg	1	11/21/15 03:01	JLI	SW8260C	
Vinyl chloride	ND	0.0043	mg/Kg	1	11/21/15 03:01	JLI	SW8260C	
QA/QC Surrogates								
% 1,2-dichlorobenzene-d4	99		%	1	11/21/15 03:01	JLI	70 - 130 %	
% Bromofluorobenzene	98		%	1	11/21/15 03:01	JLI	70 - 130 %	
% Dibromofluoromethane	96		%	1	11/21/15 03:01	JLI	70 - 130 %	
% Toluene-d8	100		%	1	11/21/15 03:01	JLI	70 - 130 %	

Semivolatiles

1,2,4,5-Tetrachlorobenzene	ND	0.28	mg/Kg	1	11/20/15 02:46	DD	SW8270D
1,2,4-Trichlorobenzene	ND	0.28	mg/Kg	1	11/20/15 02:46	DD	SW8270D
1,2-Dichlorobenzene	ND	0.28	mg/Kg	1	11/20/15 02:46	DD	SW8270D
1,2-Diphenylhydrazine	ND	0.4	mg/Kg	1	11/20/15 02:46	DD	SW8270D
1,3-Dichlorobenzene	ND	0.28	mg/Kg	1	11/20/15 02:46	DD	SW8270D
1,4-Dichlorobenzene	ND	0.28	mg/Kg	1	11/20/15 02:46	DD	SW8270D
2,4,5-Trichlorophenol	ND	0.28	mg/Kg	1	11/20/15 02:46	DD	SW8270D
2,4,6-Trichlorophenol	ND	0.28	mg/Kg	1	11/20/15 02:46	DD	SW8270D
2,4-Dichlorophenol	ND	0.28	mg/Kg	1	11/20/15 02:46	DD	SW8270D
2,4-Dimethylphenol	ND	0.28	mg/Kg	1	11/20/15 02:46	DD	SW8270D
2,4-Dinitrophenol	ND	0.64	mg/Kg	1	11/20/15 02:46	DD	SW8270D
2,4-Dinitrotoluene	ND	0.28	mg/Kg	1	11/20/15 02:46	DD	SW8270D
2,6-Dinitrotoluene	ND	0.28	mg/Kg	1	11/20/15 02:46	DD	SW8270D
2-Chloronaphthalene	ND	0.28	mg/Kg	1	11/20/15 02:46	DD	SW8270D
2-Chlorophenol	ND	0.28	mg/Kg	1	11/20/15 02:46	DD	SW8270D
2-Methylnaphthalene	ND	0.28	mg/Kg	1	11/20/15 02:46	DD	SW8270D
2-Methylphenol (o-cresol)	ND	0.28	mg/Kg	1	11/20/15 02:46	DD	SW8270D
2-Nitroaniline	ND	0.64	mg/Kg	1	11/20/15 02:46	DD	SW8270D
2-Nitrophenol	ND	0.28	mg/Kg	1	11/20/15 02:46	DD	SW8270D
3&4-Methylphenol (m&p-cresol)	ND	0.4	mg/Kg	1	11/20/15 02:46	DD	SW8270D
3,3'-Dichlorobenzidine	ND	0.28	mg/Kg	1	11/20/15 02:46	DD	SW8270D
3-Nitroaniline	ND	0.64	mg/Kg	1	11/20/15 02:46	DD	SW8270D
4,6-Dinitro-2-methylphenol	ND	1.2	mg/Kg	1	11/20/15 02:46	DD	SW8270D
4-Bromophenyl phenyl ether	ND	0.4	mg/Kg	1	11/20/15 02:46	DD	SW8270D
4-Chloro-3-methylphenol	ND	0.28	mg/Kg	1	11/20/15 02:46	DD	SW8270D
4-Chloroaniline	ND	0.28	mg/Kg	1	11/20/15 02:46	DD	SW8270D

Project ID: 526 UNION AVE.
Client ID: SB1 5-7

Phoenix I.D.: BK26196

Parameter	Result	RL/ PQL	Units	Dilution	Date/Time	By	Reference	
4-Chlorophenyl phenyl ether	ND	0.28	mg/Kg	1	11/20/15 02:46	DD	SW8270D	
4-Nitroaniline	ND	0.64	mg/Kg	1	11/20/15 02:46	DD	SW8270D	
4-Nitrophenol	ND	1.2	mg/Kg	1	11/20/15 02:46	DD	SW8270D	
Acenaphthene	ND	0.28	mg/Kg	1	11/20/15 02:46	DD	SW8270D	
Acenaphthylene	ND	0.28	mg/Kg	1	11/20/15 02:46	DD	SW8270D	
Acetophenone	ND	0.28	mg/Kg	1	11/20/15 02:46	DD	SW8270D	
Aniline	ND	1.2	mg/Kg	1	11/20/15 02:46	DD	SW8270D	
Anthracene	ND	0.28	mg/Kg	1	11/20/15 02:46	DD	SW8270D	
Benz(a)anthracene	ND	0.28	mg/Kg	1	11/20/15 02:46	DD	SW8270D	
Benzidine	ND	0.48	mg/Kg	1	11/20/15 02:46	DD	SW8270D	
Benzo(a)pyrene	ND	0.28	mg/Kg	1	11/20/15 02:46	DD	SW8270D	
Benzo(b)fluoranthene	ND	0.28	mg/Kg	1	11/20/15 02:46	DD	SW8270D	
Benzo(ghi)perylene	0.3	0.28	mg/Kg	1	11/20/15 02:46	DD	SW8270D	
Benzo(k)fluoranthene	ND	0.28	mg/Kg	1	11/20/15 02:46	DD	SW8270D	
Benzoic acid	ND	1.2	mg/Kg	1	11/20/15 02:46	DD	SW8270D	1
Benzyl butyl phthalate	ND	0.28	mg/Kg	1	11/20/15 02:46	DD	SW8270D	
Bis(2-chloroethoxy)methane	ND	0.28	mg/Kg	1	11/20/15 02:46	DD	SW8270D	
Bis(2-chloroethyl)ether	ND	0.4	mg/Kg	1	11/20/15 02:46	DD	SW8270D	
Bis(2-chloroisopropyl)ether	ND	0.28	mg/Kg	1	11/20/15 02:46	DD	SW8270D	
Bis(2-ethylhexyl)phthalate	ND	0.28	mg/Kg	1	11/20/15 02:46	DD	SW8270D	
Carbazole	ND	0.6	mg/Kg	1	11/20/15 02:46	DD	SW8270D	
Chrysene	ND	0.28	mg/Kg	1	11/20/15 02:46	DD	SW8270D	
Dibenz(a,h)anthracene	ND	0.28	mg/Kg	1	11/20/15 02:46	DD	SW8270D	
Dibenzofuran	ND	0.28	mg/Kg	1	11/20/15 02:46	DD	SW8270D	
Diethyl phthalate	ND	0.28	mg/Kg	1	11/20/15 02:46	DD	SW8270D	
Dimethylphthalate	ND	0.28	mg/Kg	1	11/20/15 02:46	DD	SW8270D	
Di-n-butylphthalate	ND	0.28	mg/Kg	1	11/20/15 02:46	DD	SW8270D	
Di-n-octylphthalate	ND	0.28	mg/Kg	1	11/20/15 02:46	DD	SW8270D	
Fluoranthene	ND	0.28	mg/Kg	1	11/20/15 02:46	DD	SW8270D	
Fluorene	ND	0.28	mg/Kg	1	11/20/15 02:46	DD	SW8270D	
Hexachlorobenzene	ND	0.28	mg/Kg	1	11/20/15 02:46	DD	SW8270D	
Hexachlorobutadiene	ND	0.28	mg/Kg	1	11/20/15 02:46	DD	SW8270D	
Hexachlorocyclopentadiene	ND	0.28	mg/Kg	1	11/20/15 02:46	DD	SW8270D	
Hexachloroethane	ND	0.28	mg/Kg	1	11/20/15 02:46	DD	SW8270D	
Indeno(1,2,3-cd)pyrene	ND	0.28	mg/Kg	1	11/20/15 02:46	DD	SW8270D	
Isophorone	ND	0.28	mg/Kg	1	11/20/15 02:46	DD	SW8270D	
Naphthalene	ND	0.28	mg/Kg	1	11/20/15 02:46	DD	SW8270D	
Nitrobenzene	ND	0.28	mg/Kg	1	11/20/15 02:46	DD	SW8270D	
N-Nitrosodimethylamine	ND	0.4	mg/Kg	1	11/20/15 02:46	DD	SW8270D	
N-Nitrosodi-n-propylamine	ND	0.28	mg/Kg	1	11/20/15 02:46	DD	SW8270D	
N-Nitrosodiphenylamine	ND	0.4	mg/Kg	1	11/20/15 02:46	DD	SW8270D	
Pentachloronitrobenzene	ND	0.4	mg/Kg	1	11/20/15 02:46	DD	SW8270D	
Pentachlorophenol	ND	0.4	mg/Kg	1	11/20/15 02:46	DD	SW8270D	
Phenanthrene	ND	0.28	mg/Kg	1	11/20/15 02:46	DD	SW8270D	
Phenol	ND	0.28	mg/Kg	1	11/20/15 02:46	DD	SW8270D	
Pyrene	ND	0.28	mg/Kg	1	11/20/15 02:46	DD	SW8270D	
Pyridine	ND	0.4	mg/Kg	1	11/20/15 02:46	DD	SW8270D	
QA/QC Surrogates								
% 2,4,6-Tribromophenol	82		%	1	11/20/15 02:46	DD	30 - 130 %	

Project ID: 526 UNION AVE.
Client ID: SB1 5-7

Phoenix I.D.: BK26196

Parameter	Result	RL/ PQL	Units	Dilution	Date/Time	By	Reference
% 2-Fluorobiphenyl	76		%	1	11/20/15 02:46	DD	30 - 130 %
% 2-Fluorophenol	61		%	1	11/20/15 02:46	DD	30 - 130 %
% Nitrobenzene-d5	68		%	1	11/20/15 02:46	DD	30 - 130 %
% Phenol-d5	70		%	1	11/20/15 02:46	DD	30 - 130 %
% Terphenyl-d14	81		%	1	11/20/15 02:46	DD	30 - 130 %

1 = This parameter is not certified by NY NELAC for this matrix. NY NELAC does not offer certification for all parameters at this time.
B = Present in blank, no bias suspected.

RL/PQL=Reporting/Practical Quantitation Level (Equivalent to NELAC LOQ, Limit of Quanitation) ND=Not Detected BRL=Below Reporting Level
QA/QC Surrogates: Surrogates are compounds (preceeded with a %) added by the lab to determine analysis efficiency. Surrogate results(%) listed in the report are not "detected" compounds.

Comments:

Per 1.4.6 of EPA method 8270D, 1,2-Diphenylhydrazine is unstable and readily converts to Azobenzene. Azobenzene is used for the calibration of 1,2-Diphenylhydrazine.

Please be advised that the NY 375 soil criteria for chromium are based on hexavalent chromium and trivalent chromium.

All soils, solids and sludges are reported on a dry weight basis unless otherwise noted in the sample comments.

If there are any questions regarding this data, please call Phoenix Client Services at extension 200.
This report must not be reproduced except in full as defined by the attached chain of custody.

Phyllis Shiller, Laboratory Director
November 25, 2015
Reviewed and Released by: Bobbi Aloisa, Vice President

PHOENIX

Environmental Laboratories, Inc.
587 East Middle Turnpike, P.O.Box 370, Manchester, CT 06045
Tel. (860) 645-1102 Fax (860) 645-0823

ACCREDITED IN ACCORDANCE WITH nelac NY # 11301

Analysis Report

November 25, 2015

FOR: Attn:
Creative Environmental Solutions
39 West 37th Street, 14th Floor
New York, NY 10018

Sample Information		Custody Information		Date	Time
Matrix:	SOIL	Collected by:		11/18/15	11:48
Location Code:	CREATENV	Received by:	LB	11/19/15	17:04
Rush Request:	72 Hour	Analyzed by:	see "By" below		
P.O.#:					

Laboratory Data

SDG ID: GBK26195
Phoenix ID: BK26197

Project ID: 526 UNION AVE.
Client ID: SB3 0-5

Parameter	Result	RL/ PQL	Units	Dilution	Date/Time	By	Reference	
Silver	< 0.37	0.37	mg/Kg	1	11/20/15 11:37	LK	SW6010C	
Aluminum	7570	56	mg/Kg	10	11/20/15 08:29	LK	SW6010C	
Arsenic	11.6	0.7	mg/Kg	1	11/20/15 11:37	LK	SW6010C	
Barium	128	0.37	mg/Kg	1	11/20/15 11:37	LK	SW6010C	
Beryllium	0.42	0.30	mg/Kg	1	11/20/15 11:37	LK	SW6010C	
Calcium	26800	56	mg/Kg	10	11/20/15 08:29	LK	SW6010C	
Cadmium	2.77	0.37	mg/Kg	1	11/20/15 11:37	LK	SW6010C	
Cobalt	10.2	0.37	mg/Kg	1	11/20/15 11:37	LK	SW6010C	
Chromium	67.9	0.37	mg/Kg	1	11/20/15 11:37	LK	SW6010C	
Copper	93.1	0.37	mg/kg	1	11/20/15 11:37	LK	SW6010C	
Iron	25100	56	mg/Kg	10	11/20/15 08:29	LK	SW6010C	B
Mercury	1.07	0.03	mg/Kg	1	11/23/15 09:50	RS	SW7471B	
Potassium	1350	5.6	mg/Kg	1	11/20/15 11:37	LK	SW6010C	
Magnesium	9060	56	mg/Kg	10	11/20/15 08:29	LK	SW6010C	
Manganese	407	3.7	mg/Kg	10	11/20/15 08:29	LK	SW6010C	
Sodium	201	5.6	mg/Kg	1	11/20/15 11:37	LK	SW6010C	B
Nickel	28.5	0.37	mg/Kg	1	11/20/15 11:37	LK	SW6010C	
Lead	317	3.7	mg/Kg	10	11/20/15 08:29	LK	SW6010C	
Antimony	< 3.7	3.7	mg/Kg	1	11/20/15 11:37	LK	SW6010C	
Selenium	< 1.5	1.5	mg/Kg	1	11/20/15 11:37	LK	SW6010C	
Thallium	< 3.4	3.4	mg/Kg	1	11/20/15 11:37	LK	SW6010C	
Vanadium	35.3	0.37	mg/Kg	1	11/20/15 11:37	LK	SW6010C	
Zinc	755	3.7	mg/Kg	10	11/20/15 08:29	LK	SW6010C	
Percent Solid	89		%		11/20/15 01:40	W	SW846-%Solid	
Soil Extraction for PCB	Completed				11/19/15 00:00	BC	SW3545A	
Soil Extraction for Pesticide	Completed				11/19/15 00:00	BC/V	SW3545A	
Soil Extraction for SVOA	Completed				11/19/15 00:00	BB/CKV	SW3545A	
Mercury Digestion	Completed				11/21/15 00:00	W/W	SW7471B	

Project ID: 526 UNION AVE.
Client ID: SB3 0-5

Phoenix I.D.: BK26197

Parameter	Result	RL/ PQL	Units	Dilution	Date/Time	By	Reference
Total Metals Digest	Completed				11/19/15 00:00	G/AG	SW3050B
Field Extraction	Completed				11/18/15 11:48		SW5035A
Polychlorinated Biphenyls							
PCB-1016	ND	0.075	mg/Kg	2	11/20/15 19:13	AW	SW8082A
PCB-1221	ND	0.075	mg/Kg	2	11/20/15 19:13	AW	SW8082A
PCB-1232	ND	0.075	mg/Kg	2	11/20/15 19:13	AW	SW8082A
PCB-1242	ND	0.075	mg/Kg	2	11/20/15 19:13	AW	SW8082A
PCB-1248	ND	0.075	mg/Kg	2	11/20/15 19:13	AW	SW8082A
PCB-1254	0.17	0.075	mg/Kg	2	11/20/15 19:13	AW	SW8082A
PCB-1260	ND	0.075	mg/Kg	2	11/20/15 19:13	AW	SW8082A
PCB-1262	ND	0.075	mg/Kg	2	11/20/15 19:13	AW	SW8082A
PCB-1268	ND	0.075	mg/Kg	2	11/20/15 19:13	AW	SW8082A
QA/QC Surrogates							
% DCBP	91		%	2	11/20/15 19:13	AW	30 - 150 %
% TCMX	83		%	2	11/20/15 19:13	AW	30 - 150 %
Pesticides - Soil							
4,4' -DDD	ND	0.0022	mg/Kg	2	11/20/15 19:30	CE	SW8081B
4,4' -DDE	ND	0.0022	mg/Kg	2	11/20/15 19:30	CE	SW8081B
4,4' -DDT	ND	0.0022	mg/Kg	2	11/20/15 19:30	CE	SW8081B
a-BHC	ND	0.0075	mg/Kg	2	11/20/15 19:30	CE	SW8081B
a-Chlordane	ND	0.0037	mg/Kg	2	11/20/15 19:30	CE	SW8081B
Aldrin	ND	0.0037	mg/Kg	2	11/20/15 19:30	CE	SW8081B
b-BHC	ND	0.0075	mg/Kg	2	11/20/15 19:30	CE	SW8081B
Chlordane	ND	0.037	mg/Kg	2	11/20/15 19:30	CE	SW8081B
d-BHC	ND	0.0075	mg/Kg	2	11/20/15 19:30	CE	SW8081B
Dieldrin	ND	0.0037	mg/Kg	2	11/20/15 19:30	CE	SW8081B
Endosulfan I	ND	0.0075	mg/Kg	2	11/20/15 19:30	CE	SW8081B
Endosulfan II	ND	0.0075	mg/Kg	2	11/20/15 19:30	CE	SW8081B
Endosulfan sulfate	ND	0.02	mg/Kg	2	11/20/15 19:30	CE	SW8081B
Endrin	ND	0.0075	mg/Kg	2	11/20/15 19:30	CE	SW8081B
Endrin aldehyde	ND	0.0075	mg/Kg	2	11/20/15 19:30	CE	SW8081B
Endrin ketone	ND	0.0075	mg/Kg	2	11/20/15 19:30	CE	SW8081B
g-BHC	ND	0.0015	mg/Kg	2	11/20/15 19:30	CE	SW8081B
g-Chlordane	ND	0.0037	mg/Kg	2	11/20/15 19:30	CE	SW8081B
Heptachlor	ND	0.0075	mg/Kg	2	11/20/15 19:30	CE	SW8081B
Heptachlor epoxide	ND	0.0075	mg/Kg	2	11/20/15 19:30	CE	SW8081B
Methoxychlor	ND	0.037	mg/Kg	2	11/20/15 19:30	CE	SW8081B
Toxaphene	ND	0.15	mg/Kg	2	11/20/15 19:30	CE	SW8081B
QA/QC Surrogates							
% DCBP	104		%	2	11/20/15 19:30	CE	30 - 150 %
% TCMX	77		%	2	11/20/15 19:30	CE	30 - 150 %
Volatiles							
1,1,1,2-Tetrachloroethane	ND	0.55	mg/Kg	50	11/21/15 03:22	JLI	SW8260C
1,1,1-Trichloroethane	ND	0.55	mg/Kg	50	11/21/15 03:22	JLI	SW8260C
1,1,2,2-Tetrachloroethane	ND	0.55	mg/Kg	50	11/21/15 03:22	JLI	SW8260C
1,1,2-Trichloroethane	ND	0.55	mg/Kg	50	11/21/15 03:22	JLI	SW8260C
1,1-Dichloroethane	ND	0.55	mg/Kg	50	11/21/15 03:22	JLI	SW8260C

Project ID: 526 UNION AVE.
Client ID: SB3 0-5

Phoenix I.D.: BK26197

Parameter	Result	RL/ PQL	Units	Dilution	Date/Time	By	Reference	
1,1-Dichloroethene	ND	0.55	mg/Kg	50	11/21/15 03:22	JLI	SW8260C	
1,1-Dichloropropene	ND	0.55	mg/Kg	50	11/21/15 03:22	JLI	SW8260C	
1,2,3-Trichlorobenzene	ND	0.55	mg/Kg	50	11/21/15 03:22	JLI	SW8260C	
1,2,3-Trichloropropane	ND	0.55	mg/Kg	50	11/21/15 03:22	JLI	SW8260C	
1,2,4-Trichlorobenzene	ND	0.55	mg/Kg	50	11/21/15 03:22	JLI	SW8260C	
1,2,4-Trimethylbenzene	ND	0.55	mg/Kg	50	11/21/15 03:22	JLI	SW8260C	
1,2-Dibromo-3-chloropropane	ND	0.55	mg/Kg	50	11/21/15 03:22	JLI	SW8260C	
1,2-Dibromoethane	ND	0.55	mg/Kg	50	11/21/15 03:22	JLI	SW8260C	
1,2-Dichlorobenzene	ND	0.55	mg/Kg	50	11/21/15 03:22	JLI	SW8260C	
1,2-Dichloroethane	ND	0.55	mg/Kg	50	11/21/15 03:22	JLI	SW8260C	
1,2-Dichloropropane	ND	0.55	mg/Kg	50	11/21/15 03:22	JLI	SW8260C	
1,3,5-Trimethylbenzene	ND	0.55	mg/Kg	50	11/21/15 03:22	JLI	SW8260C	
1,3-Dichlorobenzene	ND	0.55	mg/Kg	50	11/21/15 03:22	JLI	SW8260C	
1,3-Dichloropropane	ND	0.55	mg/Kg	50	11/21/15 03:22	JLI	SW8260C	
1,4-Dichlorobenzene	ND	0.55	mg/Kg	50	11/21/15 03:22	JLI	SW8260C	
2,2-Dichloropropane	ND	0.55	mg/Kg	50	11/21/15 03:22	JLI	SW8260C	
2-Chlorotoluene	ND	0.55	mg/Kg	50	11/21/15 03:22	JLI	SW8260C	
2-Hexanone	ND	2.8	mg/Kg	50	11/21/15 03:22	JLI	SW8260C	
2-Isopropyltoluene	ND	0.55	mg/Kg	50	11/21/15 03:22	JLI	SW8260C	1
4-Chlorotoluene	ND	0.55	mg/Kg	50	11/21/15 03:22	JLI	SW8260C	
4-Methyl-2-pentanone	ND	2.8	mg/Kg	50	11/21/15 03:22	JLI	SW8260C	
Acetone	ND	2.8	mg/Kg	50	11/21/15 03:22	JLI	SW8260C	
Acrylonitrile	ND	1.1	mg/Kg	50	11/21/15 03:22	JLI	SW8260C	
Benzene	ND	0.55	mg/Kg	50	11/21/15 03:22	JLI	SW8260C	
Bromobenzene	ND	0.55	mg/Kg	50	11/21/15 03:22	JLI	SW8260C	
Bromochloromethane	ND	0.55	mg/Kg	50	11/21/15 03:22	JLI	SW8260C	
Bromodichloromethane	ND	0.55	mg/Kg	50	11/21/15 03:22	JLI	SW8260C	
Bromoform	ND	0.55	mg/Kg	50	11/21/15 03:22	JLI	SW8260C	
Bromomethane	ND	0.55	mg/Kg	50	11/21/15 03:22	JLI	SW8260C	
Carbon Disulfide	ND	0.55	mg/Kg	50	11/21/15 03:22	JLI	SW8260C	
Carbon tetrachloride	ND	0.55	mg/Kg	50	11/21/15 03:22	JLI	SW8260C	
Chlorobenzene	ND	0.55	mg/Kg	50	11/21/15 03:22	JLI	SW8260C	
Chloroethane	ND	0.55	mg/Kg	50	11/21/15 03:22	JLI	SW8260C	
Chloroform	ND	0.55	mg/Kg	50	11/21/15 03:22	JLI	SW8260C	
Chloromethane	ND	0.55	mg/Kg	50	11/21/15 03:22	JLI	SW8260C	
cis-1,2-Dichloroethene	ND	0.55	mg/Kg	50	11/21/15 03:22	JLI	SW8260C	
cis-1,3-Dichloropropene	ND	0.55	mg/Kg	50	11/21/15 03:22	JLI	SW8260C	
Dibromochloromethane	ND	0.55	mg/Kg	50	11/21/15 03:22	JLI	SW8260C	
Dibromomethane	ND	0.55	mg/Kg	50	11/21/15 03:22	JLI	SW8260C	
Dichlorodifluoromethane	ND	0.55	mg/Kg	50	11/21/15 03:22	JLI	SW8260C	
Ethylbenzene	ND	0.55	mg/Kg	50	11/21/15 03:22	JLI	SW8260C	
Hexachlorobutadiene	ND	0.55	mg/Kg	50	11/21/15 03:22	JLI	SW8260C	
Isopropylbenzene	ND	0.55	mg/Kg	50	11/21/15 03:22	JLI	SW8260C	
m&p-Xylene	ND	0.55	mg/Kg	50	11/21/15 03:22	JLI	SW8260C	
Methyl Ethyl Ketone	ND	2.8	mg/Kg	50	11/21/15 03:22	JLI	SW8260C	
Methyl t-butyl ether (MTBE)	ND	1.1	mg/Kg	50	11/21/15 03:22	JLI	SW8260C	
Methylene chloride	ND	1.1	mg/Kg	50	11/21/15 03:22	JLI	SW8260C	
Naphthalene	ND	0.55	mg/Kg	50	11/21/15 03:22	JLI	SW8260C	
n-Butylbenzene	ND	0.55	mg/Kg	50	11/21/15 03:22	JLI	SW8260C	

Parameter	Result	RL/ PQL	Units	Dilution	Date/Time	By	Reference	
n-Propylbenzene	ND	0.55	mg/Kg	50	11/21/15 03:22	JLI	SW8260C	
o-Xylene	ND	0.55	mg/Kg	50	11/21/15 03:22	JLI	SW8260C	
p-Isopropyltoluene	ND	0.55	mg/Kg	50	11/21/15 03:22	JLI	SW8260C	
sec-Butylbenzene	ND	0.55	mg/Kg	50	11/21/15 03:22	JLI	SW8260C	
Styrene	ND	0.55	mg/Kg	50	11/21/15 03:22	JLI	SW8260C	
tert-Butylbenzene	ND	0.55	mg/Kg	50	11/21/15 03:22	JLI	SW8260C	
Tetrachloroethene	ND	0.55	mg/Kg	50	11/21/15 03:22	JLI	SW8260C	
Tetrahydrofuran (THF)	ND	1.1	mg/Kg	50	11/21/15 03:22	JLI	SW8260C	1
Toluene	ND	0.55	mg/Kg	50	11/21/15 03:22	JLI	SW8260C	
Total Xylenes	ND	0.55	mg/Kg	50	11/21/15 03:22	JLI	SW8260C	
trans-1,2-Dichloroethene	ND	0.55	mg/Kg	50	11/21/15 03:22	JLI	SW8260C	
trans-1,3-Dichloropropene	ND	0.55	mg/Kg	50	11/21/15 03:22	JLI	SW8260C	
trans-1,4-dichloro-2-butene	ND	1.1	mg/Kg	50	11/21/15 03:22	JLI	SW8260C	
Trichloroethene	ND	0.55	mg/Kg	50	11/21/15 03:22	JLI	SW8260C	
Trichlorofluoromethane	ND	0.55	mg/Kg	50	11/21/15 03:22	JLI	SW8260C	
Trichlorotrifluoroethane	ND	0.55	mg/Kg	50	11/21/15 03:22	JLI	SW8260C	
Vinyl chloride	ND	0.55	mg/Kg	50	11/21/15 03:22	JLI	SW8260C	
QA/QC Surrogates								
% 1,2-dichlorobenzene-d4	98		%	50	11/21/15 03:22	JLI	70 - 130 %	
% Bromofluorobenzene	117		%	50	11/21/15 03:22	JLI	70 - 130 %	
% Dibromofluoromethane	94		%	50	11/21/15 03:22	JLI	70 - 130 %	
% Toluene-d8	103		%	50	11/21/15 03:22	JLI	70 - 130 %	

Semivolatiles

1,2,4,5-Tetrachlorobenzene	ND	0.26	mg/Kg	1	11/20/15 03:09	DD	SW8270D
1,2,4-Trichlorobenzene	ND	0.26	mg/Kg	1	11/20/15 03:09	DD	SW8270D
1,2-Dichlorobenzene	ND	0.26	mg/Kg	1	11/20/15 03:09	DD	SW8270D
1,2-Diphenylhydrazine	ND	0.37	mg/Kg	1	11/20/15 03:09	DD	SW8270D
1,3-Dichlorobenzene	ND	0.26	mg/Kg	1	11/20/15 03:09	DD	SW8270D
1,4-Dichlorobenzene	ND	0.26	mg/Kg	1	11/20/15 03:09	DD	SW8270D
2,4,5-Trichlorophenol	ND	0.26	mg/Kg	1	11/20/15 03:09	DD	SW8270D
2,4,6-Trichlorophenol	ND	0.26	mg/Kg	1	11/20/15 03:09	DD	SW8270D
2,4-Dichlorophenol	ND	0.26	mg/Kg	1	11/20/15 03:09	DD	SW8270D
2,4-Dimethylphenol	ND	0.26	mg/Kg	1	11/20/15 03:09	DD	SW8270D
2,4-Dinitrophenol	ND	0.59	mg/Kg	1	11/20/15 03:09	DD	SW8270D
2,4-Dinitrotoluene	ND	0.26	mg/Kg	1	11/20/15 03:09	DD	SW8270D
2,6-Dinitrotoluene	ND	0.26	mg/Kg	1	11/20/15 03:09	DD	SW8270D
2-Chloronaphthalene	ND	0.26	mg/Kg	1	11/20/15 03:09	DD	SW8270D
2-Chlorophenol	ND	0.26	mg/Kg	1	11/20/15 03:09	DD	SW8270D
2-Methylnaphthalene	ND	0.26	mg/Kg	1	11/20/15 03:09	DD	SW8270D
2-Methylphenol (o-cresol)	ND	0.26	mg/Kg	1	11/20/15 03:09	DD	SW8270D
2-Nitroaniline	ND	0.59	mg/Kg	1	11/20/15 03:09	DD	SW8270D
2-Nitrophenol	ND	0.26	mg/Kg	1	11/20/15 03:09	DD	SW8270D
3&4-Methylphenol (m&p-cresol)	ND	0.37	mg/Kg	1	11/20/15 03:09	DD	SW8270D
3,3'-Dichlorobenzidine	ND	0.26	mg/Kg	1	11/20/15 03:09	DD	SW8270D
3-Nitroaniline	ND	0.59	mg/Kg	1	11/20/15 03:09	DD	SW8270D
4,6-Dinitro-2-methylphenol	ND	1.1	mg/Kg	1	11/20/15 03:09	DD	SW8270D
4-Bromophenyl phenyl ether	ND	0.37	mg/Kg	1	11/20/15 03:09	DD	SW8270D
4-Chloro-3-methylphenol	ND	0.26	mg/Kg	1	11/20/15 03:09	DD	SW8270D
4-Chloroaniline	ND	0.26	mg/Kg	1	11/20/15 03:09	DD	SW8270D

Project ID: 526 UNION AVE.
Client ID: SB3 0-5

Phoenix I.D.: BK26197

Parameter	Result	RL/ PQL	Units	Dilution	Date/Time	By	Reference	
4-Chlorophenyl phenyl ether	ND	0.26	mg/Kg	1	11/20/15 03:09	DD	SW8270D	
4-Nitroaniline	ND	0.59	mg/Kg	1	11/20/15 03:09	DD	SW8270D	
4-Nitrophenol	ND	1.1	mg/Kg	1	11/20/15 03:09	DD	SW8270D	
Acenaphthene	0.32	0.26	mg/Kg	1	11/20/15 03:09	DD	SW8270D	
Acenaphthylene	ND	0.26	mg/Kg	1	11/20/15 03:09	DD	SW8270D	
Acetophenone	ND	0.26	mg/Kg	1	11/20/15 03:09	DD	SW8270D	
Aniline	ND	1.1	mg/Kg	1	11/20/15 03:09	DD	SW8270D	
Anthracene	0.43	0.26	mg/Kg	1	11/20/15 03:09	DD	SW8270D	
Benz(a)anthracene	1	0.26	mg/Kg	1	11/20/15 03:09	DD	SW8270D	
Benzidine	ND	0.44	mg/Kg	1	11/20/15 03:09	DD	SW8270D	
Benzo(a)pyrene	0.91	0.26	mg/Kg	1	11/20/15 03:09	DD	SW8270D	
Benzo(b)fluoranthene	1	0.26	mg/Kg	1	11/20/15 03:09	DD	SW8270D	
Benzo(ghi)perylene	0.42	0.26	mg/Kg	1	11/20/15 03:09	DD	SW8270D	
Benzo(k)fluoranthene	0.91	0.26	mg/Kg	1	11/20/15 03:09	DD	SW8270D	
Benzoic acid	ND	1.1	mg/Kg	1	11/20/15 03:09	DD	SW8270D	1
Benzyl butyl phthalate	ND	0.26	mg/Kg	1	11/20/15 03:09	DD	SW8270D	
Bis(2-chloroethoxy)methane	ND	0.26	mg/Kg	1	11/20/15 03:09	DD	SW8270D	
Bis(2-chloroethyl)ether	ND	0.37	mg/Kg	1	11/20/15 03:09	DD	SW8270D	
Bis(2-chloroisopropyl)ether	ND	0.26	mg/Kg	1	11/20/15 03:09	DD	SW8270D	
Bis(2-ethylhexyl)phthalate	ND	0.26	mg/Kg	1	11/20/15 03:09	DD	SW8270D	
Carbazole	ND	0.55	mg/Kg	1	11/20/15 03:09	DD	SW8270D	
Chrysene	1.3	0.26	mg/Kg	1	11/20/15 03:09	DD	SW8270D	
Dibenz(a,h)anthracene	ND	0.26	mg/Kg	1	11/20/15 03:09	DD	SW8270D	
Dibenzofuran	ND	0.26	mg/Kg	1	11/20/15 03:09	DD	SW8270D	
Diethyl phthalate	ND	0.26	mg/Kg	1	11/20/15 03:09	DD	SW8270D	
Dimethylphthalate	ND	0.26	mg/Kg	1	11/20/15 03:09	DD	SW8270D	
Di-n-butylphthalate	ND	0.26	mg/Kg	1	11/20/15 03:09	DD	SW8270D	
Di-n-octylphthalate	ND	0.26	mg/Kg	1	11/20/15 03:09	DD	SW8270D	
Fluoranthene	2.8	0.26	mg/Kg	1	11/20/15 03:09	DD	SW8270D	
Fluorene	0.32	0.26	mg/Kg	1	11/20/15 03:09	DD	SW8270D	
Hexachlorobenzene	ND	0.26	mg/Kg	1	11/20/15 03:09	DD	SW8270D	
Hexachlorobutadiene	ND	0.26	mg/Kg	1	11/20/15 03:09	DD	SW8270D	
Hexachlorocyclopentadiene	ND	0.26	mg/Kg	1	11/20/15 03:09	DD	SW8270D	
Hexachloroethane	ND	0.26	mg/Kg	1	11/20/15 03:09	DD	SW8270D	
Indeno(1,2,3-cd)pyrene	0.46	0.26	mg/Kg	1	11/20/15 03:09	DD	SW8270D	
Isophorone	ND	0.26	mg/Kg	1	11/20/15 03:09	DD	SW8270D	
Naphthalene	ND	0.26	mg/Kg	1	11/20/15 03:09	DD	SW8270D	
Nitrobenzene	ND	0.26	mg/Kg	1	11/20/15 03:09	DD	SW8270D	
N-Nitrosodimethylamine	ND	0.37	mg/Kg	1	11/20/15 03:09	DD	SW8270D	
N-Nitrosodi-n-propylamine	ND	0.26	mg/Kg	1	11/20/15 03:09	DD	SW8270D	
N-Nitrosodiphenylamine	ND	0.37	mg/Kg	1	11/20/15 03:09	DD	SW8270D	
Pentachloronitrobenzene	ND	0.37	mg/Kg	1	11/20/15 03:09	DD	SW8270D	
Pentachlorophenol	ND	0.37	mg/Kg	1	11/20/15 03:09	DD	SW8270D	
Phenanthrene	2.8	0.26	mg/Kg	1	11/20/15 03:09	DD	SW8270D	
Phenol	ND	0.26	mg/Kg	1	11/20/15 03:09	DD	SW8270D	
Pyrene	2.4	0.26	mg/Kg	1	11/20/15 03:09	DD	SW8270D	
Pyridine	ND	0.37	mg/Kg	1	11/20/15 03:09	DD	SW8270D	
QA/QC Surrogates								
% 2,4,6-Tribromophenol	82		%	1	11/20/15 03:09	DD	30 - 130 %	

Project ID: 526 UNION AVE.
Client ID: SB3 0-5

Phoenix I.D.: BK26197

Parameter	Result	RL/ PQL	Units	Dilution	Date/Time	By	Reference
% 2-Fluorobiphenyl	71		%	1	11/20/15 03:09	DD	30 - 130 %
% 2-Fluorophenol	61		%	1	11/20/15 03:09	DD	30 - 130 %
% Nitrobenzene-d5	71		%	1	11/20/15 03:09	DD	30 - 130 %
% Phenol-d5	66		%	1	11/20/15 03:09	DD	30 - 130 %
% Terphenyl-d14	75		%	1	11/20/15 03:09	DD	30 - 130 %

1 = This parameter is not certified by NY NELAC for this matrix. NY NELAC does not offer certification for all parameters at this time.
B = Present in blank, no bias suspected.

RL/PQL=Reporting/Practical Quantitation Level (Equivalent to NELAC LOQ, Limit of Quanitation) ND=Not Detected BRL=Below Reporting Level
QA/QC Surrogates: Surrogates are compounds (preceeded with a %) added by the lab to determine analysis efficiency. Surrogate results(%) listed in the report are not "detected" compounds.

Comments:

Per 1.4.6 of EPA method 8270D, 1,2-Diphenylhydrazine is unstable and readily converts to Azobenzene. Azobenzene is used for the calibration of 1,2-Diphenylhydrazine.

Please be advised that the NY 375 soil criteria for chromium are based on hexavalent chromium and trivalent chromium.

Volatile Comment:
Elevated reporting limits for volatiles due to the presence of non-target compounds.

All soils, solids and sludges are reported on a dry weight basis unless otherwise noted in the sample comments.

If there are any questions regarding this data, please call Phoenix Client Services at extension 200.
This report must not be reproduced except in full as defined by the attached chain of custody.

Phyllis Shiller, Laboratory Director
November 25, 2015
Reviewed and Released by: Bobbi Aloisa, Vice President

PHOENIX

Environmental Laboratories, Inc.
587 East Middle Turnpike, P.O.Box 370, Manchester, CT 06045
Tel. (860) 645-1102 Fax (860) 645-0823

ACCREDITED IN ACCORDANCE WITH nelac NY # 11301

Analysis Report

November 25, 2015

FOR: Attn:
Creative Environmental Solutions
39 West 37th Street, 14th Floor
New York, NY 10018

Sample Information		Custody Information		Date	Time
Matrix:	SOIL	Collected by:		11/18/15	12:00
Location Code:	CREATENV	Received by:	LB	11/19/15	17:04
Rush Request:	72 Hour	Analyzed by:	see "By" below		
P.O.#:					

Laboratory Data

SDG ID: GBK26195
Phoenix ID: BK26198

Project ID: 526 UNION AVE.
Client ID: SB3 7-8

Parameter	Result	RL/ PQL	Units	Dilution	Date/Time	By	Reference	
Silver	< 0.38	0.38	mg/Kg	1	11/20/15 11:40	LK	SW6010C	
Aluminum	9790	57	mg/Kg	10	11/20/15 08:32	LK	SW6010C	
Arsenic	4.1	0.8	mg/Kg	1	11/20/15 11:40	LK	SW6010C	
Barium	102	0.38	mg/Kg	1	11/20/15 11:40	LK	SW6010C	
Beryllium	0.53	0.31	mg/Kg	1	11/20/15 11:40	LK	SW6010C	
Calcium	6160	5.7	mg/Kg	1	11/20/15 11:40	LK	SW6010C	
Cadmium	< 0.38	0.38	mg/Kg	1	11/20/15 11:40	LK	SW6010C	
Cobalt	7.84	0.38	mg/Kg	1	11/20/15 11:40	LK	SW6010C	
Chromium	26.8	0.38	mg/Kg	1	11/20/15 11:40	LK	SW6010C	
Copper	29.4	0.38	mg/kg	1	11/20/15 11:40	LK	SW6010C	
Iron	18500	57	mg/Kg	10	11/20/15 08:32	LK	SW6010C	B
Mercury	0.66	0.03	mg/Kg	1	11/23/15 09:52	RS	SW7471B	
Potassium	1170	5.7	mg/Kg	1	11/20/15 11:40	LK	SW6010C	
Magnesium	3370	5.7	mg/Kg	1	11/20/15 11:40	LK	SW6010C	
Manganese	294	3.8	mg/Kg	10	11/20/15 08:32	LK	SW6010C	
Sodium	199	5.7	mg/Kg	1	11/20/15 11:40	LK	SW6010C	B
Nickel	15.0	0.38	mg/Kg	1	11/20/15 11:40	LK	SW6010C	
Lead	90.1	0.38	mg/Kg	1	11/20/15 11:40	LK	SW6010C	
Antimony	< 3.8	3.8	mg/Kg	1	11/20/15 11:40	LK	SW6010C	
Selenium	< 1.5	1.5	mg/Kg	1	11/20/15 11:40	LK	SW6010C	
Thallium	< 3.4	3.4	mg/Kg	1	11/20/15 11:40	LK	SW6010C	
Vanadium	34.3	0.38	mg/Kg	1	11/20/15 11:40	LK	SW6010C	
Zinc	60.0	0.38	mg/Kg	1	11/20/15 11:40	LK	SW6010C	
Percent Solid	84		%		11/20/15 01:40	W	SW846-%Solid	
Soil Extraction for PCB	Completed				11/19/15 00:00	BC	SW3545A	
Soil Extraction for Pesticide	Completed				11/19/15 00:00	BC/V	SW3545A	
Soil Extraction for SVOA	Completed				11/19/15 00:00	BB/CKV	SW3545A	
Mercury Digestion	Completed				11/21/15 00:00	W/W	SW7471B	

Project ID: 526 UNION AVE.
Client ID: SB3 7-8

Phoenix I.D.: BK26198

Parameter	Result	RL/ PQL	Units	Dilution	Date/Time	By	Reference
Total Metals Digest	Completed				11/19/15 00:00	G/AG	SW3050B
Field Extraction	Completed				11/18/15 12:00		SW5035A
Polychlorinated Biphenyls							
PCB-1016	ND	0.078	mg/Kg	2	11/20/15 21:38	AW	SW8082A
PCB-1221	ND	0.078	mg/Kg	2	11/20/15 21:38	AW	SW8082A
PCB-1232	ND	0.078	mg/Kg	2	11/20/15 21:38	AW	SW8082A
PCB-1242	ND	0.078	mg/Kg	2	11/20/15 21:38	AW	SW8082A
PCB-1248	ND	0.078	mg/Kg	2	11/20/15 21:38	AW	SW8082A
PCB-1254	ND	0.078	mg/Kg	2	11/20/15 21:38	AW	SW8082A
PCB-1260	ND	0.078	mg/Kg	2	11/20/15 21:38	AW	SW8082A
PCB-1262	ND	0.078	mg/Kg	2	11/20/15 21:38	AW	SW8082A
PCB-1268	ND	0.078	mg/Kg	2	11/20/15 21:38	AW	SW8082A
QA/QC Surrogates							
% DCBP	80		%	2	11/20/15 21:38	AW	30 - 150 %
% TCMX	80		%	2	11/20/15 21:38	AW	30 - 150 %
Pesticides - Soil							
4,4' -DDD	ND	0.0023	mg/Kg	2	11/20/15 21:03	CE	SW8081B
4,4' -DDE	ND	0.0023	mg/Kg	2	11/20/15 21:03	CE	SW8081B
4,4' -DDT	ND	0.0023	mg/Kg	2	11/20/15 21:03	CE	SW8081B
a-BHC	ND	0.0078	mg/Kg	2	11/20/15 21:03	CE	SW8081B
a-Chlordane	ND	0.0039	mg/Kg	2	11/20/15 21:03	CE	SW8081B
Aldrin	ND	0.0039	mg/Kg	2	11/20/15 21:03	CE	SW8081B
b-BHC	ND	0.0078	mg/Kg	2	11/20/15 21:03	CE	SW8081B
Chlordane	ND	0.039	mg/Kg	2	11/20/15 21:03	CE	SW8081B
d-BHC	ND	0.0078	mg/Kg	2	11/20/15 21:03	CE	SW8081B
Dieldrin	ND	0.0039	mg/Kg	2	11/20/15 21:03	CE	SW8081B
Endosulfan I	ND	0.0078	mg/Kg	2	11/20/15 21:03	CE	SW8081B
Endosulfan II	ND	0.0078	mg/Kg	2	11/20/15 21:03	CE	SW8081B
Endosulfan sulfate	ND	0.0078	mg/Kg	2	11/20/15 21:03	CE	SW8081B
Endrin	ND	0.0078	mg/Kg	2	11/20/15 21:03	CE	SW8081B
Endrin aldehyde	ND	0.0078	mg/Kg	2	11/20/15 21:03	CE	SW8081B
Endrin ketone	ND	0.0078	mg/Kg	2	11/20/15 21:03	CE	SW8081B
g-BHC	ND	0.0016	mg/Kg	2	11/20/15 21:03	CE	SW8081B
g-Chlordane	ND	0.0039	mg/Kg	2	11/20/15 21:03	CE	SW8081B
Heptachlor	ND	0.0078	mg/Kg	2	11/20/15 21:03	CE	SW8081B
Heptachlor epoxide	ND	0.0078	mg/Kg	2	11/20/15 21:03	CE	SW8081B
Methoxychlor	ND	0.039	mg/Kg	2	11/20/15 21:03	CE	SW8081B
Toxaphene	ND	0.16	mg/Kg	2	11/20/15 21:03	CE	SW8081B
QA/QC Surrogates							
% DCBP	79		%	2	11/20/15 21:03	CE	30 - 150 %
% TCMX	69		%	2	11/20/15 21:03	CE	30 - 150 %
Volatiles							
1,1,1,2-Tetrachloroethane	ND	0.0046	mg/Kg	1	11/21/15 03:43	JLI	SW8260C
1,1,1-Trichloroethane	ND	0.0046	mg/Kg	1	11/21/15 03:43	JLI	SW8260C
1,1,2,2-Tetrachloroethane	ND	0.0046	mg/Kg	1	11/21/15 03:43	JLI	SW8260C
1,1,2-Trichloroethane	ND	0.0046	mg/Kg	1	11/21/15 03:43	JLI	SW8260C
1,1-Dichloroethane	ND	0.0046	mg/Kg	1	11/21/15 03:43	JLI	SW8260C

Project ID: 526 UNION AVE.
Client ID: SB3 7-8

Phoenix I.D.: BK26198

Parameter	Result	RL/ PQL	Units	Dilution	Date/Time	By	Reference	
1,1-Dichloroethene	ND	0.0046	mg/Kg	1	11/21/15 03:43	JLI	SW8260C	
1,1-Dichloropropene	ND	0.0046	mg/Kg	1	11/21/15 03:43	JLI	SW8260C	
1,2,3-Trichlorobenzene	ND	0.0046	mg/Kg	1	11/21/15 03:43	JLI	SW8260C	
1,2,3-Trichloropropane	ND	0.0046	mg/Kg	1	11/21/15 03:43	JLI	SW8260C	
1,2,4-Trichlorobenzene	ND	0.0046	mg/Kg	1	11/21/15 03:43	JLI	SW8260C	
1,2,4-Trimethylbenzene	ND	0.0046	mg/Kg	1	11/21/15 03:43	JLI	SW8260C	
1,2-Dibromo-3-chloropropane	ND	0.0046	mg/Kg	1	11/21/15 03:43	JLI	SW8260C	
1,2-Dibromoethane	ND	0.0046	mg/Kg	1	11/21/15 03:43	JLI	SW8260C	
1,2-Dichlorobenzene	ND	0.0046	mg/Kg	1	11/21/15 03:43	JLI	SW8260C	
1,2-Dichloroethane	ND	0.0046	mg/Kg	1	11/21/15 03:43	JLI	SW8260C	
1,2-Dichloropropane	ND	0.0046	mg/Kg	1	11/21/15 03:43	JLI	SW8260C	
1,3,5-Trimethylbenzene	ND	0.0046	mg/Kg	1	11/21/15 03:43	JLI	SW8260C	
1,3-Dichlorobenzene	ND	0.0046	mg/Kg	1	11/21/15 03:43	JLI	SW8260C	
1,3-Dichloropropane	ND	0.0046	mg/Kg	1	11/21/15 03:43	JLI	SW8260C	
1,4-Dichlorobenzene	ND	0.0046	mg/Kg	1	11/21/15 03:43	JLI	SW8260C	
2,2-Dichloropropane	ND	0.0046	mg/Kg	1	11/21/15 03:43	JLI	SW8260C	
2-Chlorotoluene	ND	0.0046	mg/Kg	1	11/21/15 03:43	JLI	SW8260C	
2-Hexanone	ND	0.023	mg/Kg	1	11/21/15 03:43	JLI	SW8260C	
2-Isopropyltoluene	ND	0.0046	mg/Kg	1	11/21/15 03:43	JLI	SW8260C	1
4-Chlorotoluene	ND	0.0046	mg/Kg	1	11/21/15 03:43	JLI	SW8260C	
4-Methyl-2-pentanone	ND	0.023	mg/Kg	1	11/21/15 03:43	JLI	SW8260C	
Acetone	ND	0.023	mg/Kg	1	11/21/15 03:43	JLI	SW8260C	
Acrylonitrile	ND	0.0093	mg/Kg	1	11/21/15 03:43	JLI	SW8260C	
Benzene	ND	0.0046	mg/Kg	1	11/21/15 03:43	JLI	SW8260C	
Bromobenzene	ND	0.0046	mg/Kg	1	11/21/15 03:43	JLI	SW8260C	
Bromochloromethane	ND	0.0046	mg/Kg	1	11/21/15 03:43	JLI	SW8260C	
Bromodichloromethane	ND	0.0046	mg/Kg	1	11/21/15 03:43	JLI	SW8260C	
Bromoform	ND	0.0046	mg/Kg	1	11/21/15 03:43	JLI	SW8260C	
Bromomethane	ND	0.0046	mg/Kg	1	11/21/15 03:43	JLI	SW8260C	
Carbon Disulfide	ND	0.0046	mg/Kg	1	11/21/15 03:43	JLI	SW8260C	
Carbon tetrachloride	ND	0.0046	mg/Kg	1	11/21/15 03:43	JLI	SW8260C	
Chlorobenzene	ND	0.0046	mg/Kg	1	11/21/15 03:43	JLI	SW8260C	
Chloroethane	ND	0.0046	mg/Kg	1	11/21/15 03:43	JLI	SW8260C	
Chloroform	ND	0.0046	mg/Kg	1	11/21/15 03:43	JLI	SW8260C	
Chloromethane	ND	0.0046	mg/Kg	1	11/21/15 03:43	JLI	SW8260C	
cis-1,2-Dichloroethene	ND	0.0046	mg/Kg	1	11/21/15 03:43	JLI	SW8260C	
cis-1,3-Dichloropropene	ND	0.0046	mg/Kg	1	11/21/15 03:43	JLI	SW8260C	
Dibromochloromethane	ND	0.0046	mg/Kg	1	11/21/15 03:43	JLI	SW8260C	
Dibromomethane	ND	0.0046	mg/Kg	1	11/21/15 03:43	JLI	SW8260C	
Dichlorodifluoromethane	ND	0.0046	mg/Kg	1	11/21/15 03:43	JLI	SW8260C	
Ethylbenzene	ND	0.0046	mg/Kg	1	11/21/15 03:43	JLI	SW8260C	
Hexachlorobutadiene	ND	0.0046	mg/Kg	1	11/21/15 03:43	JLI	SW8260C	
Isopropylbenzene	ND	0.0046	mg/Kg	1	11/21/15 03:43	JLI	SW8260C	
m&p-Xylene	ND	0.0046	mg/Kg	1	11/21/15 03:43	JLI	SW8260C	
Methyl Ethyl Ketone	ND	0.023	mg/Kg	1	11/21/15 03:43	JLI	SW8260C	
Methyl t-butyl ether (MTBE)	ND	0.0093	mg/Kg	1	11/21/15 03:43	JLI	SW8260C	
Methylene chloride	ND	0.0093	mg/Kg	1	11/21/15 03:43	JLI	SW8260C	
Naphthalene	ND	0.0046	mg/Kg	1	11/21/15 03:43	JLI	SW8260C	
n-Butylbenzene	ND	0.0046	mg/Kg	1	11/21/15 03:43	JLI	SW8260C	

Parameter	Result	RL/ PQL	Units	Dilution	Date/Time	By	Reference	
n-Propylbenzene	ND	0.0046	mg/Kg	1	11/21/15 03:43	JLI	SW8260C	
o-Xylene	ND	0.0046	mg/Kg	1	11/21/15 03:43	JLI	SW8260C	
p-Isopropyltoluene	ND	0.0046	mg/Kg	1	11/21/15 03:43	JLI	SW8260C	
sec-Butylbenzene	ND	0.0046	mg/Kg	1	11/21/15 03:43	JLI	SW8260C	
Styrene	ND	0.0046	mg/Kg	1	11/21/15 03:43	JLI	SW8260C	
tert-Butylbenzene	ND	0.0046	mg/Kg	1	11/21/15 03:43	JLI	SW8260C	
Tetrachloroethene	ND	0.0046	mg/Kg	1	11/21/15 03:43	JLI	SW8260C	
Tetrahydrofuran (THF)	ND	0.0093	mg/Kg	1	11/21/15 03:43	JLI	SW8260C	1
Toluene	ND	0.0046	mg/Kg	1	11/21/15 03:43	JLI	SW8260C	
Total Xylenes	ND	0.0046	mg/Kg	1	11/21/15 03:43	JLI	SW8260C	
trans-1,2-Dichloroethene	ND	0.0046	mg/Kg	1	11/21/15 03:43	JLI	SW8260C	
trans-1,3-Dichloropropene	ND	0.0046	mg/Kg	1	11/21/15 03:43	JLI	SW8260C	
trans-1,4-dichloro-2-butene	ND	0.0093	mg/Kg	1	11/21/15 03:43	JLI	SW8260C	
Trichloroethene	ND	0.0046	mg/Kg	1	11/21/15 03:43	JLI	SW8260C	
Trichlorofluoromethane	ND	0.0046	mg/Kg	1	11/21/15 03:43	JLI	SW8260C	
Trichlorotrifluoroethane	ND	0.0046	mg/Kg	1	11/21/15 03:43	JLI	SW8260C	
Vinyl chloride	ND	0.0046	mg/Kg	1	11/21/15 03:43	JLI	SW8260C	
QA/QC Surrogates								
% 1,2-dichlorobenzene-d4	98		%	1	11/21/15 03:43	JLI	70 - 130 %	
% Bromofluorobenzene	99		%	1	11/21/15 03:43	JLI	70 - 130 %	
% Dibromofluoromethane	100		%	1	11/21/15 03:43	JLI	70 - 130 %	
% Toluene-d8	101		%	1	11/21/15 03:43	JLI	70 - 130 %	

Semivolatiles

1,2,4,5-Tetrachlorobenzene	ND	0.28	mg/Kg	1	11/20/15 17:18	DD	SW8270D
1,2,4-Trichlorobenzene	ND	0.28	mg/Kg	1	11/20/15 17:18	DD	SW8270D
1,2-Dichlorobenzene	ND	0.28	mg/Kg	1	11/20/15 17:18	DD	SW8270D
1,2-Diphenylhydrazine	ND	0.39	mg/Kg	1	11/20/15 17:18	DD	SW8270D
1,3-Dichlorobenzene	ND	0.28	mg/Kg	1	11/20/15 17:18	DD	SW8270D
1,4-Dichlorobenzene	ND	0.28	mg/Kg	1	11/20/15 17:18	DD	SW8270D
2,4,5-Trichlorophenol	ND	0.28	mg/Kg	1	11/20/15 17:18	DD	SW8270D
2,4,6-Trichlorophenol	ND	0.28	mg/Kg	1	11/20/15 17:18	DD	SW8270D
2,4-Dichlorophenol	ND	0.28	mg/Kg	1	11/20/15 17:18	DD	SW8270D
2,4-Dimethylphenol	ND	0.28	mg/Kg	1	11/20/15 17:18	DD	SW8270D
2,4-Dinitrophenol	ND	0.63	mg/Kg	1	11/20/15 17:18	DD	SW8270D
2,4-Dinitrotoluene	ND	0.28	mg/Kg	1	11/20/15 17:18	DD	SW8270D
2,6-Dinitrotoluene	ND	0.28	mg/Kg	1	11/20/15 17:18	DD	SW8270D
2-Chloronaphthalene	ND	0.28	mg/Kg	1	11/20/15 17:18	DD	SW8270D
2-Chlorophenol	ND	0.28	mg/Kg	1	11/20/15 17:18	DD	SW8270D
2-Methylnaphthalene	ND	0.28	mg/Kg	1	11/20/15 17:18	DD	SW8270D
2-Methylphenol (o-cresol)	ND	0.28	mg/Kg	1	11/20/15 17:18	DD	SW8270D
2-Nitroaniline	ND	0.63	mg/Kg	1	11/20/15 17:18	DD	SW8270D
2-Nitrophenol	ND	0.28	mg/Kg	1	11/20/15 17:18	DD	SW8270D
3&4-Methylphenol (m&p-cresol)	ND	0.39	mg/Kg	1	11/20/15 17:18	DD	SW8270D
3,3'-Dichlorobenzidine	ND	0.28	mg/Kg	1	11/20/15 17:18	DD	SW8270D
3-Nitroaniline	ND	0.63	mg/Kg	1	11/20/15 17:18	DD	SW8270D
4,6-Dinitro-2-methylphenol	ND	1.1	mg/Kg	1	11/20/15 17:18	DD	SW8270D
4-Bromophenyl phenyl ether	ND	0.39	mg/Kg	1	11/20/15 17:18	DD	SW8270D
4-Chloro-3-methylphenol	ND	0.28	mg/Kg	1	11/20/15 17:18	DD	SW8270D
4-Chloroaniline	ND	0.28	mg/Kg	1	11/20/15 17:18	DD	SW8270D

Project ID: 526 UNION AVE.
Client ID: SB3 7-8

Phoenix I.D.: BK26198

Parameter	Result	RL/ PQL	Units	Dilution	Date/Time	By	Reference	
4-Chlorophenyl phenyl ether	ND	0.28	mg/Kg	1	11/20/15 17:18	DD	SW8270D	
4-Nitroaniline	ND	0.63	mg/Kg	1	11/20/15 17:18	DD	SW8270D	
4-Nitrophenol	ND	1.1	mg/Kg	1	11/20/15 17:18	DD	SW8270D	
Acenaphthene	ND	0.28	mg/Kg	1	11/20/15 17:18	DD	SW8270D	
Acenaphthylene	ND	0.28	mg/Kg	1	11/20/15 17:18	DD	SW8270D	
Acetophenone	ND	0.28	mg/Kg	1	11/20/15 17:18	DD	SW8270D	
Aniline	ND	1.1	mg/Kg	1	11/20/15 17:18	DD	SW8270D	
Anthracene	ND	0.28	mg/Kg	1	11/20/15 17:18	DD	SW8270D	
Benz(a)anthracene	ND	0.28	mg/Kg	1	11/20/15 17:18	DD	SW8270D	
Benzidine	ND	0.47	mg/Kg	1	11/20/15 17:18	DD	SW8270D	
Benzo(a)pyrene	ND	0.28	mg/Kg	1	11/20/15 17:18	DD	SW8270D	
Benzo(b)fluoranthene	ND	0.28	mg/Kg	1	11/20/15 17:18	DD	SW8270D	
Benzo(ghi)perylene	ND	0.28	mg/Kg	1	11/20/15 17:18	DD	SW8270D	
Benzo(k)fluoranthene	ND	0.28	mg/Kg	1	11/20/15 17:18	DD	SW8270D	
Benzoic acid	ND	1.1	mg/Kg	1	11/20/15 17:18	DD	SW8270D	1
Benzyl butyl phthalate	ND	0.28	mg/Kg	1	11/20/15 17:18	DD	SW8270D	
Bis(2-chloroethoxy)methane	ND	0.28	mg/Kg	1	11/20/15 17:18	DD	SW8270D	
Bis(2-chloroethyl)ether	ND	0.39	mg/Kg	1	11/20/15 17:18	DD	SW8270D	
Bis(2-chloroisopropyl)ether	ND	0.28	mg/Kg	1	11/20/15 17:18	DD	SW8270D	
Bis(2-ethylhexyl)phthalate	ND	0.28	mg/Kg	1	11/20/15 17:18	DD	SW8270D	
Carbazole	ND	0.59	mg/Kg	1	11/20/15 17:18	DD	SW8270D	
Chrysene	ND	0.28	mg/Kg	1	11/20/15 17:18	DD	SW8270D	
Dibenz(a,h)anthracene	ND	0.28	mg/Kg	1	11/20/15 17:18	DD	SW8270D	
Dibenzofuran	ND	0.28	mg/Kg	1	11/20/15 17:18	DD	SW8270D	
Diethyl phthalate	ND	0.28	mg/Kg	1	11/20/15 17:18	DD	SW8270D	
Dimethylphthalate	ND	0.28	mg/Kg	1	11/20/15 17:18	DD	SW8270D	
Di-n-butylphthalate	ND	0.28	mg/Kg	1	11/20/15 17:18	DD	SW8270D	
Di-n-octylphthalate	ND	0.28	mg/Kg	1	11/20/15 17:18	DD	SW8270D	
Fluoranthene	ND	0.28	mg/Kg	1	11/20/15 17:18	DD	SW8270D	
Fluorene	ND	0.28	mg/Kg	1	11/20/15 17:18	DD	SW8270D	
Hexachlorobenzene	ND	0.28	mg/Kg	1	11/20/15 17:18	DD	SW8270D	
Hexachlorobutadiene	ND	0.28	mg/Kg	1	11/20/15 17:18	DD	SW8270D	
Hexachlorocyclopentadiene	ND	0.28	mg/Kg	1	11/20/15 17:18	DD	SW8270D	
Hexachloroethane	ND	0.28	mg/Kg	1	11/20/15 17:18	DD	SW8270D	
Indeno(1,2,3-cd)pyrene	ND	0.28	mg/Kg	1	11/20/15 17:18	DD	SW8270D	
Isophorone	ND	0.28	mg/Kg	1	11/20/15 17:18	DD	SW8270D	
Naphthalene	ND	0.28	mg/Kg	1	11/20/15 17:18	DD	SW8270D	
Nitrobenzene	ND	0.28	mg/Kg	1	11/20/15 17:18	DD	SW8270D	
N-Nitrosodimethylamine	ND	0.39	mg/Kg	1	11/20/15 17:18	DD	SW8270D	
N-Nitrosodi-n-propylamine	ND	0.28	mg/Kg	1	11/20/15 17:18	DD	SW8270D	
N-Nitrosodiphenylamine	ND	0.39	mg/Kg	1	11/20/15 17:18	DD	SW8270D	
Pentachloronitrobenzene	ND	0.39	mg/Kg	1	11/20/15 17:18	DD	SW8270D	
Pentachlorophenol	ND	0.39	mg/Kg	1	11/20/15 17:18	DD	SW8270D	
Phenanthrene	ND	0.28	mg/Kg	1	11/20/15 17:18	DD	SW8270D	
Phenol	ND	0.28	mg/Kg	1	11/20/15 17:18	DD	SW8270D	
Pyrene	ND	0.28	mg/Kg	1	11/20/15 17:18	DD	SW8270D	
Pyridine	ND	0.39	mg/Kg	1	11/20/15 17:18	DD	SW8270D	
QA/QC Surrogates								
% 2,4,6-Tribromophenol	97		%	1	11/20/15 17:18	DD	30 - 130 %	

Project ID: 526 UNION AVE.
Client ID: SB3 7-8

Phoenix I.D.: BK26198

Parameter	Result	RL/ PQL	Units	Dilution	Date/Time	By	Reference
% 2-Fluorobiphenyl	75		%	1	11/20/15 17:18	DD	30 - 130 %
% 2-Fluorophenol	55		%	1	11/20/15 17:18	DD	30 - 130 %
% Nitrobenzene-d5	68		%	1	11/20/15 17:18	DD	30 - 130 %
% Phenol-d5	64		%	1	11/20/15 17:18	DD	30 - 130 %
% Terphenyl-d14	72		%	1	11/20/15 17:18	DD	30 - 130 %

1 = This parameter is not certified by NY NELAC for this matrix. NY NELAC does not offer certification for all parameters at this time.
B = Present in blank, no bias suspected.

RL/PQL=Reporting/Practical Quantitation Level (Equivalent to NELAC LOQ, Limit of Quanitation) ND=Not Detected BRL=Below Reporting Level
QA/QC Surrogates: Surrogates are compounds (preceeded with a %) added by the lab to determine analysis efficiency. Surrogate results(%) listed in the report are not "detected" compounds.

Comments:

Per 1.4.6 of EPA method 8270D, 1,2-Diphenylhydrazine is unstable and readily converts to Azobenzene. Azobenzene is used for the calibration of 1,2-Diphenylhydrazine.

Please be advised that the NY 375 soil criteria for chromium are based on hexavalent chromium and trivalent chromium.

All soils, solids and sludges are reported on a dry weight basis unless otherwise noted in the sample comments.

If there are any questions regarding this data, please call Phoenix Client Services at extension 200.
This report must not be reproduced except in full as defined by the attached chain of custody.

Phyllis Shiller, Laboratory Director
November 25, 2015
Reviewed and Released by: Bobbi Aloisa, Vice President

PHOENIX

Environmental Laboratories, Inc.
587 East Middle Turnpike, P.O.Box 370, Manchester, CT 06045
Tel. (860) 645-1102 Fax (860) 645-0823

ACCREDITED IN ACCORDANCE WITH nelac NY # 11301

Analysis Report

November 25, 2015

FOR: Attn:
Creative Environmental Solutions
39 West 37th Street, 14th Floor
New York, NY 10018

Sample Information		Custody Information		Date	Time
Matrix:	SOIL	Collected by:		11/18/15	12:16
Location Code:	CREATENV	Received by:	LB	11/19/15	17:04
Rush Request:	72 Hour	Analyzed by:	see "By" below		
P.O.#:					

Laboratory Data

SDG ID: GBK26195
Phoenix ID: BK26199

Project ID: 526 UNION AVE.
Client ID: SB2 0-2

Parameter	Result	RL/ PQL	Units	Dilution	Date/Time	By	Reference	
Silver	< 0.36	0.36	mg/Kg	1	11/20/15 11:44	LK	SW6010C	
Aluminum	10200	53	mg/Kg	10	11/20/15 08:36	LK	SW6010C	
Arsenic	7.5	0.7	mg/Kg	1	11/20/15 11:44	LK	SW6010C	
Barium	1810	3.6	mg/Kg	10	11/20/15 08:36	LK	SW6010C	
Beryllium	0.51	0.28	mg/Kg	1	11/20/15 11:44	LK	SW6010C	
Calcium	11000	53	mg/Kg	10	11/20/15 08:36	LK	SW6010C	
Cadmium	2.60	0.36	mg/Kg	1	11/20/15 11:44	LK	SW6010C	
Cobalt	12.4	0.36	mg/Kg	1	11/20/15 11:44	LK	SW6010C	
Chromium	28.1	0.36	mg/Kg	1	11/20/15 11:44	LK	SW6010C	
Copper	131	3.6	mg/kg	10	11/20/15 08:36	LK	SW6010C	
Iron	36700	53	mg/Kg	10	11/20/15 08:36	LK	SW6010C	B
Mercury	0.41	0.03	mg/Kg	1	11/23/15 09:54	RS	SW7471B	
Potassium	2490	5.3	mg/Kg	1	11/20/15 11:44	LK	SW6010C	
Magnesium	5090	5.3	mg/Kg	1	11/20/15 11:44	LK	SW6010C	
Manganese	390	3.6	mg/Kg	10	11/20/15 08:36	LK	SW6010C	
Sodium	3280	5.3	mg/Kg	1	11/20/15 11:44	LK	SW6010C	B
Nickel	23.1	0.36	mg/Kg	1	11/20/15 11:44	LK	SW6010C	
Lead	5540	36	mg/Kg	100	11/21/15 01:20	LK	SW6010C	
Antimony	35.4	3.6	mg/Kg	1	11/20/15 11:44	LK	SW6010C	
Selenium	< 1.4	1.4	mg/Kg	1	11/20/15 11:44	LK	SW6010C	
Thallium	< 3.2	3.2	mg/Kg	1	11/20/15 11:44	LK	SW6010C	
Vanadium	35.3	0.36	mg/Kg	1	11/20/15 11:44	LK	SW6010C	
Zinc	2940	36	mg/Kg	100	11/21/15 01:20	LK	SW6010C	
Percent Solid	88		%		11/20/15 01:40	W	SW846-%Solid	
Soil Extraction for PCB	Completed				11/19/15 00:00	BC	SW3545A	
Soil Extraction for Pesticide	Completed				11/19/15 00:00	BC/V	SW3545A	
Soil Extraction for SVOA	Completed				11/19/15 00:00	BB/CKV	SW3545A	
Mercury Digestion	Completed				11/21/15 00:00	W/W	SW7471B	

Parameter	Result	RL/ PQL	Units	Dilution	Date/Time	By	Reference
Total Metals Digest	Completed				11/19/15 00:00	G/AG	SW3050B
Field Extraction	Completed				11/18/15 12:16		SW5035A
Polychlorinated Biphenyls							
PCB-1016	ND	0.074	mg/Kg	2	11/20/15 22:01	AW	SW8082A
PCB-1221	ND	0.074	mg/Kg	2	11/20/15 22:01	AW	SW8082A
PCB-1232	ND	0.074	mg/Kg	2	11/20/15 22:01	AW	SW8082A
PCB-1242	ND	0.074	mg/Kg	2	11/20/15 22:01	AW	SW8082A
PCB-1248	*	0.074	mg/Kg	2	11/20/15 22:01	AW	SW8082A
PCB-1254	*	0.074	mg/Kg	2	11/20/15 22:01	AW	SW8082A
PCB-1260	*	0.074	mg/Kg	2	11/20/15 22:01	AW	SW8082A
PCB-1262	ND	0.074	mg/Kg	2	11/20/15 22:01	AW	SW8082A
PCB-1268	ND	0.074	mg/Kg	2	11/20/15 22:01	AW	SW8082A
Total PCBs	0.43	0.074	mg/Kg	2	11/20/15 22:01	AW	SW8082A
QA/QC Surrogates							
% DCBP	92		%	2	11/20/15 22:01	AW	30 - 150 %
% TCMX	104		%	2	11/20/15 22:01	AW	30 - 150 %
Pesticides - Soil							
4,4' -DDD	ND	0.01	mg/Kg	2	11/20/15 21:22	CE	SW8081B
4,4' -DDE	ND	0.0022	mg/Kg	2	11/20/15 21:22	CE	SW8081B
4,4' -DDT	ND	0.015	mg/Kg	2	11/20/15 21:22	CE	SW8081B
a-BHC	ND	0.0074	mg/Kg	2	11/20/15 21:22	CE	SW8081B
a-Chlordane	ND	0.0037	mg/Kg	2	11/20/15 21:22	CE	SW8081B
Aldrin	ND	0.0037	mg/Kg	2	11/20/15 21:22	CE	SW8081B
b-BHC	ND	0.0074	mg/Kg	2	11/20/15 21:22	CE	SW8081B
Chlordane	ND	0.037	mg/Kg	2	11/20/15 21:22	CE	SW8081B
d-BHC	ND	0.0074	mg/Kg	2	11/20/15 21:22	CE	SW8081B
Dieldrin	ND	0.0037	mg/Kg	2	11/20/15 21:22	CE	SW8081B
Endosulfan I	ND	0.0074	mg/Kg	2	11/20/15 21:22	CE	SW8081B
Endosulfan II	ND	0.0074	mg/Kg	2	11/20/15 21:22	CE	SW8081B
Endosulfan sulfate	ND	0.0074	mg/Kg	2	11/20/15 21:22	CE	SW8081B
Endrin	ND	0.0074	mg/Kg	2	11/20/15 21:22	CE	SW8081B
Endrin aldehyde	ND	0.0074	mg/Kg	2	11/20/15 21:22	CE	SW8081B
Endrin ketone	ND	0.0074	mg/Kg	2	11/20/15 21:22	CE	SW8081B
g-BHC	ND	0.003	mg/Kg	2	11/20/15 21:22	CE	SW8081B
g-Chlordane	ND	0.005	mg/Kg	2	11/20/15 21:22	CE	SW8081B
Heptachlor	ND	0.0074	mg/Kg	2	11/20/15 21:22	CE	SW8081B
Heptachlor epoxide	ND	0.0074	mg/Kg	2	11/20/15 21:22	CE	SW8081B
Methoxychlor	ND	0.037	mg/Kg	2	11/20/15 21:22	CE	SW8081B
Toxaphene	ND	0.15	mg/Kg	2	11/20/15 21:22	CE	SW8081B
QA/QC Surrogates							
% DCBP	77		%	2	11/20/15 21:22	CE	30 - 150 %
% TCMX	69		%	2	11/20/15 21:22	CE	30 - 150 %
Volatiles							
1,1,1,2-Tetrachloroethane	ND	0.0046	mg/Kg	1	11/21/15 04:26	JLI	SW8260C
1,1,1-Trichloroethane	ND	0.0046	mg/Kg	1	11/21/15 04:26	JLI	SW8260C
1,1,2,2-Tetrachloroethane	ND	0.0046	mg/Kg	1	11/21/15 04:26	JLI	SW8260C
1,1,2-Trichloroethane	ND	0.0046	mg/Kg	1	11/21/15 04:26	JLI	SW8260C

Project ID: 526 UNION AVE.
Client ID: SB2 0-2

Phoenix I.D.: BK26199

Parameter	Result	RL/ PQL	Units	Dilution	Date/Time	By	Reference	
1,1-Dichloroethane	ND	0.0046	mg/Kg	1	11/21/15 04:26	JLI	SW8260C	
1,1-Dichloroethene	ND	0.0046	mg/Kg	1	11/21/15 04:26	JLI	SW8260C	
1,1-Dichloropropene	ND	0.0046	mg/Kg	1	11/21/15 04:26	JLI	SW8260C	
1,2,3-Trichlorobenzene	ND	0.0046	mg/Kg	1	11/21/15 04:26	JLI	SW8260C	
1,2,3-Trichloropropane	ND	0.0046	mg/Kg	1	11/21/15 04:26	JLI	SW8260C	
1,2,4-Trichlorobenzene	ND	0.0046	mg/Kg	1	11/21/15 04:26	JLI	SW8260C	
1,2,4-Trimethylbenzene	ND	0.0046	mg/Kg	1	11/21/15 04:26	JLI	SW8260C	
1,2-Dibromo-3-chloropropane	ND	0.0046	mg/Kg	1	11/21/15 04:26	JLI	SW8260C	
1,2-Dibromoethane	ND	0.0046	mg/Kg	1	11/21/15 04:26	JLI	SW8260C	
1,2-Dichlorobenzene	ND	0.0046	mg/Kg	1	11/21/15 04:26	JLI	SW8260C	
1,2-Dichloroethane	ND	0.0046	mg/Kg	1	11/21/15 04:26	JLI	SW8260C	
1,2-Dichloropropane	ND	0.0046	mg/Kg	1	11/21/15 04:26	JLI	SW8260C	
1,3,5-Trimethylbenzene	ND	0.0046	mg/Kg	1	11/21/15 04:26	JLI	SW8260C	
1,3-Dichlorobenzene	ND	0.0046	mg/Kg	1	11/21/15 04:26	JLI	SW8260C	
1,3-Dichloropropane	ND	0.0046	mg/Kg	1	11/21/15 04:26	JLI	SW8260C	
1,4-Dichlorobenzene	ND	0.0046	mg/Kg	1	11/21/15 04:26	JLI	SW8260C	
2,2-Dichloropropane	ND	0.0046	mg/Kg	1	11/21/15 04:26	JLI	SW8260C	
2-Chlorotoluene	ND	0.0046	mg/Kg	1	11/21/15 04:26	JLI	SW8260C	
2-Hexanone	ND	0.023	mg/Kg	1	11/21/15 04:26	JLI	SW8260C	
2-Isopropyltoluene	ND	0.0046	mg/Kg	1	11/21/15 04:26	JLI	SW8260C	1
4-Chlorotoluene	ND	0.0046	mg/Kg	1	11/21/15 04:26	JLI	SW8260C	
4-Methyl-2-pentanone	ND	0.023	mg/Kg	1	11/21/15 04:26	JLI	SW8260C	
Acetone	ND	0.023	mg/Kg	1	11/21/15 04:26	JLI	SW8260C	
Acrylonitrile	ND	0.0092	mg/Kg	1	11/21/15 04:26	JLI	SW8260C	
Benzene	ND	0.0046	mg/Kg	1	11/21/15 04:26	JLI	SW8260C	
Bromobenzene	ND	0.0046	mg/Kg	1	11/21/15 04:26	JLI	SW8260C	
Bromochloromethane	ND	0.0046	mg/Kg	1	11/21/15 04:26	JLI	SW8260C	
Bromodichloromethane	ND	0.0046	mg/Kg	1	11/21/15 04:26	JLI	SW8260C	
Bromoform	ND	0.0046	mg/Kg	1	11/21/15 04:26	JLI	SW8260C	
Bromomethane	ND	0.0046	mg/Kg	1	11/21/15 04:26	JLI	SW8260C	
Carbon Disulfide	ND	0.0046	mg/Kg	1	11/21/15 04:26	JLI	SW8260C	
Carbon tetrachloride	ND	0.0046	mg/Kg	1	11/21/15 04:26	JLI	SW8260C	
Chlorobenzene	ND	0.0046	mg/Kg	1	11/21/15 04:26	JLI	SW8260C	
Chloroethane	ND	0.0046	mg/Kg	1	11/21/15 04:26	JLI	SW8260C	
Chloroform	ND	0.0046	mg/Kg	1	11/21/15 04:26	JLI	SW8260C	
Chloromethane	ND	0.0046	mg/Kg	1	11/21/15 04:26	JLI	SW8260C	
cis-1,2-Dichloroethene	ND	0.0046	mg/Kg	1	11/21/15 04:26	JLI	SW8260C	
cis-1,3-Dichloropropene	ND	0.0046	mg/Kg	1	11/21/15 04:26	JLI	SW8260C	
Dibromochloromethane	ND	0.0046	mg/Kg	1	11/21/15 04:26	JLI	SW8260C	
Dibromomethane	ND	0.0046	mg/Kg	1	11/21/15 04:26	JLI	SW8260C	
Dichlorodifluoromethane	ND	0.0046	mg/Kg	1	11/21/15 04:26	JLI	SW8260C	
Ethylbenzene	ND	0.0046	mg/Kg	1	11/21/15 04:26	JLI	SW8260C	
Hexachlorobutadiene	ND	0.0046	mg/Kg	1	11/21/15 04:26	JLI	SW8260C	
Isopropylbenzene	ND	0.0046	mg/Kg	1	11/21/15 04:26	JLI	SW8260C	
m&p-Xylene	ND	0.0046	mg/Kg	1	11/21/15 04:26	JLI	SW8260C	
Methyl Ethyl Ketone	ND	0.023	mg/Kg	1	11/21/15 04:26	JLI	SW8260C	
Methyl t-butyl ether (MTBE)	ND	0.0092	mg/Kg	1	11/21/15 04:26	JLI	SW8260C	
Methylene chloride	ND	0.0092	mg/Kg	1	11/21/15 04:26	JLI	SW8260C	
Naphthalene	ND	0.0046	mg/Kg	1	11/21/15 04:26	JLI	SW8260C	

Parameter	Result	RL/ PQL	Units	Dilution	Date/Time	By	Reference	
n-Butylbenzene	ND	0.0046	mg/Kg	1	11/21/15 04:26	JLI	SW8260C	
n-Propylbenzene	ND	0.0046	mg/Kg	1	11/21/15 04:26	JLI	SW8260C	
o-Xylene	ND	0.0046	mg/Kg	1	11/21/15 04:26	JLI	SW8260C	
p-Isopropyltoluene	ND	0.0046	mg/Kg	1	11/21/15 04:26	JLI	SW8260C	
sec-Butylbenzene	ND	0.0046	mg/Kg	1	11/21/15 04:26	JLI	SW8260C	
Styrene	ND	0.0046	mg/Kg	1	11/21/15 04:26	JLI	SW8260C	
tert-Butylbenzene	ND	0.0046	mg/Kg	1	11/21/15 04:26	JLI	SW8260C	
Tetrachloroethene	ND	0.0046	mg/Kg	1	11/21/15 04:26	JLI	SW8260C	
Tetrahydrofuran (THF)	ND	0.0092	mg/Kg	1	11/21/15 04:26	JLI	SW8260C	1
Toluene	ND	0.0046	mg/Kg	1	11/21/15 04:26	JLI	SW8260C	
Total Xylenes	ND	0.0046	mg/Kg	1	11/21/15 04:26	JLI	SW8260C	
trans-1,2-Dichloroethene	ND	0.0046	mg/Kg	1	11/21/15 04:26	JLI	SW8260C	
trans-1,3-Dichloropropene	ND	0.0046	mg/Kg	1	11/21/15 04:26	JLI	SW8260C	
trans-1,4-dichloro-2-butene	ND	0.0092	mg/Kg	1	11/21/15 04:26	JLI	SW8260C	
Trichloroethene	ND	0.0046	mg/Kg	1	11/21/15 04:26	JLI	SW8260C	
Trichlorofluoromethane	ND	0.0046	mg/Kg	1	11/21/15 04:26	JLI	SW8260C	
Trichlorotrifluoroethane	ND	0.0046	mg/Kg	1	11/21/15 04:26	JLI	SW8260C	
Vinyl chloride	ND	0.0046	mg/Kg	1	11/21/15 04:26	JLI	SW8260C	
QA/QC Surrogates								
% 1,2-dichlorobenzene-d4	95		%	1	11/21/15 04:26	JLI	70 - 130 %	
% Bromofluorobenzene	99		%	1	11/21/15 04:26	JLI	70 - 130 %	
% Dibromofluoromethane	93		%	1	11/21/15 04:26	JLI	70 - 130 %	
% Toluene-d8	101		%	1	11/21/15 04:26	JLI	70 - 130 %	

Semivolatiles

1,2,4,5-Tetrachlorobenzene	ND	0.26	mg/Kg	1	11/20/15 17:41	DD	SW8270D
1,2,4-Trichlorobenzene	ND	0.26	mg/Kg	1	11/20/15 17:41	DD	SW8270D
1,2-Dichlorobenzene	ND	0.26	mg/Kg	1	11/20/15 17:41	DD	SW8270D
1,2-Diphenylhydrazine	ND	0.38	mg/Kg	1	11/20/15 17:41	DD	SW8270D
1,3-Dichlorobenzene	ND	0.26	mg/Kg	1	11/20/15 17:41	DD	SW8270D
1,4-Dichlorobenzene	ND	0.26	mg/Kg	1	11/20/15 17:41	DD	SW8270D
2,4,5-Trichlorophenol	ND	0.26	mg/Kg	1	11/20/15 17:41	DD	SW8270D
2,4,6-Trichlorophenol	ND	0.26	mg/Kg	1	11/20/15 17:41	DD	SW8270D
2,4-Dichlorophenol	ND	0.26	mg/Kg	1	11/20/15 17:41	DD	SW8270D
2,4-Dimethylphenol	ND	0.26	mg/Kg	1	11/20/15 17:41	DD	SW8270D
2,4-Dinitrophenol	ND	0.6	mg/Kg	1	11/20/15 17:41	DD	SW8270D
2,4-Dinitrotoluene	ND	0.26	mg/Kg	1	11/20/15 17:41	DD	SW8270D
2,6-Dinitrotoluene	ND	0.26	mg/Kg	1	11/20/15 17:41	DD	SW8270D
2-Chloronaphthalene	ND	0.26	mg/Kg	1	11/20/15 17:41	DD	SW8270D
2-Chlorophenol	ND	0.26	mg/Kg	1	11/20/15 17:41	DD	SW8270D
2-Methylnaphthalene	0.31	0.26	mg/Kg	1	11/20/15 17:41	DD	SW8270D
2-Methylphenol (o-cresol)	ND	0.26	mg/Kg	1	11/20/15 17:41	DD	SW8270D
2-Nitroaniline	ND	0.6	mg/Kg	1	11/20/15 17:41	DD	SW8270D
2-Nitrophenol	ND	0.26	mg/Kg	1	11/20/15 17:41	DD	SW8270D
3&4-Methylphenol (m&p-cresol)	ND	0.38	mg/Kg	1	11/20/15 17:41	DD	SW8270D
3,3'-Dichlorobenzidine	ND	0.26	mg/Kg	1	11/20/15 17:41	DD	SW8270D
3-Nitroaniline	ND	0.6	mg/Kg	1	11/20/15 17:41	DD	SW8270D
4,6-Dinitro-2-methylphenol	ND	1.1	mg/Kg	1	11/20/15 17:41	DD	SW8270D
4-Bromophenyl phenyl ether	ND	0.38	mg/Kg	1	11/20/15 17:41	DD	SW8270D
4-Chloro-3-methylphenol	ND	0.26	mg/Kg	1	11/20/15 17:41	DD	SW8270D

Project ID: 526 UNION AVE.
Client ID: SB2 0-2

Phoenix I.D.: BK26199

Parameter	Result	RL/ PQL	Units	Dilution	Date/Time	By	Reference	
4-Chloroaniline	ND	0.26	mg/Kg	1	11/20/15 17:41	DD	SW8270D	
4-Chlorophenyl phenyl ether	ND	0.26	mg/Kg	1	11/20/15 17:41	DD	SW8270D	
4-Nitroaniline	ND	0.6	mg/Kg	1	11/20/15 17:41	DD	SW8270D	
4-Nitrophenol	ND	1.1	mg/Kg	1	11/20/15 17:41	DD	SW8270D	
Acenaphthene	1.2	0.26	mg/Kg	1	11/20/15 17:41	DD	SW8270D	
Acenaphthylene	ND	0.26	mg/Kg	1	11/20/15 17:41	DD	SW8270D	
Acetophenone	ND	0.26	mg/Kg	1	11/20/15 17:41	DD	SW8270D	
Aniline	ND	1.1	mg/Kg	1	11/20/15 17:41	DD	SW8270D	
Anthracene	2.3	0.26	mg/Kg	1	11/20/15 17:41	DD	SW8270D	
Benz(a)anthracene	4.1	0.26	mg/Kg	1	11/20/15 17:41	DD	SW8270D	
Benzidine	ND	0.45	mg/Kg	1	11/20/15 17:41	DD	SW8270D	
Benzo(a)pyrene	3.6	0.26	mg/Kg	1	11/20/15 17:41	DD	SW8270D	
Benzo(b)fluoranthene	3.9	0.26	mg/Kg	1	11/20/15 17:41	DD	SW8270D	
Benzo(ghi)perylene	1.9	0.26	mg/Kg	1	11/20/15 17:41	DD	SW8270D	
Benzo(k)fluoranthene	2.6	0.26	mg/Kg	1	11/20/15 17:41	DD	SW8270D	
Benzoic acid	ND	1.1	mg/Kg	1	11/20/15 17:41	DD	SW8270D	1
Benzyl butyl phthalate	ND	0.26	mg/Kg	1	11/20/15 17:41	DD	SW8270D	
Bis(2-chloroethoxy)methane	ND	0.26	mg/Kg	1	11/20/15 17:41	DD	SW8270D	
Bis(2-chloroethyl)ether	ND	0.38	mg/Kg	1	11/20/15 17:41	DD	SW8270D	
Bis(2-chloroisopropyl)ether	ND	0.26	mg/Kg	1	11/20/15 17:41	DD	SW8270D	
Bis(2-ethylhexyl)phthalate	ND	0.26	mg/Kg	1	11/20/15 17:41	DD	SW8270D	
Carbazole	1	0.56	mg/Kg	1	11/20/15 17:41	DD	SW8270D	
Chrysene	4.4	0.26	mg/Kg	1	11/20/15 17:41	DD	SW8270D	
Dibenz(a,h)anthracene	0.45	0.26	mg/Kg	1	11/20/15 17:41	DD	SW8270D	
Dibenzofuran	0.9	0.26	mg/Kg	1	11/20/15 17:41	DD	SW8270D	
Diethyl phthalate	ND	0.26	mg/Kg	1	11/20/15 17:41	DD	SW8270D	
Dimethylphthalate	ND	0.26	mg/Kg	1	11/20/15 17:41	DD	SW8270D	
Di-n-butylphthalate	ND	0.26	mg/Kg	1	11/20/15 17:41	DD	SW8270D	
Di-n-octylphthalate	ND	0.26	mg/Kg	1	11/20/15 17:41	DD	SW8270D	
Fluoranthene	9.7	1.3	mg/Kg	5	11/23/15 20:33	DD	SW8270D	
Fluorene	0.98	0.26	mg/Kg	1	11/20/15 17:41	DD	SW8270D	
Hexachlorobenzene	ND	0.26	mg/Kg	1	11/20/15 17:41	DD	SW8270D	
Hexachlorobutadiene	ND	0.26	mg/Kg	1	11/20/15 17:41	DD	SW8270D	
Hexachlorocyclopentadiene	ND	0.26	mg/Kg	1	11/20/15 17:41	DD	SW8270D	
Hexachloroethane	ND	0.26	mg/Kg	1	11/20/15 17:41	DD	SW8270D	
Indeno(1,2,3-cd)pyrene	1.9	0.26	mg/Kg	1	11/20/15 17:41	DD	SW8270D	
Isophorone	ND	0.26	mg/Kg	1	11/20/15 17:41	DD	SW8270D	
Naphthalene	ND	0.26	mg/Kg	1	11/20/15 17:41	DD	SW8270D	
Nitrobenzene	ND	0.26	mg/Kg	1	11/20/15 17:41	DD	SW8270D	
N-Nitrosodimethylamine	ND	0.38	mg/Kg	1	11/20/15 17:41	DD	SW8270D	
N-Nitrosodi-n-propylamine	ND	0.26	mg/Kg	1	11/20/15 17:41	DD	SW8270D	
N-Nitrosodiphenylamine	ND	0.38	mg/Kg	1	11/20/15 17:41	DD	SW8270D	
Pentachloronitrobenzene	ND	0.38	mg/Kg	1	11/20/15 17:41	DD	SW8270D	
Pentachlorophenol	ND	0.38	mg/Kg	1	11/20/15 17:41	DD	SW8270D	
Phenanthrene	11	1.3	mg/Kg	5	11/23/15 20:33	DD	SW8270D	
Phenol	ND	0.26	mg/Kg	1	11/20/15 17:41	DD	SW8270D	
Pyrene	8.3	1.3	mg/Kg	5	11/23/15 20:33	DD	SW8270D	
Pyridine	ND	0.38	mg/Kg	1	11/20/15 17:41	DD	SW8270D	

QA/QC Surrogates

Project ID: 526 UNION AVE.
Client ID: SB2 0-2

Phoenix I.D.: BK26199

Parameter	Result	RL/ PQL	Units	Dilution	Date/Time	By	Reference
% 2,4,6-Tribromophenol	82		%	1	11/20/15 17:41	DD	30 - 130 %
% 2-Fluorobiphenyl	65		%	1	11/20/15 17:41	DD	30 - 130 %
% 2-Fluorophenol	42		%	1	11/20/15 17:41	DD	30 - 130 %
% Nitrobenzene-d5	59		%	1	11/20/15 17:41	DD	30 - 130 %
% Phenol-d5	52		%	1	11/20/15 17:41	DD	30 - 130 %
% Terphenyl-d14	59		%	1	11/20/15 17:41	DD	30 - 130 %

1 = This parameter is not certified by NY NELAC for this matrix. NY NELAC does not offer certification for all parameters at this time.
B = Present in blank, no bias suspected.

RL/PQL=Reporting/Practical Quantitation Level (Equivalent to NELAC LOQ, Limit of Quanitation) ND=Not Detected BRL=Below Reporting Level
QA/QC Surrogates: Surrogates are compounds (preceeded with a %) added by the lab to determine analysis efficiency. Surrogate results(%) listed in the report are not "detected" compounds.

Comments:

Per 1.4.6 of EPA method 8270D, 1,2-Diphenylhydrazine is unstable and readily converts to Azobenzene. Azobenzene is used for the calibration of 1,2-Diphenylhydrazine.

Please be advised that the NY 375 soil criteria for chromium are based on hexavalent chromium and trivalent chromium.

PCB Comment:
* For PCBs, as per section 11.9.3 of SW846 method 8082, when multiple Aroclor's of PCBs are present and the aroclor is no longer recognizable, quantitation may be performed by comparing the total area of the PCB pattern to that of the aroclor it mostly resembles. The PCB pattern did not resemble any of the standards, but most closely resembles a mixture of the Aroclors 1248 and 1254 and 1260.

Pesticide Comment:
Due to matrix interference caused by the presence of PCBs in the sample, an elevated RL was reported.

All soils, solids and sludges are reported on a dry weight basis unless otherwise noted in the sample comments.

If there are any questions regarding this data, please call Phoenix Client Services at extension 200.
This report must not be reproduced except in full as defined by the attached chain of custody.

Phyllis Shiller, Laboratory Director
November 25, 2015
Reviewed and Released by: Bobbi Aloisa, Vice President

PHOENIX

Environmental Laboratories, Inc.
587 East Middle Turnpike, P.O.Box 370, Manchester, CT 06045
Tel. (860) 645-1102 Fax (860) 645-0823

ACCREDITED IN ACCORDANCE WITH nelac NY # 11301

Analysis Report

November 25, 2015

FOR: Attn:
Creative Environmental Solutions
39 West 37th Street, 14th Floor
New York, NY 10018

Sample Information		Custody Information		Date	Time
Matrix:	SOIL	Collected by:		11/18/15	12:31
Location Code:	CREATENV	Received by:	LB	11/19/15	17:04
Rush Request:	72 Hour	Analyzed by:	see "By" below		
P.O.#:					

Laboratory Data

SDG ID: GBK26195
Phoenix ID: BK26200

Project ID: 526 UNION AVE.
Client ID: SB2 5-7

Parameter	Result	RL/ PQL	Units	Dilution	Date/Time	By	Reference	
Silver	< 0.34	0.34	mg/Kg	1	11/20/15 11:47	LK	SW6010C	
Aluminum	10300	51	mg/Kg	10	11/20/15 08:39	LK	SW6010C	
Arsenic	2.5	0.7	mg/Kg	1	11/20/15 11:47	LK	SW6010C	
Barium	70.6	0.34	mg/Kg	1	11/20/15 11:47	LK	SW6010C	
Beryllium	0.47	0.27	mg/Kg	1	11/20/15 11:47	LK	SW6010C	
Calcium	1170	5.1	mg/Kg	1	11/20/15 11:47	LK	SW6010C	
Cadmium	< 0.34	0.34	mg/Kg	1	11/20/15 11:47	LK	SW6010C	
Cobalt	7.56	0.34	mg/Kg	1	11/20/15 11:47	LK	SW6010C	
Chromium	24.6	0.34	mg/Kg	1	11/20/15 11:47	LK	SW6010C	
Copper	60.0	0.34	mg/kg	1	11/20/15 11:47	LK	SW6010C	
Iron	27900	51	mg/Kg	10	11/20/15 08:39	LK	SW6010C	B
Mercury	12.8	0.28	mg/Kg	1	11/23/15 10:00	RS	SW7471B	
Potassium	1100	5.1	mg/Kg	1	11/20/15 11:47	LK	SW6010C	
Magnesium	1910	5.1	mg/Kg	1	11/20/15 11:47	LK	SW6010C	
Manganese	410	3.4	mg/Kg	10	11/20/15 08:39	LK	SW6010C	
Sodium	76.9	5.1	mg/Kg	1	11/20/15 11:47	LK	SW6010C	B
Nickel	12.6	0.34	mg/Kg	1	11/20/15 11:47	LK	SW6010C	
Lead	120	0.34	mg/Kg	1	11/20/15 11:47	LK	SW6010C	
Antimony	< 3.4	3.4	mg/Kg	1	11/20/15 11:47	LK	SW6010C	
Selenium	< 1.4	1.4	mg/Kg	1	11/20/15 11:47	LK	SW6010C	
Thallium	< 3.1	3.1	mg/Kg	1	11/20/15 11:47	LK	SW6010C	
Vanadium	39.8	0.34	mg/Kg	1	11/20/15 11:47	LK	SW6010C	
Zinc	90.6	0.34	mg/Kg	1	11/20/15 11:47	LK	SW6010C	
Percent Solid	86		%		11/20/15 01:40	W	SW846-%Solid	
Soil Extraction for PCB	Completed				11/19/15 00:00	BC	SW3545A	
Soil Extraction for Pesticide	Completed				11/19/15 00:00	BC/V	SW3545A	
Soil Extraction for SVOA	Completed				11/19/15 00:00	BB/CKV	SW3545A	
Mercury Digestion	Completed				11/21/15 00:00	W/W	SW7471B	

Project ID: 526 UNION AVE.
Client ID: SB2 5-7

Phoenix I.D.: BK26200

Parameter	Result	RL/ PQL	Units	Dilution	Date/Time	By	Reference
Total Metals Digest	Completed				11/19/15 00:00	G/AG	SW3050B
Field Extraction	Completed				11/18/15 12:31		SW5035A
Polychlorinated Biphenyls							
PCB-1016	ND	0.076	mg/Kg	2	11/20/15 19:36	AW	SW8082A
PCB-1221	ND	0.076	mg/Kg	2	11/20/15 19:36	AW	SW8082A
PCB-1232	ND	0.076	mg/Kg	2	11/20/15 19:36	AW	SW8082A
PCB-1242	ND	0.076	mg/Kg	2	11/20/15 19:36	AW	SW8082A
PCB-1248	ND	0.076	mg/Kg	2	11/20/15 19:36	AW	SW8082A
PCB-1254	ND	0.076	mg/Kg	2	11/20/15 19:36	AW	SW8082A
PCB-1260	ND	0.076	mg/Kg	2	11/20/15 19:36	AW	SW8082A
PCB-1262	ND	0.076	mg/Kg	2	11/20/15 19:36	AW	SW8082A
PCB-1268	ND	0.076	mg/Kg	2	11/20/15 19:36	AW	SW8082A
QA/QC Surrogates							
% DCBP	84		%	2	11/20/15 19:36	AW	30 - 150 %
% TCMX	79		%	2	11/20/15 19:36	AW	30 - 150 %
Pesticides - Soil							
4,4' -DDD	ND	0.0023	mg/Kg	2	11/20/15 17:38	CE	SW8081B
4,4' -DDE	ND	0.0023	mg/Kg	2	11/20/15 17:38	CE	SW8081B
4,4' -DDT	ND	0.0023	mg/Kg	2	11/20/15 17:38	CE	SW8081B
a-BHC	ND	0.0076	mg/Kg	2	11/20/15 17:38	CE	SW8081B
a-Chlordane	ND	0.0038	mg/Kg	2	11/20/15 17:38	CE	SW8081B
Aldrin	ND	0.0038	mg/Kg	2	11/20/15 17:38	CE	SW8081B
b-BHC	ND	0.0076	mg/Kg	2	11/20/15 17:38	CE	SW8081B
Chlordane	ND	0.038	mg/Kg	2	11/20/15 17:38	CE	SW8081B
d-BHC	ND	0.0076	mg/Kg	2	11/20/15 17:38	CE	SW8081B
Dieldrin	ND	0.0038	mg/Kg	2	11/20/15 17:38	CE	SW8081B
Endosulfan I	ND	0.0076	mg/Kg	2	11/20/15 17:38	CE	SW8081B
Endosulfan II	ND	0.0076	mg/Kg	2	11/20/15 17:38	CE	SW8081B
Endosulfan sulfate	ND	0.0076	mg/Kg	2	11/20/15 17:38	CE	SW8081B
Endrin	ND	0.0076	mg/Kg	2	11/20/15 17:38	CE	SW8081B
Endrin aldehyde	ND	0.0076	mg/Kg	2	11/20/15 17:38	CE	SW8081B
Endrin ketone	ND	0.0076	mg/Kg	2	11/20/15 17:38	CE	SW8081B
g-BHC	ND	0.0015	mg/Kg	2	11/20/15 17:38	CE	SW8081B
g-Chlordane	ND	0.0038	mg/Kg	2	11/20/15 17:38	CE	SW8081B
Heptachlor	ND	0.0076	mg/Kg	2	11/20/15 17:38	CE	SW8081B
Heptachlor epoxide	ND	0.0076	mg/Kg	2	11/20/15 17:38	CE	SW8081B
Methoxychlor	ND	0.038	mg/Kg	2	11/20/15 17:38	CE	SW8081B
Toxaphene	ND	0.15	mg/Kg	2	11/20/15 17:38	CE	SW8081B
QA/QC Surrogates							
% DCBP	80		%	2	11/20/15 17:38	CE	30 - 150 %
% TCMX	73		%	2	11/20/15 17:38	CE	30 - 150 %
Volatiles							
1,1,1,2-Tetrachloroethane	ND	0.0078	mg/Kg	1	11/21/15 04:48	JLI	SW8260C
1,1,1-Trichloroethane	ND	0.0078	mg/Kg	1	11/21/15 04:48	JLI	SW8260C
1,1,2,2-Tetrachloroethane	ND	0.0078	mg/Kg	1	11/21/15 04:48	JLI	SW8260C
1,1,2-Trichloroethane	ND	0.0078	mg/Kg	1	11/21/15 04:48	JLI	SW8260C
1,1-Dichloroethane	ND	0.0078	mg/Kg	1	11/21/15 04:48	JLI	SW8260C

Project ID: 526 UNION AVE.
Client ID: SB2 5-7

Phoenix I.D.: BK26200

Parameter	Result	RL/ PQL	Units	Dilution	Date/Time	By	Reference	
1,1-Dichloroethene	ND	0.0078	mg/Kg	1	11/21/15 04:48	JLI	SW8260C	
1,1-Dichloropropene	ND	0.0078	mg/Kg	1	11/21/15 04:48	JLI	SW8260C	
1,2,3-Trichlorobenzene	ND	0.0078	mg/Kg	1	11/21/15 04:48	JLI	SW8260C	
1,2,3-Trichloropropane	ND	0.0078	mg/Kg	1	11/21/15 04:48	JLI	SW8260C	
1,2,4-Trichlorobenzene	ND	0.0078	mg/Kg	1	11/21/15 04:48	JLI	SW8260C	
1,2,4-Trimethylbenzene	ND	0.0078	mg/Kg	1	11/21/15 04:48	JLI	SW8260C	
1,2-Dibromo-3-chloropropane	ND	0.0078	mg/Kg	1	11/21/15 04:48	JLI	SW8260C	
1,2-Dibromoethane	ND	0.0078	mg/Kg	1	11/21/15 04:48	JLI	SW8260C	
1,2-Dichlorobenzene	ND	0.0078	mg/Kg	1	11/21/15 04:48	JLI	SW8260C	
1,2-Dichloroethane	ND	0.0078	mg/Kg	1	11/21/15 04:48	JLI	SW8260C	
1,2-Dichloropropane	ND	0.0078	mg/Kg	1	11/21/15 04:48	JLI	SW8260C	
1,3,5-Trimethylbenzene	ND	0.0078	mg/Kg	1	11/21/15 04:48	JLI	SW8260C	
1,3-Dichlorobenzene	ND	0.0078	mg/Kg	1	11/21/15 04:48	JLI	SW8260C	
1,3-Dichloropropane	ND	0.0078	mg/Kg	1	11/21/15 04:48	JLI	SW8260C	
1,4-Dichlorobenzene	ND	0.0078	mg/Kg	1	11/21/15 04:48	JLI	SW8260C	
2,2-Dichloropropane	ND	0.0078	mg/Kg	1	11/21/15 04:48	JLI	SW8260C	
2-Chlorotoluene	ND	0.0078	mg/Kg	1	11/21/15 04:48	JLI	SW8260C	
2-Hexanone	ND	0.039	mg/Kg	1	11/21/15 04:48	JLI	SW8260C	
2-Isopropyltoluene	ND	0.0078	mg/Kg	1	11/21/15 04:48	JLI	SW8260C	1
4-Chlorotoluene	ND	0.0078	mg/Kg	1	11/21/15 04:48	JLI	SW8260C	
4-Methyl-2-pentanone	ND	0.039	mg/Kg	1	11/21/15 04:48	JLI	SW8260C	
Acetone	ND	0.039	mg/Kg	1	11/21/15 04:48	JLI	SW8260C	
Acrylonitrile	ND	0.016	mg/Kg	1	11/21/15 04:48	JLI	SW8260C	
Benzene	ND	0.0078	mg/Kg	1	11/21/15 04:48	JLI	SW8260C	
Bromobenzene	ND	0.0078	mg/Kg	1	11/21/15 04:48	JLI	SW8260C	
Bromochloromethane	ND	0.0078	mg/Kg	1	11/21/15 04:48	JLI	SW8260C	
Bromodichloromethane	ND	0.0078	mg/Kg	1	11/21/15 04:48	JLI	SW8260C	
Bromoform	ND	0.0078	mg/Kg	1	11/21/15 04:48	JLI	SW8260C	
Bromomethane	ND	0.0078	mg/Kg	1	11/21/15 04:48	JLI	SW8260C	
Carbon Disulfide	ND	0.0078	mg/Kg	1	11/21/15 04:48	JLI	SW8260C	
Carbon tetrachloride	ND	0.0078	mg/Kg	1	11/21/15 04:48	JLI	SW8260C	
Chlorobenzene	ND	0.0078	mg/Kg	1	11/21/15 04:48	JLI	SW8260C	
Chloroethane	ND	0.0078	mg/Kg	1	11/21/15 04:48	JLI	SW8260C	
Chloroform	ND	0.0078	mg/Kg	1	11/21/15 04:48	JLI	SW8260C	
Chloromethane	ND	0.0078	mg/Kg	1	11/21/15 04:48	JLI	SW8260C	
cis-1,2-Dichloroethene	ND	0.0078	mg/Kg	1	11/21/15 04:48	JLI	SW8260C	
cis-1,3-Dichloropropene	ND	0.0078	mg/Kg	1	11/21/15 04:48	JLI	SW8260C	
Dibromochloromethane	ND	0.0078	mg/Kg	1	11/21/15 04:48	JLI	SW8260C	
Dibromomethane	ND	0.0078	mg/Kg	1	11/21/15 04:48	JLI	SW8260C	
Dichlorodifluoromethane	ND	0.0078	mg/Kg	1	11/21/15 04:48	JLI	SW8260C	
Ethylbenzene	ND	0.0078	mg/Kg	1	11/21/15 04:48	JLI	SW8260C	
Hexachlorobutadiene	ND	0.0078	mg/Kg	1	11/21/15 04:48	JLI	SW8260C	
Isopropylbenzene	ND	0.0078	mg/Kg	1	11/21/15 04:48	JLI	SW8260C	
m&p-Xylene	ND	0.0078	mg/Kg	1	11/21/15 04:48	JLI	SW8260C	
Methyl Ethyl Ketone	ND	0.039	mg/Kg	1	11/21/15 04:48	JLI	SW8260C	
Methyl t-butyl ether (MTBE)	ND	0.016	mg/Kg	1	11/21/15 04:48	JLI	SW8260C	
Methylene chloride	ND	0.016	mg/Kg	1	11/21/15 04:48	JLI	SW8260C	
Naphthalene	ND	0.0078	mg/Kg	1	11/21/15 04:48	JLI	SW8260C	
n-Butylbenzene	ND	0.0078	mg/Kg	1	11/21/15 04:48	JLI	SW8260C	

Parameter	Result	RL/ PQL	Units	Dilution	Date/Time	By	Reference	
n-Propylbenzene	ND	0.0078	mg/Kg	1	11/21/15 04:48	JLI	SW8260C	
o-Xylene	ND	0.0078	mg/Kg	1	11/21/15 04:48	JLI	SW8260C	
p-Isopropyltoluene	ND	0.0078	mg/Kg	1	11/21/15 04:48	JLI	SW8260C	
sec-Butylbenzene	ND	0.0078	mg/Kg	1	11/21/15 04:48	JLI	SW8260C	
Styrene	ND	0.0078	mg/Kg	1	11/21/15 04:48	JLI	SW8260C	
tert-Butylbenzene	ND	0.0078	mg/Kg	1	11/21/15 04:48	JLI	SW8260C	
Tetrachloroethene	ND	0.0078	mg/Kg	1	11/21/15 04:48	JLI	SW8260C	
Tetrahydrofuran (THF)	ND	0.016	mg/Kg	1	11/21/15 04:48	JLI	SW8260C	1
Toluene	ND	0.0078	mg/Kg	1	11/21/15 04:48	JLI	SW8260C	
Total Xylenes	ND	0.0078	mg/Kg	1	11/21/15 04:48	JLI	SW8260C	
trans-1,2-Dichloroethene	ND	0.0078	mg/Kg	1	11/21/15 04:48	JLI	SW8260C	
trans-1,3-Dichloropropene	ND	0.0078	mg/Kg	1	11/21/15 04:48	JLI	SW8260C	
trans-1,4-dichloro-2-butene	ND	0.016	mg/Kg	1	11/21/15 04:48	JLI	SW8260C	
Trichloroethene	ND	0.0078	mg/Kg	1	11/21/15 04:48	JLI	SW8260C	
Trichlorofluoromethane	ND	0.0078	mg/Kg	1	11/21/15 04:48	JLI	SW8260C	
Trichlorotrifluoroethane	ND	0.0078	mg/Kg	1	11/21/15 04:48	JLI	SW8260C	
Vinyl chloride	ND	0.0078	mg/Kg	1	11/21/15 04:48	JLI	SW8260C	
QA/QC Surrogates								
% 1,2-dichlorobenzene-d4	108		%	1	11/21/15 04:48	JLI	70 - 130 %	
% Bromofluorobenzene	85		%	1	11/21/15 04:48	JLI	70 - 130 %	
% Dibromofluoromethane	99		%	1	11/21/15 04:48	JLI	70 - 130 %	
% Toluene-d8	100		%	1	11/21/15 04:48	JLI	70 - 130 %	

Semivolatiles

1,2,4,5-Tetrachlorobenzene	ND	0.27	mg/Kg	1	11/20/15 01:11	DD	SW8270D
1,2,4-Trichlorobenzene	ND	0.27	mg/Kg	1	11/20/15 01:11	DD	SW8270D
1,2-Dichlorobenzene	ND	0.27	mg/Kg	1	11/20/15 01:11	DD	SW8270D
1,2-Diphenylhydrazine	ND	0.38	mg/Kg	1	11/20/15 01:11	DD	SW8270D
1,3-Dichlorobenzene	ND	0.27	mg/Kg	1	11/20/15 01:11	DD	SW8270D
1,4-Dichlorobenzene	ND	0.27	mg/Kg	1	11/20/15 01:11	DD	SW8270D
2,4,5-Trichlorophenol	ND	0.27	mg/Kg	1	11/20/15 01:11	DD	SW8270D
2,4,6-Trichlorophenol	ND	0.27	mg/Kg	1	11/20/15 01:11	DD	SW8270D
2,4-Dichlorophenol	ND	0.27	mg/Kg	1	11/20/15 01:11	DD	SW8270D
2,4-Dimethylphenol	ND	0.27	mg/Kg	1	11/20/15 01:11	DD	SW8270D
2,4-Dinitrophenol	ND	0.61	mg/Kg	1	11/20/15 01:11	DD	SW8270D
2,4-Dinitrotoluene	ND	0.27	mg/Kg	1	11/20/15 01:11	DD	SW8270D
2,6-Dinitrotoluene	ND	0.27	mg/Kg	1	11/20/15 01:11	DD	SW8270D
2-Chloronaphthalene	ND	0.27	mg/Kg	1	11/20/15 01:11	DD	SW8270D
2-Chlorophenol	ND	0.27	mg/Kg	1	11/20/15 01:11	DD	SW8270D
2-Methylnaphthalene	ND	0.27	mg/Kg	1	11/20/15 01:11	DD	SW8270D
2-Methylphenol (o-cresol)	ND	0.27	mg/Kg	1	11/20/15 01:11	DD	SW8270D
2-Nitroaniline	ND	0.61	mg/Kg	1	11/20/15 01:11	DD	SW8270D
2-Nitrophenol	ND	0.27	mg/Kg	1	11/20/15 01:11	DD	SW8270D
3&4-Methylphenol (m&p-cresol)	ND	0.38	mg/Kg	1	11/20/15 01:11	DD	SW8270D
3,3'-Dichlorobenzidine	ND	0.27	mg/Kg	1	11/20/15 01:11	DD	SW8270D
3-Nitroaniline	ND	0.61	mg/Kg	1	11/20/15 01:11	DD	SW8270D
4,6-Dinitro-2-methylphenol	ND	1.1	mg/Kg	1	11/20/15 01:11	DD	SW8270D
4-Bromophenyl phenyl ether	ND	0.38	mg/Kg	1	11/20/15 01:11	DD	SW8270D
4-Chloro-3-methylphenol	ND	0.27	mg/Kg	1	11/20/15 01:11	DD	SW8270D
4-Chloroaniline	ND	0.27	mg/Kg	1	11/20/15 01:11	DD	SW8270D

Project ID: 526 UNION AVE.
Client ID: SB2 5-7

Phoenix I.D.: BK26200

Parameter	Result	RL/ PQL	Units	Dilution	Date/Time	By	Reference	
4-Chlorophenyl phenyl ether	ND	0.27	mg/Kg	1	11/20/15 01:11	DD	SW8270D	
4-Nitroaniline	ND	0.61	mg/Kg	1	11/20/15 01:11	DD	SW8270D	
4-Nitrophenol	ND	1.1	mg/Kg	1	11/20/15 01:11	DD	SW8270D	
Acenaphthene	ND	0.27	mg/Kg	1	11/20/15 01:11	DD	SW8270D	
Acenaphthylene	ND	0.27	mg/Kg	1	11/20/15 01:11	DD	SW8270D	
Acetophenone	ND	0.27	mg/Kg	1	11/20/15 01:11	DD	SW8270D	
Aniline	ND	1.1	mg/Kg	1	11/20/15 01:11	DD	SW8270D	
Anthracene	ND	0.27	mg/Kg	1	11/20/15 01:11	DD	SW8270D	
Benz(a)anthracene	ND	0.27	mg/Kg	1	11/20/15 01:11	DD	SW8270D	
Benzidine	ND	0.46	mg/Kg	1	11/20/15 01:11	DD	SW8270D	
Benzo(a)pyrene	ND	0.27	mg/Kg	1	11/20/15 01:11	DD	SW8270D	
Benzo(b)fluoranthene	ND	0.27	mg/Kg	1	11/20/15 01:11	DD	SW8270D	
Benzo(ghi)perylene	ND	0.27	mg/Kg	1	11/20/15 01:11	DD	SW8270D	
Benzo(k)fluoranthene	ND	0.27	mg/Kg	1	11/20/15 01:11	DD	SW8270D	
Benzoic acid	ND	1.1	mg/Kg	1	11/20/15 01:11	DD	SW8270D	1
Benzyl butyl phthalate	ND	0.27	mg/Kg	1	11/20/15 01:11	DD	SW8270D	
Bis(2-chloroethoxy)methane	ND	0.27	mg/Kg	1	11/20/15 01:11	DD	SW8270D	
Bis(2-chloroethyl)ether	ND	0.38	mg/Kg	1	11/20/15 01:11	DD	SW8270D	
Bis(2-chloroisopropyl)ether	ND	0.27	mg/Kg	1	11/20/15 01:11	DD	SW8270D	
Bis(2-ethylhexyl)phthalate	ND	0.27	mg/Kg	1	11/20/15 01:11	DD	SW8270D	
Carbazole	ND	0.57	mg/Kg	1	11/20/15 01:11	DD	SW8270D	
Chrysene	ND	0.27	mg/Kg	1	11/20/15 01:11	DD	SW8270D	
Dibenz(a,h)anthracene	ND	0.27	mg/Kg	1	11/20/15 01:11	DD	SW8270D	
Dibenzofuran	ND	0.27	mg/Kg	1	11/20/15 01:11	DD	SW8270D	
Diethyl phthalate	ND	0.27	mg/Kg	1	11/20/15 01:11	DD	SW8270D	
Dimethylphthalate	ND	0.27	mg/Kg	1	11/20/15 01:11	DD	SW8270D	
Di-n-butylphthalate	ND	0.27	mg/Kg	1	11/20/15 01:11	DD	SW8270D	
Di-n-octylphthalate	ND	0.27	mg/Kg	1	11/20/15 01:11	DD	SW8270D	
Fluoranthene	ND	0.27	mg/Kg	1	11/20/15 01:11	DD	SW8270D	
Fluorene	ND	0.27	mg/Kg	1	11/20/15 01:11	DD	SW8270D	
Hexachlorobenzene	ND	0.27	mg/Kg	1	11/20/15 01:11	DD	SW8270D	
Hexachlorobutadiene	ND	0.27	mg/Kg	1	11/20/15 01:11	DD	SW8270D	
Hexachlorocyclopentadiene	ND	0.27	mg/Kg	1	11/20/15 01:11	DD	SW8270D	
Hexachloroethane	ND	0.27	mg/Kg	1	11/20/15 01:11	DD	SW8270D	
Indeno(1,2,3-cd)pyrene	ND	0.27	mg/Kg	1	11/20/15 01:11	DD	SW8270D	
Isophorone	ND	0.27	mg/Kg	1	11/20/15 01:11	DD	SW8270D	
Naphthalene	ND	0.27	mg/Kg	1	11/20/15 01:11	DD	SW8270D	
Nitrobenzene	ND	0.27	mg/Kg	1	11/20/15 01:11	DD	SW8270D	
N-Nitrosodimethylamine	ND	0.38	mg/Kg	1	11/20/15 01:11	DD	SW8270D	
N-Nitrosodi-n-propylamine	ND	0.27	mg/Kg	1	11/20/15 01:11	DD	SW8270D	
N-Nitrosodiphenylamine	ND	0.38	mg/Kg	1	11/20/15 01:11	DD	SW8270D	
Pentachloronitrobenzene	ND	0.38	mg/Kg	1	11/20/15 01:11	DD	SW8270D	
Pentachlorophenol	ND	0.38	mg/Kg	1	11/20/15 01:11	DD	SW8270D	
Phenanthrene	ND	0.27	mg/Kg	1	11/20/15 01:11	DD	SW8270D	
Phenol	ND	0.27	mg/Kg	1	11/20/15 01:11	DD	SW8270D	
Pyrene	ND	0.27	mg/Kg	1	11/20/15 01:11	DD	SW8270D	
Pyridine	ND	0.38	mg/Kg	1	11/20/15 01:11	DD	SW8270D	
QA/QC Surrogates								
% 2,4,6-Tribromophenol	74		%	1	11/20/15 01:11	DD	30 - 130 %	

Project ID: 526 UNION AVE.
Client ID: SB2 5-7

Phoenix I.D.: BK26200

Parameter	Result	RL/ PQL	Units	Dilution	Date/Time	By	Reference
% 2-Fluorobiphenyl	60		%	1	11/20/15 01:11	DD	30 - 130 %
% 2-Fluorophenol	50		%	1	11/20/15 01:11	DD	30 - 130 %
% Nitrobenzene-d5	58		%	1	11/20/15 01:11	DD	30 - 130 %
% Phenol-d5	60		%	1	11/20/15 01:11	DD	30 - 130 %
% Terphenyl-d14	74		%	1	11/20/15 01:11	DD	30 - 130 %

1 = This parameter is not certified by NY NELAC for this matrix. NY NELAC does not offer certification for all parameters at this time.
B = Present in blank, no bias suspected.

RL/PQL=Reporting/Practical Quantitation Level (Equivalent to NELAC LOQ, Limit of Quanitation) ND=Not Detected BRL=Below Reporting Level
QA/QC Surrogates: Surrogates are compounds (preceeded with a %) added by the lab to determine analysis efficiency. Surrogate results(%) listed in the report are not "detected" compounds.

Comments:

Per 1.4.6 of EPA method 8270D, 1,2-Diphenylhydrazine is unstable and readily converts to Azobenzene. Azobenzene is used for the calibration of 1,2-Diphenylhydrazine.

Please be advised that the NY 375 soil criteria for chromium are based on hexavalent chromium and trivalent chromium.

All soils, solids and sludges are reported on a dry weight basis unless otherwise noted in the sample comments.

If there are any questions regarding this data, please call Phoenix Client Services at extension 200.
This report must not be reproduced except in full as defined by the attached chain of custody.

Phyllis Shiller, Laboratory Director
November 25, 2015
Reviewed and Released by: Bobbi Aloisa, Vice President

PHOENIX

Environmental Laboratories, Inc.
587 East Middle Turnpike, P.O.Box 370, Manchester, CT 06045
Tel. (860) 645-1102 Fax (860) 645-0823

ACCREDITED IN ACCORDANCE WITH nelac NY # 11301

Analysis Report

November 25, 2015

FOR: Attn:
Creative Environmental Solutions
39 West 37th Street, 14th Floor
New York, NY 10018

Sample Information		Custody Information		Date	Time
Matrix:	SOIL	Collected by:		11/18/15	12:47
Location Code:	CREATENV	Received by:	LB	11/19/15	17:04
Rush Request:	72 Hour	Analyzed by:	see "By" below		
P.O.#:					

Laboratory Data

SDG ID: GBK26195
Phoenix ID: BK26201

Project ID: 526 UNION AVE.
Client ID: SB4 0-2

Parameter	Result	RL/ PQL	Units	Dilution	Date/Time	By	Reference	
Silver	< 0.33	0.33	mg/Kg	1	11/20/15 11:51	LK	SW6010C	
Aluminum	5000	50	mg/Kg	10	11/20/15 08:42	LK	SW6010C	
Arsenic	25.8	0.7	mg/Kg	1	11/20/15 11:51	LK	SW6010C	
Barium	121	0.33	mg/Kg	1	11/20/15 11:51	LK	SW6010C	
Beryllium	0.39	0.27	mg/Kg	1	11/20/15 11:51	LK	SW6010C	
Calcium	1550	5.0	mg/Kg	1	11/20/15 11:51	LK	SW6010C	
Cadmium	2.29	0.33	mg/Kg	1	11/20/15 11:51	LK	SW6010C	
Cobalt	13.0	0.33	mg/Kg	1	11/20/15 11:51	LK	SW6010C	
Chromium	45.5	0.33	mg/Kg	1	11/20/15 11:51	LK	SW6010C	
Copper	135	3.3	mg/kg	10	11/20/15 08:42	LK	SW6010C	
Iron	76300	50	mg/Kg	10	11/20/15 08:42	LK	SW6010C	B
Mercury	0.89	0.03	mg/Kg	1	11/23/15 10:08	RS	SW7471B	
Potassium	983	5.0	mg/Kg	1	11/20/15 11:51	LK	SW6010C	
Magnesium	1260	5.0	mg/Kg	1	11/20/15 11:51	LK	SW6010C	
Manganese	1020	3.3	mg/Kg	10	11/20/15 08:42	LK	SW6010C	
Sodium	122	5.0	mg/Kg	1	11/20/15 11:51	LK	SW6010C	B
Nickel	24.9	0.33	mg/Kg	1	11/20/15 11:51	LK	SW6010C	
Lead	340	3.3	mg/Kg	10	11/20/15 08:42	LK	SW6010C	
Antimony	< 3.3	3.3	mg/Kg	1	11/20/15 11:51	LK	SW6010C	
Selenium	< 1.3	1.3	mg/Kg	1	11/20/15 11:51	LK	SW6010C	
Thallium	< 3.0	3.0	mg/Kg	1	11/20/15 11:51	LK	SW6010C	
Vanadium	35.5	0.33	mg/Kg	1	11/20/15 11:51	LK	SW6010C	
Zinc	759	3.3	mg/Kg	10	11/20/15 08:42	LK	SW6010C	
Percent Solid	89		%		11/20/15 01:40	W	SW846-%Solid	
Soil Extraction for PCB	Completed				11/19/15 00:00	BC	SW3545A	
Soil Extraction for Pesticide	Completed				11/19/15 00:00	BC/V	SW3545A	
Soil Extraction for SVOA	Completed				11/19/15 00:00	BB/CKV	SW3545A	
Mercury Digestion	Completed				11/21/15 00:00	W/W	SW7471B	

Parameter	Result	RL/ PQL	Units	Dilution	Date/Time	By	Reference
Total Metals Digest	Completed				11/19/15 00:00	G/AG	SW3050B
Field Extraction	Completed				11/18/15 12:47		SW5035A
Polychlorinated Biphenyls							
PCB-1016	ND	0.074	mg/Kg	2	11/20/15 22:24	AW	SW8082A
PCB-1221	ND	0.074	mg/Kg	2	11/20/15 22:24	AW	SW8082A
PCB-1232	ND	0.074	mg/Kg	2	11/20/15 22:24	AW	SW8082A
PCB-1242	ND	0.074	mg/Kg	2	11/20/15 22:24	AW	SW8082A
PCB-1248	ND	0.074	mg/Kg	2	11/20/15 22:24	AW	SW8082A
PCB-1254	ND	0.074	mg/Kg	2	11/20/15 22:24	AW	SW8082A
PCB-1260	ND	0.074	mg/Kg	2	11/20/15 22:24	AW	SW8082A
PCB-1262	ND	0.074	mg/Kg	2	11/20/15 22:24	AW	SW8082A
PCB-1268	ND	0.074	mg/Kg	2	11/20/15 22:24	AW	SW8082A
QA/QC Surrogates							
% DCBP	97		%	2	11/20/15 22:24	AW	30 - 150 %
% TCMX	102		%	2	11/20/15 22:24	AW	30 - 150 %
Pesticides - Soil							
4,4' -DDD	ND	0.0022	mg/Kg	2	11/20/15 21:41	CE	SW8081B
4,4' -DDE	ND	0.0022	mg/Kg	2	11/20/15 21:41	CE	SW8081B
4,4' -DDT	ND	0.0022	mg/Kg	2	11/20/15 21:41	CE	SW8081B
a-BHC	ND	0.0074	mg/Kg	2	11/20/15 21:41	CE	SW8081B
a-Chlordane	ND	0.0037	mg/Kg	2	11/20/15 21:41	CE	SW8081B
Aldrin	ND	0.0037	mg/Kg	2	11/20/15 21:41	CE	SW8081B
b-BHC	ND	0.0074	mg/Kg	2	11/20/15 21:41	CE	SW8081B
Chlordane	ND	0.037	mg/Kg	2	11/20/15 21:41	CE	SW8081B
d-BHC	ND	0.0074	mg/Kg	2	11/20/15 21:41	CE	SW8081B
Dieldrin	ND	0.0037	mg/Kg	2	11/20/15 21:41	CE	SW8081B
Endosulfan I	ND	0.0074	mg/Kg	2	11/20/15 21:41	CE	SW8081B
Endosulfan II	ND	0.0074	mg/Kg	2	11/20/15 21:41	CE	SW8081B
Endosulfan sulfate	ND	0.0074	mg/Kg	2	11/20/15 21:41	CE	SW8081B
Endrin	ND	0.0074	mg/Kg	2	11/20/15 21:41	CE	SW8081B
Endrin aldehyde	ND	0.0074	mg/Kg	2	11/20/15 21:41	CE	SW8081B
Endrin ketone	ND	0.0074	mg/Kg	2	11/20/15 21:41	CE	SW8081B
g-BHC	ND	0.0015	mg/Kg	2	11/20/15 21:41	CE	SW8081B
g-Chlordane	ND	0.0037	mg/Kg	2	11/20/15 21:41	CE	SW8081B
Heptachlor	ND	0.0074	mg/Kg	2	11/20/15 21:41	CE	SW8081B
Heptachlor epoxide	ND	0.0074	mg/Kg	2	11/20/15 21:41	CE	SW8081B
Methoxychlor	ND	0.037	mg/Kg	2	11/20/15 21:41	CE	SW8081B
Toxaphene	ND	0.15	mg/Kg	2	11/20/15 21:41	CE	SW8081B
QA/QC Surrogates							
% DCBP	69		%	2	11/20/15 21:41	CE	30 - 150 %
% TCMX	89		%	2	11/20/15 21:41	CE	30 - 150 %
Volatiles							
1,1,1,2-Tetrachloroethane	ND	0.0063	mg/Kg	1	11/22/15 13:00	JLI	SW8260C
1,1,1-Trichloroethane	ND	0.0063	mg/Kg	1	11/22/15 13:00	JLI	SW8260C
1,1,2,2-Tetrachloroethane	ND	0.77	mg/Kg	50	11/21/15 15:49	JLI	SW8260C
1,1,2-Trichloroethane	ND	0.0063	mg/Kg	1	11/22/15 13:00	JLI	SW8260C
1,1-Dichloroethane	ND	0.0063	mg/Kg	1	11/22/15 13:00	JLI	SW8260C

Project ID: 526 UNION AVE.
Client ID: SB4 0-2

Phoenix I.D.: BK26201

Parameter	Result	RL/ PQL	Units	Dilution	Date/Time	By	Reference	
1,1-Dichloroethene	ND	0.0063	mg/Kg	1	11/22/15 13:00	JLI	SW8260C	
1,1-Dichloropropene	ND	0.0063	mg/Kg	1	11/22/15 13:00	JLI	SW8260C	
1,2,3-Trichlorobenzene	ND	0.77	mg/Kg	50	11/21/15 15:49	JLI	SW8260C	
1,2,3-Trichloropropane	ND	0.77	mg/Kg	50	11/21/15 15:49	JLI	SW8260C	
1,2,4-Trichlorobenzene	ND	0.77	mg/Kg	50	11/21/15 15:49	JLI	SW8260C	
1,2,4-Trimethylbenzene	ND	0.77	mg/Kg	50	11/21/15 15:49	JLI	SW8260C	
1,2-Dibromo-3-chloropropane	ND	0.77	mg/Kg	50	11/21/15 15:49	JLI	SW8260C	
1,2-Dibromoethane	ND	0.0063	mg/Kg	1	11/22/15 13:00	JLI	SW8260C	
1,2-Dichlorobenzene	ND	0.77	mg/Kg	50	11/21/15 15:49	JLI	SW8260C	
1,2-Dichloroethane	ND	0.0063	mg/Kg	1	11/22/15 13:00	JLI	SW8260C	
1,2-Dichloropropane	ND	0.0063	mg/Kg	1	11/22/15 13:00	JLI	SW8260C	
1,3,5-Trimethylbenzene	ND	0.77	mg/Kg	50	11/21/15 15:49	JLI	SW8260C	
1,3-Dichlorobenzene	ND	0.77	mg/Kg	50	11/21/15 15:49	JLI	SW8260C	
1,3-Dichloropropane	ND	0.0063	mg/Kg	1	11/22/15 13:00	JLI	SW8260C	
1,4-Dichlorobenzene	ND	0.77	mg/Kg	50	11/21/15 15:49	JLI	SW8260C	
2,2-Dichloropropane	ND	0.0063	mg/Kg	1	11/22/15 13:00	JLI	SW8260C	
2-Chlorotoluene	ND	0.77	mg/Kg	50	11/21/15 15:49	JLI	SW8260C	
2-Hexanone	ND	0.032	mg/Kg	1	11/22/15 13:00	JLI	SW8260C	
2-Isopropyltoluene	ND	0.77	mg/Kg	50	11/21/15 15:49	JLI	SW8260C	1
4-Chlorotoluene	ND	0.77	mg/Kg	50	11/21/15 15:49	JLI	SW8260C	
4-Methyl-2-pentanone	ND	0.032	mg/Kg	1	11/22/15 13:00	JLI	SW8260C	
Acetone	ND	0.032	mg/Kg	1	11/22/15 13:00	JLI	SW8260C	
Acrylonitrile	ND	0.013	mg/Kg	1	11/22/15 13:00	JLI	SW8260C	
Benzene	ND	0.0063	mg/Kg	1	11/22/15 13:00	JLI	SW8260C	
Bromobenzene	ND	0.77	mg/Kg	50	11/21/15 15:49	JLI	SW8260C	
Bromochloromethane	ND	0.0063	mg/Kg	1	11/22/15 13:00	JLI	SW8260C	
Bromodichloromethane	ND	0.0063	mg/Kg	1	11/22/15 13:00	JLI	SW8260C	
Bromoform	ND	0.0063	mg/Kg	1	11/22/15 13:00	JLI	SW8260C	
Bromomethane	ND	0.0063	mg/Kg	1	11/22/15 13:00	JLI	SW8260C	
Carbon Disulfide	ND	0.0063	mg/Kg	1	11/22/15 13:00	JLI	SW8260C	
Carbon tetrachloride	ND	0.0063	mg/Kg	1	11/22/15 13:00	JLI	SW8260C	
Chlorobenzene	ND	0.0063	mg/Kg	1	11/22/15 13:00	JLI	SW8260C	
Chloroethane	ND	0.0063	mg/Kg	1	11/22/15 13:00	JLI	SW8260C	
Chloroform	ND	0.0063	mg/Kg	1	11/22/15 13:00	JLI	SW8260C	
Chloromethane	ND	0.0063	mg/Kg	1	11/22/15 13:00	JLI	SW8260C	
cis-1,2-Dichloroethene	ND	0.0063	mg/Kg	1	11/22/15 13:00	JLI	SW8260C	
cis-1,3-Dichloropropene	ND	0.0063	mg/Kg	1	11/22/15 13:00	JLI	SW8260C	
Dibromochloromethane	ND	0.0063	mg/Kg	1	11/22/15 13:00	JLI	SW8260C	
Dibromomethane	ND	0.0063	mg/Kg	1	11/22/15 13:00	JLI	SW8260C	
Dichlorodifluoromethane	ND	0.0063	mg/Kg	1	11/22/15 13:00	JLI	SW8260C	
Ethylbenzene	ND	0.0063	mg/Kg	1	11/22/15 13:00	JLI	SW8260C	
Hexachlorobutadiene	ND	0.77	mg/Kg	50	11/21/15 15:49	JLI	SW8260C	
Isopropylbenzene	ND	0.77	mg/Kg	50	11/21/15 15:49	JLI	SW8260C	
m&p-Xylene	ND	0.0063	mg/Kg	1	11/22/15 13:00	JLI	SW8260C	
Methyl Ethyl Ketone	ND	0.032	mg/Kg	1	11/22/15 13:00	JLI	SW8260C	
Methyl t-butyl ether (MTBE)	ND	0.013	mg/Kg	1	11/22/15 13:00	JLI	SW8260C	
Methylene chloride	ND	0.013	mg/Kg	1	11/22/15 13:00	JLI	SW8260C	
Naphthalene	ND	0.77	mg/Kg	50	11/21/15 15:49	JLI	SW8260C	
n-Butylbenzene	ND	0.77	mg/Kg	50	11/21/15 15:49	JLI	SW8260C	

Parameter	Result	RL/ PQL	Units	Dilution	Date/Time	By	Reference	
n-Propylbenzene	ND	0.77	mg/Kg	50	11/21/15 15:49	JLI	SW8260C	
o-Xylene	ND	0.0063	mg/Kg	1	11/22/15 13:00	JLI	SW8260C	
p-Isopropyltoluene	ND	0.77	mg/Kg	50	11/21/15 15:49	JLI	SW8260C	
sec-Butylbenzene	ND	0.77	mg/Kg	50	11/21/15 15:49	JLI	SW8260C	
Styrene	ND	0.0063	mg/Kg	1	11/22/15 13:00	JLI	SW8260C	
tert-Butylbenzene	ND	0.77	mg/Kg	50	11/21/15 15:49	JLI	SW8260C	
Tetrachloroethene	ND	0.0063	mg/Kg	1	11/22/15 13:00	JLI	SW8260C	
Tetrahydrofuran (THF)	ND	0.013	mg/Kg	1	11/22/15 13:00	JLI	SW8260C	1
Toluene	ND	0.0063	mg/Kg	1	11/22/15 13:00	JLI	SW8260C	
Total Xylenes	ND	0.0063	mg/Kg	1	11/22/15 13:00	JLI	SW8260C	
trans-1,2-Dichloroethene	ND	0.0063	mg/Kg	1	11/22/15 13:00	JLI	SW8260C	
trans-1,3-Dichloropropene	ND	0.0063	mg/Kg	1	11/22/15 13:00	JLI	SW8260C	
trans-1,4-dichloro-2-butene	ND	1.5	mg/Kg	50	11/21/15 15:49	JLI	SW8260C	
Trichloroethene	ND	0.0063	mg/Kg	1	11/22/15 13:00	JLI	SW8260C	
Trichlorofluoromethane	ND	0.0063	mg/Kg	1	11/22/15 13:00	JLI	SW8260C	
Trichlorotrifluoroethane	ND	0.0063	mg/Kg	1	11/22/15 13:00	JLI	SW8260C	
Vinyl chloride	ND	0.0063	mg/Kg	1	11/22/15 13:00	JLI	SW8260C	
QA/QC Surrogates								
% 1,2-dichlorobenzene-d4	100		%	50	11/21/15 15:49	JLI	70 - 130 %	
% Bromofluorobenzene	98		%	50	11/21/15 15:49	JLI	70 - 130 %	
% Dibromofluoromethane	99		%	1	11/22/15 13:00	JLI	70 - 130 %	
% Toluene-d8	96		%	1	11/22/15 13:00	JLI	70 - 130 %	

Semivolatiles

1,2,4,5-Tetrachlorobenzene	ND	0.26	mg/Kg	1	11/20/15 18:05	DD	SW8270D
1,2,4-Trichlorobenzene	ND	0.26	mg/Kg	1	11/20/15 18:05	DD	SW8270D
1,2-Dichlorobenzene	ND	0.26	mg/Kg	1	11/20/15 18:05	DD	SW8270D
1,2-Diphenylhydrazine	ND	0.36	mg/Kg	1	11/20/15 18:05	DD	SW8270D
1,3-Dichlorobenzene	ND	0.26	mg/Kg	1	11/20/15 18:05	DD	SW8270D
1,4-Dichlorobenzene	ND	0.26	mg/Kg	1	11/20/15 18:05	DD	SW8270D
2,4,5-Trichlorophenol	ND	0.26	mg/Kg	1	11/20/15 18:05	DD	SW8270D
2,4,6-Trichlorophenol	ND	0.26	mg/Kg	1	11/20/15 18:05	DD	SW8270D
2,4-Dichlorophenol	ND	0.26	mg/Kg	1	11/20/15 18:05	DD	SW8270D
2,4-Dimethylphenol	ND	0.26	mg/Kg	1	11/20/15 18:05	DD	SW8270D
2,4-Dinitrophenol	ND	0.58	mg/Kg	1	11/20/15 18:05	DD	SW8270D
2,4-Dinitrotoluene	ND	0.26	mg/Kg	1	11/20/15 18:05	DD	SW8270D
2,6-Dinitrotoluene	ND	0.26	mg/Kg	1	11/20/15 18:05	DD	SW8270D
2-Chloronaphthalene	ND	0.26	mg/Kg	1	11/20/15 18:05	DD	SW8270D
2-Chlorophenol	ND	0.26	mg/Kg	1	11/20/15 18:05	DD	SW8270D
2-Methylnaphthalene	ND	0.26	mg/Kg	1	11/20/15 18:05	DD	SW8270D
2-Methylphenol (o-cresol)	ND	0.26	mg/Kg	1	11/20/15 18:05	DD	SW8270D
2-Nitroaniline	ND	0.58	mg/Kg	1	11/20/15 18:05	DD	SW8270D
2-Nitrophenol	ND	0.26	mg/Kg	1	11/20/15 18:05	DD	SW8270D
3&4-Methylphenol (m&p-cresol)	ND	0.36	mg/Kg	1	11/20/15 18:05	DD	SW8270D
3,3'-Dichlorobenzidine	ND	0.26	mg/Kg	1	11/20/15 18:05	DD	SW8270D
3-Nitroaniline	ND	0.58	mg/Kg	1	11/20/15 18:05	DD	SW8270D
4,6-Dinitro-2-methylphenol	ND	1.1	mg/Kg	1	11/20/15 18:05	DD	SW8270D
4-Bromophenyl phenyl ether	ND	0.36	mg/Kg	1	11/20/15 18:05	DD	SW8270D
4-Chloro-3-methylphenol	ND	0.26	mg/Kg	1	11/20/15 18:05	DD	SW8270D
4-Chloroaniline	ND	0.26	mg/Kg	1	11/20/15 18:05	DD	SW8270D

Project ID: 526 UNION AVE.
Client ID: SB4 0-2

Phoenix I.D.: BK26201

Parameter	Result	RL/ PQL	Units	Dilution	Date/Time	By	Reference	
4-Chlorophenyl phenyl ether	ND	0.26	mg/Kg	1	11/20/15 18:05	DD	SW8270D	
4-Nitroaniline	ND	0.58	mg/Kg	1	11/20/15 18:05	DD	SW8270D	
4-Nitrophenol	ND	1.1	mg/Kg	1	11/20/15 18:05	DD	SW8270D	
Acenaphthene	ND	0.26	mg/Kg	1	11/20/15 18:05	DD	SW8270D	
Acenaphthylene	ND	0.26	mg/Kg	1	11/20/15 18:05	DD	SW8270D	
Acetophenone	ND	0.26	mg/Kg	1	11/20/15 18:05	DD	SW8270D	
Aniline	ND	1.1	mg/Kg	1	11/20/15 18:05	DD	SW8270D	
Anthracene	ND	0.26	mg/Kg	1	11/20/15 18:05	DD	SW8270D	
Benz(a)anthracene	0.32	0.26	mg/Kg	1	11/20/15 18:05	DD	SW8270D	
Benzidine	ND	0.44	mg/Kg	1	11/20/15 18:05	DD	SW8270D	
Benzo(a)pyrene	0.36	0.26	mg/Kg	1	11/20/15 18:05	DD	SW8270D	
Benzo(b)fluoranthene	0.3	0.26	mg/Kg	1	11/20/15 18:05	DD	SW8270D	
Benzo(ghi)perylene	0.39	0.26	mg/Kg	1	11/20/15 18:05	DD	SW8270D	
Benzo(k)fluoranthene	0.3	0.26	mg/Kg	1	11/20/15 18:05	DD	SW8270D	
Benzoic acid	ND	1.1	mg/Kg	1	11/20/15 18:05	DD	SW8270D	1
Benzyl butyl phthalate	ND	0.26	mg/Kg	1	11/20/15 18:05	DD	SW8270D	
Bis(2-chloroethoxy)methane	ND	0.26	mg/Kg	1	11/20/15 18:05	DD	SW8270D	
Bis(2-chloroethyl)ether	ND	0.36	mg/Kg	1	11/20/15 18:05	DD	SW8270D	
Bis(2-chloroisopropyl)ether	ND	0.26	mg/Kg	1	11/20/15 18:05	DD	SW8270D	
Bis(2-ethylhexyl)phthalate	ND	0.26	mg/Kg	1	11/20/15 18:05	DD	SW8270D	
Carbazole	ND	0.55	mg/Kg	1	11/20/15 18:05	DD	SW8270D	
Chrysene	0.37	0.26	mg/Kg	1	11/20/15 18:05	DD	SW8270D	
Dibenz(a,h)anthracene	ND	0.26	mg/Kg	1	11/20/15 18:05	DD	SW8270D	
Dibenzofuran	ND	0.26	mg/Kg	1	11/20/15 18:05	DD	SW8270D	
Diethyl phthalate	ND	0.26	mg/Kg	1	11/20/15 18:05	DD	SW8270D	
Dimethylphthalate	ND	0.26	mg/Kg	1	11/20/15 18:05	DD	SW8270D	
Di-n-butylphthalate	ND	0.26	mg/Kg	1	11/20/15 18:05	DD	SW8270D	
Di-n-octylphthalate	ND	0.26	mg/Kg	1	11/20/15 18:05	DD	SW8270D	
Fluoranthene	0.51	0.26	mg/Kg	1	11/20/15 18:05	DD	SW8270D	
Fluorene	ND	0.26	mg/Kg	1	11/20/15 18:05	DD	SW8270D	
Hexachlorobenzene	ND	0.26	mg/Kg	1	11/20/15 18:05	DD	SW8270D	
Hexachlorobutadiene	ND	0.26	mg/Kg	1	11/20/15 18:05	DD	SW8270D	
Hexachlorocyclopentadiene	ND	0.26	mg/Kg	1	11/20/15 18:05	DD	SW8270D	
Hexachloroethane	ND	0.26	mg/Kg	1	11/20/15 18:05	DD	SW8270D	
Indeno(1,2,3-cd)pyrene	0.4	0.26	mg/Kg	1	11/20/15 18:05	DD	SW8270D	
Isophorone	ND	0.26	mg/Kg	1	11/20/15 18:05	DD	SW8270D	
Naphthalene	ND	0.26	mg/Kg	1	11/20/15 18:05	DD	SW8270D	
Nitrobenzene	ND	0.26	mg/Kg	1	11/20/15 18:05	DD	SW8270D	
N-Nitrosodimethylamine	ND	0.36	mg/Kg	1	11/20/15 18:05	DD	SW8270D	
N-Nitrosodi-n-propylamine	ND	0.26	mg/Kg	1	11/20/15 18:05	DD	SW8270D	
N-Nitrosodiphenylamine	ND	0.36	mg/Kg	1	11/20/15 18:05	DD	SW8270D	
Pentachloronitrobenzene	ND	0.36	mg/Kg	1	11/20/15 18:05	DD	SW8270D	
Pentachlorophenol	ND	0.36	mg/Kg	1	11/20/15 18:05	DD	SW8270D	
Phenanthrene	0.48	0.26	mg/Kg	1	11/20/15 18:05	DD	SW8270D	
Phenol	ND	0.26	mg/Kg	1	11/20/15 18:05	DD	SW8270D	
Pyrene	0.51	0.26	mg/Kg	1	11/20/15 18:05	DD	SW8270D	
Pyridine	ND	0.36	mg/Kg	1	11/20/15 18:05	DD	SW8270D	
QA/QC Surrogates								
% 2,4,6-Tribromophenol	97		%	1	11/20/15 18:05	DD	30 - 130 %	

Project ID: 526 UNION AVE.
Client ID: SB4 0-2

Phoenix I.D.: BK26201

Parameter	Result	RL/ PQL	Units	Dilution	Date/Time	By	Reference
% 2-Fluorobiphenyl	75		%	1	11/20/15 18:05	DD	30 - 130 %
% 2-Fluorophenol	53		%	1	11/20/15 18:05	DD	30 - 130 %
% Nitrobenzene-d5	70		%	1	11/20/15 18:05	DD	30 - 130 %
% Phenol-d5	64		%	1	11/20/15 18:05	DD	30 - 130 %
% Terphenyl-d14	69		%	1	11/20/15 18:05	DD	30 - 130 %

1 = This parameter is not certified by NY NELAC for this matrix. NY NELAC does not offer certification for all parameters at this time.
B = Present in blank, no bias suspected.

RL/PQL=Reporting/Practical Quantitation Level (Equivalent to NELAC LOQ, Limit of Quanitation) ND=Not Detected BRL=Below Reporting Level
QA/QC Surrogates: Surrogates are compounds (preceeded with a %) added by the lab to determine analysis efficiency. Surrogate results(%) listed in the report are not "detected" compounds.

Comments:

Per 1.4.6 of EPA method 8270D, 1,2-Diphenylhydrazine is unstable and readily converts to Azobenzene. Azobenzene is used for the calibration of 1,2-Diphenylhydrazine.

Please be advised that the NY 375 soil criteria for chromium are based on hexavalent chromium and trivalent chromium.

Volatile Comment:
There was a suppression of the last internal standard in the low level analysis, all affected compounds are reported from the methanol preserved high level analysis which did not exhibit this interference.

All soils, solids and sludges are reported on a dry weight basis unless otherwise noted in the sample comments.

If there are any questions regarding this data, please call Phoenix Client Services at extension 200.
This report must not be reproduced except in full as defined by the attached chain of custody.

Phyllis Shiller, Laboratory Director
November 25, 2015
Reviewed and Released by: Bobbi Aloisa, Vice President

PHOENIX

Environmental Laboratories, Inc.
587 East Middle Turnpike, P.O.Box 370, Manchester, CT 06045
Tel. (860) 645-1102 Fax (860) 645-0823

ACCREDITED IN ACCORDANCE WITH nelac NY # 11301

Analysis Report

November 25, 2015

FOR: Attn:
Creative Environmental Solutions
39 West 37th Street, 14th Floor
New York, NY 10018

Sample Information		Custody Information		Date	Time
Matrix:	SOIL	Collected by:		11/18/15	13:13
Location Code:	CREATENV	Received by:	LB	11/19/15	17:04
Rush Request:	72 Hour	Analyzed by:	see "By" below		
P.O.#:					

Laboratory Data

SDG ID: GBK26195
Phoenix ID: BK26202

Project ID: 526 UNION AVE.
Client ID: SB4 5-7

Parameter	Result	RL/ PQL	Units	Dilution	Date/Time	By	Reference	
Silver	< 0.37	0.37	mg/Kg	1	11/20/15 12:01	LK	SW6010C	
Aluminum	8650	55	mg/Kg	10	11/20/15 08:46	LK	SW6010C	
Arsenic	2.7	0.7	mg/Kg	1	11/20/15 12:01	LK	SW6010C	
Barium	87.4	0.37	mg/Kg	1	11/20/15 12:01	LK	SW6010C	
Beryllium	0.55	0.29	mg/Kg	1	11/20/15 12:01	LK	SW6010C	
Calcium	1710	5.5	mg/Kg	1	11/20/15 12:01	LK	SW6010C	
Cadmium	< 0.37	0.37	mg/Kg	1	11/20/15 12:01	LK	SW6010C	
Cobalt	8.27	0.37	mg/Kg	1	11/20/15 12:01	LK	SW6010C	
Chromium	20.3	0.37	mg/Kg	1	11/20/15 12:01	LK	SW6010C	
Copper	30.2	0.37	mg/kg	1	11/20/15 12:01	LK	SW6010C	
Iron	22400	55	mg/Kg	10	11/20/15 08:46	LK	SW6010C	B
Mercury	0.16	0.03	mg/Kg	1	11/23/15 10:11	RS	SW7471B	
Potassium	1180	55	mg/Kg	10	11/20/15 08:46	LK	SW6010C	
Magnesium	1890	5.5	mg/Kg	1	11/20/15 12:01	LK	SW6010C	
Manganese	450	3.7	mg/Kg	10	11/20/15 08:46	LK	SW6010C	
Sodium	129	5.5	mg/Kg	1	11/20/15 12:01	LK	SW6010C	B
Nickel	12.9	0.37	mg/Kg	1	11/20/15 12:01	LK	SW6010C	
Lead	59.6	0.37	mg/Kg	1	11/20/15 12:01	LK	SW6010C	
Antimony	< 3.7	3.7	mg/Kg	1	11/20/15 12:01	LK	SW6010C	
Selenium	< 1.5	1.5	mg/Kg	1	11/20/15 12:01	LK	SW6010C	
Thallium	< 3.3	3.3	mg/Kg	1	11/20/15 12:01	LK	SW6010C	
Vanadium	38.1	0.37	mg/Kg	1	11/20/15 12:01	LK	SW6010C	
Zinc	49.0	0.37	mg/Kg	1	11/20/15 12:01	LK	SW6010C	
Percent Solid	87		%		11/20/15 01:40	W	SW846-%Solid	
Soil Extraction for PCB	Completed				11/19/15 00:00	BC	SW3545A	
Soil Extraction for Pesticide	Completed				11/19/15 00:00	BC/V	SW3545A	
Soil Extraction for SVOA	Completed				11/20/15 00:00	CB/CKV	SW3545A	
Mercury Digestion	Completed				11/21/15 00:00	W/W	SW7471B	

Project ID: 526 UNION AVE.
Client ID: SB4 5-7

Phoenix I.D.: BK26202

Parameter	Result	RL/ PQL	Units	Dilution	Date/Time	By	Reference
Total Metals Digest	Completed				11/19/15 00:00	G/AG	SW3050B
Field Extraction	Completed				11/18/15 13:13		SW5035A
Polychlorinated Biphenyls							
PCB-1016	ND	0.076	mg/Kg	2	11/20/15 22:47	AW	SW8082A
PCB-1221	ND	0.076	mg/Kg	2	11/20/15 22:47	AW	SW8082A
PCB-1232	ND	0.076	mg/Kg	2	11/20/15 22:47	AW	SW8082A
PCB-1242	ND	0.076	mg/Kg	2	11/20/15 22:47	AW	SW8082A
PCB-1248	ND	0.076	mg/Kg	2	11/20/15 22:47	AW	SW8082A
PCB-1254	ND	0.076	mg/Kg	2	11/20/15 22:47	AW	SW8082A
PCB-1260	ND	0.076	mg/Kg	2	11/20/15 22:47	AW	SW8082A
PCB-1262	ND	0.076	mg/Kg	2	11/20/15 22:47	AW	SW8082A
PCB-1268	ND	0.076	mg/Kg	2	11/20/15 22:47	AW	SW8082A
QA/QC Surrogates							
% DCBP	57		%	2	11/20/15 22:47	AW	30 - 150 %
% TCMX	59		%	2	11/20/15 22:47	AW	30 - 150 %
Pesticides - Soil							
4,4' -DDD	ND	0.0023	mg/Kg	2	11/20/15 22:00	CE	SW8081B
4,4' -DDE	ND	0.0023	mg/Kg	2	11/20/15 22:00	CE	SW8081B
4,4' -DDT	ND	0.0023	mg/Kg	2	11/20/15 22:00	CE	SW8081B
a-BHC	ND	0.0076	mg/Kg	2	11/20/15 22:00	CE	SW8081B
a-Chlordane	ND	0.0038	mg/Kg	2	11/20/15 22:00	CE	SW8081B
Aldrin	ND	0.0038	mg/Kg	2	11/20/15 22:00	CE	SW8081B
b-BHC	ND	0.0076	mg/Kg	2	11/20/15 22:00	CE	SW8081B
Chlordane	ND	0.038	mg/Kg	2	11/20/15 22:00	CE	SW8081B
d-BHC	ND	0.0076	mg/Kg	2	11/20/15 22:00	CE	SW8081B
Dieldrin	ND	0.0038	mg/Kg	2	11/20/15 22:00	CE	SW8081B
Endosulfan I	ND	0.0076	mg/Kg	2	11/20/15 22:00	CE	SW8081B
Endosulfan II	ND	0.0076	mg/Kg	2	11/20/15 22:00	CE	SW8081B
Endosulfan sulfate	ND	0.0076	mg/Kg	2	11/20/15 22:00	CE	SW8081B
Endrin	ND	0.0076	mg/Kg	2	11/20/15 22:00	CE	SW8081B
Endrin aldehyde	ND	0.0076	mg/Kg	2	11/20/15 22:00	CE	SW8081B
Endrin ketone	ND	0.0076	mg/Kg	2	11/20/15 22:00	CE	SW8081B
g-BHC	ND	0.0015	mg/Kg	2	11/20/15 22:00	CE	SW8081B
g-Chlordane	ND	0.0038	mg/Kg	2	11/20/15 22:00	CE	SW8081B
Heptachlor	ND	0.0076	mg/Kg	2	11/20/15 22:00	CE	SW8081B
Heptachlor epoxide	ND	0.0076	mg/Kg	2	11/20/15 22:00	CE	SW8081B
Methoxychlor	ND	0.038	mg/Kg	2	11/20/15 22:00	CE	SW8081B
Toxaphene	ND	0.15	mg/Kg	2	11/20/15 22:00	CE	SW8081B
QA/QC Surrogates							
% DCBP	58		%	2	11/20/15 22:00	CE	30 - 150 %
% TCMX	55		%	2	11/20/15 22:00	CE	30 - 150 %
Volatiles							
1,1,1,2-Tetrachloroethane	ND	0.0053	mg/Kg	1	11/21/15 16:11	JLI	SW8260C
1,1,1-Trichloroethane	ND	0.0053	mg/Kg	1	11/21/15 16:11	JLI	SW8260C
1,1,2,2-Tetrachloroethane	ND	0.0053	mg/Kg	1	11/21/15 16:11	JLI	SW8260C
1,1,2-Trichloroethane	ND	0.0053	mg/Kg	1	11/21/15 16:11	JLI	SW8260C
1,1-Dichloroethane	ND	0.0053	mg/Kg	1	11/21/15 16:11	JLI	SW8260C

Project ID: 526 UNION AVE.
Client ID: SB4 5-7

Phoenix I.D.: BK26202

Parameter	Result	RL/ PQL	Units	Dilution	Date/Time	By	Reference	
1,1-Dichloroethene	ND	0.0053	mg/Kg	1	11/21/15 16:11	JLI	SW8260C	
1,1-Dichloropropene	ND	0.0053	mg/Kg	1	11/21/15 16:11	JLI	SW8260C	
1,2,3-Trichlorobenzene	ND	0.0053	mg/Kg	1	11/21/15 16:11	JLI	SW8260C	
1,2,3-Trichloropropane	ND	0.0053	mg/Kg	1	11/21/15 16:11	JLI	SW8260C	
1,2,4-Trichlorobenzene	ND	0.0053	mg/Kg	1	11/21/15 16:11	JLI	SW8260C	
1,2,4-Trimethylbenzene	ND	0.0053	mg/Kg	1	11/21/15 16:11	JLI	SW8260C	
1,2-Dibromo-3-chloropropane	ND	0.0053	mg/Kg	1	11/21/15 16:11	JLI	SW8260C	
1,2-Dibromoethane	ND	0.0053	mg/Kg	1	11/21/15 16:11	JLI	SW8260C	
1,2-Dichlorobenzene	ND	0.0053	mg/Kg	1	11/21/15 16:11	JLI	SW8260C	
1,2-Dichloroethane	ND	0.0053	mg/Kg	1	11/21/15 16:11	JLI	SW8260C	
1,2-Dichloropropane	ND	0.0053	mg/Kg	1	11/21/15 16:11	JLI	SW8260C	
1,3,5-Trimethylbenzene	ND	0.0053	mg/Kg	1	11/21/15 16:11	JLI	SW8260C	
1,3-Dichlorobenzene	ND	0.0053	mg/Kg	1	11/21/15 16:11	JLI	SW8260C	
1,3-Dichloropropane	ND	0.0053	mg/Kg	1	11/21/15 16:11	JLI	SW8260C	
1,4-Dichlorobenzene	ND	0.0053	mg/Kg	1	11/21/15 16:11	JLI	SW8260C	
2,2-Dichloropropane	ND	0.0053	mg/Kg	1	11/21/15 16:11	JLI	SW8260C	
2-Chlorotoluene	ND	0.0053	mg/Kg	1	11/21/15 16:11	JLI	SW8260C	
2-Hexanone	ND	0.027	mg/Kg	1	11/21/15 16:11	JLI	SW8260C	
2-Isopropyltoluene	ND	0.0053	mg/Kg	1	11/21/15 16:11	JLI	SW8260C	1
4-Chlorotoluene	ND	0.0053	mg/Kg	1	11/21/15 16:11	JLI	SW8260C	
4-Methyl-2-pentanone	ND	0.027	mg/Kg	1	11/21/15 16:11	JLI	SW8260C	
Acetone	ND	0.027	mg/Kg	1	11/21/15 16:11	JLI	SW8260C	
Acrylonitrile	ND	0.011	mg/Kg	1	11/21/15 16:11	JLI	SW8260C	
Benzene	ND	0.0053	mg/Kg	1	11/21/15 16:11	JLI	SW8260C	
Bromobenzene	ND	0.0053	mg/Kg	1	11/21/15 16:11	JLI	SW8260C	
Bromochloromethane	ND	0.0053	mg/Kg	1	11/21/15 16:11	JLI	SW8260C	
Bromodichloromethane	ND	0.0053	mg/Kg	1	11/21/15 16:11	JLI	SW8260C	
Bromoform	ND	0.0053	mg/Kg	1	11/21/15 16:11	JLI	SW8260C	
Bromomethane	ND	0.0053	mg/Kg	1	11/21/15 16:11	JLI	SW8260C	
Carbon Disulfide	ND	0.0053	mg/Kg	1	11/21/15 16:11	JLI	SW8260C	
Carbon tetrachloride	ND	0.0053	mg/Kg	1	11/21/15 16:11	JLI	SW8260C	
Chlorobenzene	ND	0.0053	mg/Kg	1	11/21/15 16:11	JLI	SW8260C	
Chloroethane	ND	0.0053	mg/Kg	1	11/21/15 16:11	JLI	SW8260C	
Chloroform	ND	0.0053	mg/Kg	1	11/21/15 16:11	JLI	SW8260C	
Chloromethane	ND	0.0053	mg/Kg	1	11/21/15 16:11	JLI	SW8260C	
cis-1,2-Dichloroethene	ND	0.0053	mg/Kg	1	11/21/15 16:11	JLI	SW8260C	
cis-1,3-Dichloropropene	ND	0.0053	mg/Kg	1	11/21/15 16:11	JLI	SW8260C	
Dibromochloromethane	ND	0.0053	mg/Kg	1	11/21/15 16:11	JLI	SW8260C	
Dibromomethane	ND	0.0053	mg/Kg	1	11/21/15 16:11	JLI	SW8260C	
Dichlorodifluoromethane	ND	0.0053	mg/Kg	1	11/21/15 16:11	JLI	SW8260C	
Ethylbenzene	ND	0.0053	mg/Kg	1	11/21/15 16:11	JLI	SW8260C	
Hexachlorobutadiene	ND	0.0053	mg/Kg	1	11/21/15 16:11	JLI	SW8260C	
Isopropylbenzene	ND	0.0053	mg/Kg	1	11/21/15 16:11	JLI	SW8260C	
m&p-Xylene	ND	0.0053	mg/Kg	1	11/21/15 16:11	JLI	SW8260C	
Methyl Ethyl Ketone	ND	0.027	mg/Kg	1	11/21/15 16:11	JLI	SW8260C	
Methyl t-butyl ether (MTBE)	ND	0.011	mg/Kg	1	11/21/15 16:11	JLI	SW8260C	
Methylene chloride	ND	0.011	mg/Kg	1	11/21/15 16:11	JLI	SW8260C	
Naphthalene	ND	0.0053	mg/Kg	1	11/21/15 16:11	JLI	SW8260C	
n-Butylbenzene	ND	0.0053	mg/Kg	1	11/21/15 16:11	JLI	SW8260C	

Parameter	Result	RL/ PQL	Units	Dilution	Date/Time	By	Reference	
n-Propylbenzene	ND	0.0053	mg/Kg	1	11/21/15 16:11	JLI	SW8260C	
o-Xylene	ND	0.0053	mg/Kg	1	11/21/15 16:11	JLI	SW8260C	
p-Isopropyltoluene	ND	0.0053	mg/Kg	1	11/21/15 16:11	JLI	SW8260C	
sec-Butylbenzene	ND	0.0053	mg/Kg	1	11/21/15 16:11	JLI	SW8260C	
Styrene	ND	0.0053	mg/Kg	1	11/21/15 16:11	JLI	SW8260C	
tert-Butylbenzene	ND	0.0053	mg/Kg	1	11/21/15 16:11	JLI	SW8260C	
Tetrachloroethene	ND	0.0053	mg/Kg	1	11/21/15 16:11	JLI	SW8260C	
Tetrahydrofuran (THF)	ND	0.011	mg/Kg	1	11/21/15 16:11	JLI	SW8260C	1
Toluene	ND	0.0053	mg/Kg	1	11/21/15 16:11	JLI	SW8260C	
Total Xylenes	ND	0.0053	mg/Kg	1	11/21/15 16:11	JLI	SW8260C	
trans-1,2-Dichloroethene	ND	0.0053	mg/Kg	1	11/21/15 16:11	JLI	SW8260C	
trans-1,3-Dichloropropene	ND	0.0053	mg/Kg	1	11/21/15 16:11	JLI	SW8260C	
trans-1,4-dichloro-2-butene	ND	0.011	mg/Kg	1	11/21/15 16:11	JLI	SW8260C	
Trichloroethene	ND	0.0053	mg/Kg	1	11/21/15 16:11	JLI	SW8260C	
Trichlorofluoromethane	ND	0.0053	mg/Kg	1	11/21/15 16:11	JLI	SW8260C	
Trichlorotrifluoroethane	ND	0.0053	mg/Kg	1	11/21/15 16:11	JLI	SW8260C	
Vinyl chloride	ND	0.0053	mg/Kg	1	11/21/15 16:11	JLI	SW8260C	
QA/QC Surrogates								
% 1,2-dichlorobenzene-d4	102		%	1	11/21/15 16:11	JLI	70 - 130 %	
% Bromofluorobenzene	96		%	1	11/21/15 16:11	JLI	70 - 130 %	
% Dibromofluoromethane	96		%	1	11/21/15 16:11	JLI	70 - 130 %	
% Toluene-d8	99		%	1	11/21/15 16:11	JLI	70 - 130 %	

Semivolatiles

1,2,4,5-Tetrachlorobenzene	ND	0.27	mg/Kg	1	11/21/15 05:49	DD	SW8270D
1,2,4-Trichlorobenzene	ND	0.27	mg/Kg	1	11/21/15 05:49	DD	SW8270D
1,2-Dichlorobenzene	ND	0.27	mg/Kg	1	11/21/15 05:49	DD	SW8270D
1,2-Diphenylhydrazine	ND	0.38	mg/Kg	1	11/21/15 05:49	DD	SW8270D
1,3-Dichlorobenzene	ND	0.27	mg/Kg	1	11/21/15 05:49	DD	SW8270D
1,4-Dichlorobenzene	ND	0.27	mg/Kg	1	11/21/15 05:49	DD	SW8270D
2,4,5-Trichlorophenol	ND	0.27	mg/Kg	1	11/21/15 05:49	DD	SW8270D
2,4,6-Trichlorophenol	ND	0.27	mg/Kg	1	11/21/15 05:49	DD	SW8270D
2,4-Dichlorophenol	ND	0.27	mg/Kg	1	11/21/15 05:49	DD	SW8270D
2,4-Dimethylphenol	ND	0.27	mg/Kg	1	11/21/15 05:49	DD	SW8270D
2,4-Dinitrophenol	ND	0.61	mg/Kg	1	11/21/15 05:49	DD	SW8270D
2,4-Dinitrotoluene	ND	0.27	mg/Kg	1	11/21/15 05:49	DD	SW8270D
2,6-Dinitrotoluene	ND	0.27	mg/Kg	1	11/21/15 05:49	DD	SW8270D
2-Chloronaphthalene	ND	0.27	mg/Kg	1	11/21/15 05:49	DD	SW8270D
2-Chlorophenol	ND	0.27	mg/Kg	1	11/21/15 05:49	DD	SW8270D
2-Methylnaphthalene	ND	0.27	mg/Kg	1	11/21/15 05:49	DD	SW8270D
2-Methylphenol (o-cresol)	ND	0.27	mg/Kg	1	11/21/15 05:49	DD	SW8270D
2-Nitroaniline	ND	0.61	mg/Kg	1	11/21/15 05:49	DD	SW8270D
2-Nitrophenol	ND	0.27	mg/Kg	1	11/21/15 05:49	DD	SW8270D
3&4-Methylphenol (m&p-cresol)	ND	0.38	mg/Kg	1	11/21/15 05:49	DD	SW8270D
3,3'-Dichlorobenzidine	ND	0.27	mg/Kg	1	11/21/15 05:49	DD	SW8270D
3-Nitroaniline	ND	0.61	mg/Kg	1	11/21/15 05:49	DD	SW8270D
4,6-Dinitro-2-methylphenol	ND	1.1	mg/Kg	1	11/21/15 05:49	DD	SW8270D
4-Bromophenyl phenyl ether	ND	0.38	mg/Kg	1	11/21/15 05:49	DD	SW8270D
4-Chloro-3-methylphenol	ND	0.27	mg/Kg	1	11/21/15 05:49	DD	SW8270D
4-Chloroaniline	ND	0.27	mg/Kg	1	11/21/15 05:49	DD	SW8270D

Project ID: 526 UNION AVE.
Client ID: SB4 5-7

Phoenix I.D.: BK26202

Parameter	Result	RL/ PQL	Units	Dilution	Date/Time	By	Reference	
4-Chlorophenyl phenyl ether	ND	0.27	mg/Kg	1	11/21/15 05:49	DD	SW8270D	
4-Nitroaniline	ND	0.61	mg/Kg	1	11/21/15 05:49	DD	SW8270D	
4-Nitrophenol	ND	1.1	mg/Kg	1	11/21/15 05:49	DD	SW8270D	
Acenaphthene	ND	0.27	mg/Kg	1	11/21/15 05:49	DD	SW8270D	
Acenaphthylene	ND	0.27	mg/Kg	1	11/21/15 05:49	DD	SW8270D	
Acetophenone	ND	0.27	mg/Kg	1	11/21/15 05:49	DD	SW8270D	
Aniline	ND	1.1	mg/Kg	1	11/21/15 05:49	DD	SW8270D	
Anthracene	ND	0.27	mg/Kg	1	11/21/15 05:49	DD	SW8270D	
Benz(a)anthracene	ND	0.27	mg/Kg	1	11/21/15 05:49	DD	SW8270D	
Benzidine	ND	0.46	mg/Kg	1	11/21/15 05:49	DD	SW8270D	
Benzo(a)pyrene	ND	0.27	mg/Kg	1	11/21/15 05:49	DD	SW8270D	
Benzo(b)fluoranthene	ND	0.27	mg/Kg	1	11/21/15 05:49	DD	SW8270D	
Benzo(ghi)perylene	ND	0.27	mg/Kg	1	11/21/15 05:49	DD	SW8270D	
Benzo(k)fluoranthene	ND	0.27	mg/Kg	1	11/21/15 05:49	DD	SW8270D	
Benzoic acid	ND	1.1	mg/Kg	1	11/21/15 05:49	DD	SW8270D	1
Benzyl butyl phthalate	ND	0.27	mg/Kg	1	11/21/15 05:49	DD	SW8270D	
Bis(2-chloroethoxy)methane	ND	0.27	mg/Kg	1	11/21/15 05:49	DD	SW8270D	
Bis(2-chloroethyl)ether	ND	0.38	mg/Kg	1	11/21/15 05:49	DD	SW8270D	
Bis(2-chloroisopropyl)ether	ND	0.27	mg/Kg	1	11/21/15 05:49	DD	SW8270D	
Bis(2-ethylhexyl)phthalate	ND	0.27	mg/Kg	1	11/21/15 05:49	DD	SW8270D	
Carbazole	ND	0.57	mg/Kg	1	11/21/15 05:49	DD	SW8270D	
Chrysene	ND	0.27	mg/Kg	1	11/21/15 05:49	DD	SW8270D	
Dibenz(a,h)anthracene	ND	0.27	mg/Kg	1	11/21/15 05:49	DD	SW8270D	
Dibenzofuran	ND	0.27	mg/Kg	1	11/21/15 05:49	DD	SW8270D	
Diethyl phthalate	ND	0.27	mg/Kg	1	11/21/15 05:49	DD	SW8270D	
Dimethylphthalate	ND	0.27	mg/Kg	1	11/21/15 05:49	DD	SW8270D	
Di-n-butylphthalate	ND	0.27	mg/Kg	1	11/21/15 05:49	DD	SW8270D	
Di-n-octylphthalate	ND	0.27	mg/Kg	1	11/21/15 05:49	DD	SW8270D	
Fluoranthene	ND	0.27	mg/Kg	1	11/21/15 05:49	DD	SW8270D	
Fluorene	ND	0.27	mg/Kg	1	11/21/15 05:49	DD	SW8270D	
Hexachlorobenzene	ND	0.27	mg/Kg	1	11/21/15 05:49	DD	SW8270D	
Hexachlorobutadiene	ND	0.27	mg/Kg	1	11/21/15 05:49	DD	SW8270D	
Hexachlorocyclopentadiene	ND	0.27	mg/Kg	1	11/21/15 05:49	DD	SW8270D	
Hexachloroethane	ND	0.27	mg/Kg	1	11/21/15 05:49	DD	SW8270D	
Indeno(1,2,3-cd)pyrene	ND	0.27	mg/Kg	1	11/21/15 05:49	DD	SW8270D	
Isophorone	ND	0.27	mg/Kg	1	11/21/15 05:49	DD	SW8270D	
Naphthalene	ND	0.27	mg/Kg	1	11/21/15 05:49	DD	SW8270D	
Nitrobenzene	ND	0.27	mg/Kg	1	11/21/15 05:49	DD	SW8270D	
N-Nitrosodimethylamine	ND	0.38	mg/Kg	1	11/21/15 05:49	DD	SW8270D	
N-Nitrosodi-n-propylamine	ND	0.27	mg/Kg	1	11/21/15 05:49	DD	SW8270D	
N-Nitrosodiphenylamine	ND	0.38	mg/Kg	1	11/21/15 05:49	DD	SW8270D	
Pentachloronitrobenzene	ND	0.38	mg/Kg	1	11/21/15 05:49	DD	SW8270D	
Pentachlorophenol	ND	0.38	mg/Kg	1	11/21/15 05:49	DD	SW8270D	
Phenanthrene	ND	0.27	mg/Kg	1	11/21/15 05:49	DD	SW8270D	
Phenol	ND	0.27	mg/Kg	1	11/21/15 05:49	DD	SW8270D	
Pyrene	ND	0.27	mg/Kg	1	11/21/15 05:49	DD	SW8270D	
Pyridine	ND	0.38	mg/Kg	1	11/21/15 05:49	DD	SW8270D	
QA/QC Surrogates								
% 2,4,6-Tribromophenol	77		%	1	11/21/15 05:49	DD	30 - 130 %	

Project ID: 526 UNION AVE.
Client ID: SB4 5-7

Phoenix I.D.: BK26202

Parameter	Result	RL/ PQL	Units	Dilution	Date/Time	By	Reference
% 2-Fluorobiphenyl	59		%	1	11/21/15 05:49	DD	30 - 130 %
% 2-Fluorophenol	49		%	1	11/21/15 05:49	DD	30 - 130 %
% Nitrobenzene-d5	58		%	1	11/21/15 05:49	DD	30 - 130 %
% Phenol-d5	61		%	1	11/21/15 05:49	DD	30 - 130 %
% Terphenyl-d14	89		%	1	11/21/15 05:49	DD	30 - 130 %

1 = This parameter is not certified by NY NELAC for this matrix. NY NELAC does not offer certification for all parameters at this time.
B = Present in blank, no bias suspected.

RL/PQL=Reporting/Practical Quantitation Level (Equivalent to NELAC LOQ, Limit of Quanitation) ND=Not Detected BRL=Below Reporting Level
QA/QC Surrogates: Surrogates are compounds (preceeded with a %) added by the lab to determine analysis efficiency. Surrogate results(%) listed in the report are not "detected" compounds.

Comments:

Per 1.4.6 of EPA method 8270D, 1,2-Diphenylhydrazine is unstable and readily converts to Azobenzene. Azobenzene is used for the calibration of 1,2-Diphenylhydrazine.

Please be advised that the NY 375 soil criteria for chromium are based on hexavalent chromium and trivalent chromium.

All soils, solids and sludges are reported on a dry weight basis unless otherwise noted in the sample comments.

If there are any questions regarding this data, please call Phoenix Client Services at extension 200.
This report must not be reproduced except in full as defined by the attached chain of custody.

Phyllis Shiller, Laboratory Director
November 25, 2015
Reviewed and Released by: Bobbi Aloisa, Vice President

PHOENIX

Environmental Laboratories, Inc.
587 East Middle Turnpike, P.O.Box 370, Manchester, CT 06045
Tel. (860) 645-1102 Fax (860) 645-0823

ACCREDITED IN ACCORDANCE WITH nelac NY # 11301

Analysis Report

November 25, 2015

FOR: Attn:
Creative Environmental Solutions
39 West 37th Street, 14th Floor
New York, NY 10018

Sample Information		Custody Information		Date	Time
Matrix:	SOIL	Collected by:		11/18/15	14:15
Location Code:	CREATENV	Received by:	LB	11/19/15	17:04
Rush Request:	72 Hour	Analyzed by:	see "By" below		
P.O.#:					

Laboratory Data

SDG ID: GBK26195
Phoenix ID: BK26203

Project ID: 526 UNION AVE.
Client ID: SB5 0-2

Parameter	Result	RL/ PQL	Units	Dilution	Date/Time	By	Reference	
Silver	1.27	0.32	mg/Kg	1	11/21/15 15:36	LK	SW6010C	
Aluminum	3670	48	mg/Kg	10	11/21/15 14:28	LK	SW6010C	
Arsenic	10.3	0.6	mg/Kg	1	11/21/15 15:36	LK	SW6010C	
Barium	230	0.32	mg/Kg	1	11/21/15 15:36	LK	SW6010C	
Beryllium	< 0.26	0.26	mg/Kg	1	11/21/15 15:36	LK	SW6010C	
Calcium	96900	480	mg/Kg	100	11/23/15 08:35	LK	SW6010C	
Cadmium	14.2	0.32	mg/Kg	1	11/21/15 15:36	LK	SW6010C	
Cobalt	6.61	0.32	mg/Kg	1	11/21/15 15:36	LK	SW6010C	
Chromium	23.3	0.32	mg/Kg	1	11/21/15 15:36	LK	SW6010C	
Copper	143	3.2	mg/kg	10	11/21/15 14:28	LK	SW6010C	
Iron	29500	48	mg/Kg	10	11/21/15 14:28	LK	SW6010C	
Mercury	0.99	0.03	mg/Kg	1	11/23/15 10:13	RS	SW7471B	
Potassium	893	4.8	mg/Kg	1	11/21/15 15:36	LK	SW6010C	
Magnesium	44500	480	mg/Kg	100	11/23/15 08:35	LK	SW6010C	
Manganese	315	3.2	mg/Kg	10	11/21/15 14:28	LK	SW6010C	
Sodium	278	4.8	mg/Kg	1	11/21/15 15:36	LK	SW6010C	
Nickel	20.4	0.32	mg/Kg	1	11/21/15 15:36	LK	SW6010C	
Lead	986	32	mg/Kg	100	11/23/15 08:35	LK	SW6010C	B
Antimony	< 3.2	3.2	mg/Kg	1	11/21/15 15:36	LK	SW6010C	
Selenium	< 1.3	1.3	mg/Kg	1	11/21/15 15:36	LK	SW6010C	
Thallium	< 2.9	2.9	mg/Kg	1	11/21/15 15:36	LK	SW6010C	
Vanadium	46.0	0.32	mg/Kg	1	11/21/15 15:36	LK	SW6010C	
Zinc	874	3.2	mg/Kg	10	11/21/15 14:28	LK	SW6010C	
Percent Solid	95		%		11/20/15 01:40	W	SW846-%Solid	
Soil Extraction for PCB	Completed				11/19/15 00:00	BC	SW3545A	
Soil Extraction for Pesticide	Completed				11/19/15 00:00	BC/V	SW3545A	
Soil Extraction for SVOA	Completed				11/20/15 00:00	CB/CKV	SW3545A	
Mercury Digestion	Completed				11/21/15 00:00	W/W	SW7471B	

Project ID: 526 UNION AVE.
Client ID: SB5 0-2

Phoenix I.D.: BK26203

Parameter	Result	RL/ PQL	Units	Dilution	Date/Time	By	Reference
Total Metals Digest	Completed				11/20/15 00:00	G/AG/T	SW3050B
Field Extraction	Completed				11/18/15 14:15		SW5035A
Polychlorinated Biphenyls							
PCB-1016	ND	0.068	mg/Kg	2	11/20/15 19:58	AW	SW8082A
PCB-1221	ND	0.068	mg/Kg	2	11/20/15 19:58	AW	SW8082A
PCB-1232	ND	0.068	mg/Kg	2	11/20/15 19:58	AW	SW8082A
PCB-1242	ND	0.068	mg/Kg	2	11/20/15 19:58	AW	SW8082A
PCB-1248	ND	0.068	mg/Kg	2	11/20/15 19:58	AW	SW8082A
PCB-1254	ND	0.068	mg/Kg	2	11/20/15 19:58	AW	SW8082A
PCB-1260	ND	0.068	mg/Kg	2	11/20/15 19:58	AW	SW8082A
PCB-1262	ND	0.068	mg/Kg	2	11/20/15 19:58	AW	SW8082A
PCB-1268	ND	0.068	mg/Kg	2	11/20/15 19:58	AW	SW8082A
QA/QC Surrogates							
% DCBP	77		%	2	11/20/15 19:58	AW	30 - 150 %
% TCMX	77		%	2	11/20/15 19:58	AW	30 - 150 %
Pesticides - Soil							
4,4' -DDD	ND	0.0021	mg/Kg	2	11/24/15 12:35	CE	SW8081B
4,4' -DDE	ND	0.0021	mg/Kg	2	11/24/15 12:35	CE	SW8081B
4,4' -DDT	ND	0.0021	mg/Kg	2	11/24/15 12:35	CE	SW8081B
a-BHC	ND	0.0068	mg/Kg	2	11/24/15 12:35	CE	SW8081B
a-Chlordane	ND	0.006	mg/Kg	2	11/24/15 12:35	CE	SW8081B
Aldrin	ND	0.0034	mg/Kg	2	11/24/15 12:35	CE	SW8081B
b-BHC	ND	0.0068	mg/Kg	2	11/24/15 12:35	CE	SW8081B
Chlordane	ND	0.034	mg/Kg	2	11/24/15 12:35	CE	SW8081B
d-BHC	ND	0.0068	mg/Kg	2	11/24/15 12:35	CE	SW8081B
Dieldrin	ND	0.0034	mg/Kg	2	11/24/15 12:35	CE	SW8081B
Endosulfan I	ND	0.0068	mg/Kg	2	11/24/15 12:35	CE	SW8081B
Endosulfan II	ND	0.0068	mg/Kg	2	11/24/15 12:35	CE	SW8081B
Endosulfan sulfate	ND	0.04	mg/Kg	2	11/24/15 12:35	CE	SW8081B
Endrin	ND	0.0068	mg/Kg	2	11/24/15 12:35	CE	SW8081B
Endrin aldehyde	ND	0.0068	mg/Kg	2	11/24/15 12:35	CE	SW8081B
Endrin ketone	ND	0.0068	mg/Kg	2	11/24/15 12:35	CE	SW8081B
g-BHC	ND	0.004	mg/Kg	2	11/24/15 12:35	CE	SW8081B
g-Chlordane	ND	0.004	mg/Kg	2	11/24/15 12:35	CE	SW8081B
Heptachlor	ND	0.0068	mg/Kg	2	11/24/15 12:35	CE	SW8081B
Heptachlor epoxide	ND	0.0068	mg/Kg	2	11/24/15 12:35	CE	SW8081B
Methoxychlor	ND	0.034	mg/Kg	2	11/24/15 12:35	CE	SW8081B
Toxaphene	ND	0.14	mg/Kg	2	11/24/15 12:35	CE	SW8081B
QA/QC Surrogates							
% DCBP	78		%	2	11/24/15 12:35	CE	30 - 150 %
% TCMX	119		%	2	11/24/15 12:35	CE	30 - 150 %
Volatiles							
1,1,1,2-Tetrachloroethane	ND	0.0047	mg/Kg	1	11/21/15 16:32	JLI	SW8260C
1,1,1-Trichloroethane	ND	0.0047	mg/Kg	1	11/21/15 16:32	JLI	SW8260C
1,1,2,2-Tetrachloroethane	ND	0.0047	mg/Kg	1	11/21/15 16:32	JLI	SW8260C
1,1,2-Trichloroethane	ND	0.0047	mg/Kg	1	11/21/15 16:32	JLI	SW8260C
1,1-Dichloroethane	ND	0.0047	mg/Kg	1	11/21/15 16:32	JLI	SW8260C

Project ID: 526 UNION AVE.
Client ID: SB5 0-2

Phoenix I.D.: BK26203

Parameter	Result	RL/ PQL	Units	Dilution	Date/Time	By	Reference	
1,1-Dichloroethene	ND	0.0047	mg/Kg	1	11/21/15 16:32	JLI	SW8260C	
1,1-Dichloropropene	ND	0.0047	mg/Kg	1	11/21/15 16:32	JLI	SW8260C	
1,2,3-Trichlorobenzene	ND	0.0047	mg/Kg	1	11/21/15 16:32	JLI	SW8260C	
1,2,3-Trichloropropane	ND	0.0047	mg/Kg	1	11/21/15 16:32	JLI	SW8260C	
1,2,4-Trichlorobenzene	ND	0.0047	mg/Kg	1	11/21/15 16:32	JLI	SW8260C	
1,2,4-Trimethylbenzene	ND	0.0047	mg/Kg	1	11/21/15 16:32	JLI	SW8260C	
1,2-Dibromo-3-chloropropane	ND	0.0047	mg/Kg	1	11/21/15 16:32	JLI	SW8260C	
1,2-Dibromoethane	ND	0.0047	mg/Kg	1	11/21/15 16:32	JLI	SW8260C	
1,2-Dichlorobenzene	ND	0.0047	mg/Kg	1	11/21/15 16:32	JLI	SW8260C	
1,2-Dichloroethane	ND	0.0047	mg/Kg	1	11/21/15 16:32	JLI	SW8260C	
1,2-Dichloropropane	ND	0.0047	mg/Kg	1	11/21/15 16:32	JLI	SW8260C	
1,3,5-Trimethylbenzene	ND	0.0047	mg/Kg	1	11/21/15 16:32	JLI	SW8260C	
1,3-Dichlorobenzene	ND	0.0047	mg/Kg	1	11/21/15 16:32	JLI	SW8260C	
1,3-Dichloropropane	ND	0.0047	mg/Kg	1	11/21/15 16:32	JLI	SW8260C	
1,4-Dichlorobenzene	ND	0.0047	mg/Kg	1	11/21/15 16:32	JLI	SW8260C	
2,2-Dichloropropane	ND	0.0047	mg/Kg	1	11/21/15 16:32	JLI	SW8260C	
2-Chlorotoluene	ND	0.0047	mg/Kg	1	11/21/15 16:32	JLI	SW8260C	
2-Hexanone	ND	0.023	mg/Kg	1	11/21/15 16:32	JLI	SW8260C	
2-Isopropyltoluene	ND	0.0047	mg/Kg	1	11/21/15 16:32	JLI	SW8260C	1
4-Chlorotoluene	ND	0.0047	mg/Kg	1	11/21/15 16:32	JLI	SW8260C	
4-Methyl-2-pentanone	ND	0.023	mg/Kg	1	11/21/15 16:32	JLI	SW8260C	
Acetone	ND	0.023	mg/Kg	1	11/21/15 16:32	JLI	SW8260C	
Acrylonitrile	ND	0.0094	mg/Kg	1	11/21/15 16:32	JLI	SW8260C	
Benzene	ND	0.0047	mg/Kg	1	11/21/15 16:32	JLI	SW8260C	
Bromobenzene	ND	0.0047	mg/Kg	1	11/21/15 16:32	JLI	SW8260C	
Bromochloromethane	ND	0.0047	mg/Kg	1	11/21/15 16:32	JLI	SW8260C	
Bromodichloromethane	ND	0.0047	mg/Kg	1	11/21/15 16:32	JLI	SW8260C	
Bromoform	ND	0.0047	mg/Kg	1	11/21/15 16:32	JLI	SW8260C	
Bromomethane	ND	0.0047	mg/Kg	1	11/21/15 16:32	JLI	SW8260C	
Carbon Disulfide	ND	0.0047	mg/Kg	1	11/21/15 16:32	JLI	SW8260C	
Carbon tetrachloride	ND	0.0047	mg/Kg	1	11/21/15 16:32	JLI	SW8260C	
Chlorobenzene	ND	0.0047	mg/Kg	1	11/21/15 16:32	JLI	SW8260C	
Chloroethane	ND	0.0047	mg/Kg	1	11/21/15 16:32	JLI	SW8260C	
Chloroform	ND	0.0047	mg/Kg	1	11/21/15 16:32	JLI	SW8260C	
Chloromethane	ND	0.0047	mg/Kg	1	11/21/15 16:32	JLI	SW8260C	
cis-1,2-Dichloroethene	ND	0.0047	mg/Kg	1	11/21/15 16:32	JLI	SW8260C	
cis-1,3-Dichloropropene	ND	0.0047	mg/Kg	1	11/21/15 16:32	JLI	SW8260C	
Dibromochloromethane	ND	0.0047	mg/Kg	1	11/21/15 16:32	JLI	SW8260C	
Dibromomethane	ND	0.0047	mg/Kg	1	11/21/15 16:32	JLI	SW8260C	
Dichlorodifluoromethane	ND	0.0047	mg/Kg	1	11/21/15 16:32	JLI	SW8260C	
Ethylbenzene	ND	0.0047	mg/Kg	1	11/21/15 16:32	JLI	SW8260C	
Hexachlorobutadiene	ND	0.0047	mg/Kg	1	11/21/15 16:32	JLI	SW8260C	
Isopropylbenzene	ND	0.0047	mg/Kg	1	11/21/15 16:32	JLI	SW8260C	
m&p-Xylene	ND	0.0047	mg/Kg	1	11/21/15 16:32	JLI	SW8260C	
Methyl Ethyl Ketone	ND	0.023	mg/Kg	1	11/21/15 16:32	JLI	SW8260C	
Methyl t-butyl ether (MTBE)	ND	0.0094	mg/Kg	1	11/21/15 16:32	JLI	SW8260C	
Methylene chloride	ND	0.0094	mg/Kg	1	11/21/15 16:32	JLI	SW8260C	
Naphthalene	ND	0.0047	mg/Kg	1	11/21/15 16:32	JLI	SW8260C	
n-Butylbenzene	ND	0.0047	mg/Kg	1	11/21/15 16:32	JLI	SW8260C	

Parameter	Result	RL/ PQL	Units	Dilution	Date/Time	By	Reference	
n-Propylbenzene	ND	0.0047	mg/Kg	1	11/21/15 16:32	JLI	SW8260C	
o-Xylene	ND	0.0047	mg/Kg	1	11/21/15 16:32	JLI	SW8260C	
p-Isopropyltoluene	ND	0.0047	mg/Kg	1	11/21/15 16:32	JLI	SW8260C	
sec-Butylbenzene	ND	0.0047	mg/Kg	1	11/21/15 16:32	JLI	SW8260C	
Styrene	ND	0.0047	mg/Kg	1	11/21/15 16:32	JLI	SW8260C	
tert-Butylbenzene	ND	0.0047	mg/Kg	1	11/21/15 16:32	JLI	SW8260C	
Tetrachloroethene	ND	0.0047	mg/Kg	1	11/21/15 16:32	JLI	SW8260C	
Tetrahydrofuran (THF)	ND	0.0094	mg/Kg	1	11/21/15 16:32	JLI	SW8260C	1
Toluene	ND	0.0047	mg/Kg	1	11/21/15 16:32	JLI	SW8260C	
Total Xylenes	ND	0.0047	mg/Kg	1	11/21/15 16:32	JLI	SW8260C	
trans-1,2-Dichloroethene	ND	0.0047	mg/Kg	1	11/21/15 16:32	JLI	SW8260C	
trans-1,3-Dichloropropene	ND	0.0047	mg/Kg	1	11/21/15 16:32	JLI	SW8260C	
trans-1,4-dichloro-2-butene	ND	0.0094	mg/Kg	1	11/21/15 16:32	JLI	SW8260C	
Trichloroethene	ND	0.0047	mg/Kg	1	11/21/15 16:32	JLI	SW8260C	
Trichlorofluoromethane	ND	0.0047	mg/Kg	1	11/21/15 16:32	JLI	SW8260C	
Trichlorotrifluoroethane	ND	0.0047	mg/Kg	1	11/21/15 16:32	JLI	SW8260C	
Vinyl chloride	ND	0.0047	mg/Kg	1	11/21/15 16:32	JLI	SW8260C	
QA/QC Surrogates								
% 1,2-dichlorobenzene-d4	99		%	1	11/21/15 16:32	JLI	70 - 130 %	
% Bromofluorobenzene	87		%	1	11/21/15 16:32	JLI	70 - 130 %	
% Dibromofluoromethane	107		%	1	11/21/15 16:32	JLI	70 - 130 %	
% Toluene-d8	93		%	1	11/21/15 16:32	JLI	70 - 130 %	

Semivolatiles

1,2,4,5-Tetrachlorobenzene	ND	0.24	mg/Kg	1	11/21/15 06:12	DD	SW8270D
1,2,4-Trichlorobenzene	ND	0.24	mg/Kg	1	11/21/15 06:12	DD	SW8270D
1,2-Dichlorobenzene	ND	0.24	mg/Kg	1	11/21/15 06:12	DD	SW8270D
1,2-Diphenylhydrazine	ND	0.35	mg/Kg	1	11/21/15 06:12	DD	SW8270D
1,3-Dichlorobenzene	ND	0.24	mg/Kg	1	11/21/15 06:12	DD	SW8270D
1,4-Dichlorobenzene	ND	0.24	mg/Kg	1	11/21/15 06:12	DD	SW8270D
2,4,5-Trichlorophenol	ND	0.24	mg/Kg	1	11/21/15 06:12	DD	SW8270D
2,4,6-Trichlorophenol	ND	0.24	mg/Kg	1	11/21/15 06:12	DD	SW8270D
2,4-Dichlorophenol	ND	0.24	mg/Kg	1	11/21/15 06:12	DD	SW8270D
2,4-Dimethylphenol	ND	0.24	mg/Kg	1	11/21/15 06:12	DD	SW8270D
2,4-Dinitrophenol	ND	0.56	mg/Kg	1	11/21/15 06:12	DD	SW8270D
2,4-Dinitrotoluene	ND	0.24	mg/Kg	1	11/21/15 06:12	DD	SW8270D
2,6-Dinitrotoluene	ND	0.24	mg/Kg	1	11/21/15 06:12	DD	SW8270D
2-Chloronaphthalene	ND	0.24	mg/Kg	1	11/21/15 06:12	DD	SW8270D
2-Chlorophenol	ND	0.24	mg/Kg	1	11/21/15 06:12	DD	SW8270D
2-Methylnaphthalene	ND	0.24	mg/Kg	1	11/21/15 06:12	DD	SW8270D
2-Methylphenol (o-cresol)	ND	0.24	mg/Kg	1	11/21/15 06:12	DD	SW8270D
2-Nitroaniline	ND	0.56	mg/Kg	1	11/21/15 06:12	DD	SW8270D
2-Nitrophenol	ND	0.24	mg/Kg	1	11/21/15 06:12	DD	SW8270D
3&4-Methylphenol (m&p-cresol)	ND	0.35	mg/Kg	1	11/21/15 06:12	DD	SW8270D
3,3'-Dichlorobenzidine	ND	0.24	mg/Kg	1	11/21/15 06:12	DD	SW8270D
3-Nitroaniline	ND	0.56	mg/Kg	1	11/21/15 06:12	DD	SW8270D
4,6-Dinitro-2-methylphenol	ND	1	mg/Kg	1	11/21/15 06:12	DD	SW8270D
4-Bromophenyl phenyl ether	ND	0.35	mg/Kg	1	11/21/15 06:12	DD	SW8270D
4-Chloro-3-methylphenol	ND	0.24	mg/Kg	1	11/21/15 06:12	DD	SW8270D
4-Chloroaniline	ND	0.24	mg/Kg	1	11/21/15 06:12	DD	SW8270D

Project ID: 526 UNION AVE.
Client ID: SB5 0-2

Phoenix I.D.: BK26203

Parameter	Result	RL/ PQL	Units	Dilution	Date/Time	By	Reference	
4-Chlorophenyl phenyl ether	ND	0.24	mg/Kg	1	11/21/15 06:12	DD	SW8270D	
4-Nitroaniline	ND	0.56	mg/Kg	1	11/21/15 06:12	DD	SW8270D	
4-Nitrophenol	ND	1	mg/Kg	1	11/21/15 06:12	DD	SW8270D	
Acenaphthene	ND	0.24	mg/Kg	1	11/21/15 06:12	DD	SW8270D	
Acenaphthylene	ND	0.24	mg/Kg	1	11/21/15 06:12	DD	SW8270D	
Acetophenone	ND	0.24	mg/Kg	1	11/21/15 06:12	DD	SW8270D	
Aniline	ND	1	mg/Kg	1	11/21/15 06:12	DD	SW8270D	
Anthracene	ND	0.24	mg/Kg	1	11/21/15 06:12	DD	SW8270D	
Benz(a)anthracene	0.39	0.24	mg/Kg	1	11/21/15 06:12	DD	SW8270D	
Benzidine	ND	0.42	mg/Kg	1	11/21/15 06:12	DD	SW8270D	
Benzo(a)pyrene	0.47	0.24	mg/Kg	1	11/21/15 06:12	DD	SW8270D	
Benzo(b)fluoranthene	0.35	0.24	mg/Kg	1	11/21/15 06:12	DD	SW8270D	
Benzo(ghi)perylene	0.29	0.24	mg/Kg	1	11/21/15 06:12	DD	SW8270D	
Benzo(k)fluoranthene	0.35	0.24	mg/Kg	1	11/21/15 06:12	DD	SW8270D	
Benzoic acid	ND	1	mg/Kg	1	11/21/15 06:12	DD	SW8270D	1
Benzyl butyl phthalate	ND	0.24	mg/Kg	1	11/21/15 06:12	DD	SW8270D	
Bis(2-chloroethoxy)methane	ND	0.24	mg/Kg	1	11/21/15 06:12	DD	SW8270D	
Bis(2-chloroethyl)ether	ND	0.35	mg/Kg	1	11/21/15 06:12	DD	SW8270D	
Bis(2-chloroisopropyl)ether	ND	0.24	mg/Kg	1	11/21/15 06:12	DD	SW8270D	
Bis(2-ethylhexyl)phthalate	ND	0.24	mg/Kg	1	11/21/15 06:12	DD	SW8270D	
Carbazole	ND	0.52	mg/Kg	1	11/21/15 06:12	DD	SW8270D	
Chrysene	0.58	0.24	mg/Kg	1	11/21/15 06:12	DD	SW8270D	
Dibenz(a,h)anthracene	ND	0.24	mg/Kg	1	11/21/15 06:12	DD	SW8270D	
Dibenzofuran	ND	0.24	mg/Kg	1	11/21/15 06:12	DD	SW8270D	
Diethyl phthalate	ND	0.24	mg/Kg	1	11/21/15 06:12	DD	SW8270D	
Dimethylphthalate	ND	0.24	mg/Kg	1	11/21/15 06:12	DD	SW8270D	
Di-n-butylphthalate	ND	0.24	mg/Kg	1	11/21/15 06:12	DD	SW8270D	
Di-n-octylphthalate	ND	0.24	mg/Kg	1	11/21/15 06:12	DD	SW8270D	
Fluoranthene	0.88	0.24	mg/Kg	1	11/21/15 06:12	DD	SW8270D	
Fluorene	ND	0.24	mg/Kg	1	11/21/15 06:12	DD	SW8270D	
Hexachlorobenzene	ND	0.24	mg/Kg	1	11/21/15 06:12	DD	SW8270D	
Hexachlorobutadiene	ND	0.24	mg/Kg	1	11/21/15 06:12	DD	SW8270D	
Hexachlorocyclopentadiene	ND	0.24	mg/Kg	1	11/21/15 06:12	DD	SW8270D	
Hexachloroethane	ND	0.24	mg/Kg	1	11/21/15 06:12	DD	SW8270D	
Indeno(1,2,3-cd)pyrene	ND	0.24	mg/Kg	1	11/21/15 06:12	DD	SW8270D	
Isophorone	ND	0.24	mg/Kg	1	11/21/15 06:12	DD	SW8270D	
Naphthalene	ND	0.24	mg/Kg	1	11/21/15 06:12	DD	SW8270D	
Nitrobenzene	ND	0.24	mg/Kg	1	11/21/15 06:12	DD	SW8270D	
N-Nitrosodimethylamine	ND	0.35	mg/Kg	1	11/21/15 06:12	DD	SW8270D	
N-Nitrosodi-n-propylamine	ND	0.24	mg/Kg	1	11/21/15 06:12	DD	SW8270D	
N-Nitrosodiphenylamine	ND	0.35	mg/Kg	1	11/21/15 06:12	DD	SW8270D	
Pentachloronitrobenzene	ND	0.35	mg/Kg	1	11/21/15 06:12	DD	SW8270D	
Pentachlorophenol	ND	0.35	mg/Kg	1	11/21/15 06:12	DD	SW8270D	
Phenanthrene	0.84	0.24	mg/Kg	1	11/21/15 06:12	DD	SW8270D	
Phenol	ND	0.24	mg/Kg	1	11/21/15 06:12	DD	SW8270D	
Pyrene	0.76	0.24	mg/Kg	1	11/21/15 06:12	DD	SW8270D	
Pyridine	ND	0.35	mg/Kg	1	11/21/15 06:12	DD	SW8270D	
QA/QC Surrogates								
% 2,4,6-Tribromophenol	70		%	1	11/21/15 06:12	DD	30 - 130 %	

Project ID: 526 UNION AVE.
Client ID: SB5 0-2

Phoenix I.D.: BK26203

Parameter	Result	RL/ PQL	Units	Dilution	Date/Time	By	Reference
% 2-Fluorobiphenyl	63		%	1	11/21/15 06:12	DD	30 - 130 %
% 2-Fluorophenol	58		%	1	11/21/15 06:12	DD	30 - 130 %
% Nitrobenzene-d5	71		%	1	11/21/15 06:12	DD	30 - 130 %
% Phenol-d5	69		%	1	11/21/15 06:12	DD	30 - 130 %
% Terphenyl-d14	68		%	1	11/21/15 06:12	DD	30 - 130 %

1 = This parameter is not certified by NY NELAC for this matrix. NY NELAC does not offer certification for all parameters at this time.
B = Present in blank, no bias suspected.

RL/PQL=Reporting/Practical Quantitation Level (Equivalent to NELAC LOQ, Limit of Quanitation) ND=Not Detected BRL=Below Reporting Level
QA/QC Surrogates: Surrogates are compounds (preceeded with a %) added by the lab to determine analysis efficiency. Surrogate results(%) listed in the report are not "detected" compounds.

Comments:

Per 1.4.6 of EPA method 8270D, 1,2-Diphenylhydrazine is unstable and readily converts to Azobenzene. Azobenzene is used for the calibration of 1,2-Diphenylhydrazine.

Please be advised that the NY 375 soil criteria for chromium are based on hexavalent chromium and trivalent chromium.

Pesticide Comment:
Due to a matrix interference and/or the presence of a large amount of non-target material in the sample, an elevated RL was reported.

All soils, solids and sludges are reported on a dry weight basis unless otherwise noted in the sample comments.

If there are any questions regarding this data, please call Phoenix Client Services at extension 200.
This report must not be reproduced except in full as defined by the attached chain of custody.

Phyllis Shiller, Laboratory Director
November 25, 2015
Reviewed and Released by: Bobbi Aloisa, Vice President

PHOENIX

Environmental Laboratories, Inc.
587 East Middle Turnpike, P.O.Box 370, Manchester, CT 06045
Tel. (860) 645-1102 Fax (860) 645-0823

ACCREDITED IN ACCORDANCE WITH nelac NY # 11301

Analysis Report

November 25, 2015

FOR: Attn:
Creative Environmental Solutions
39 West 37th Street, 14th Floor
New York, NY 10018

Sample Information		Custody Information		Date	Time
Matrix:	SOIL	Collected by:		11/18/15	14:20
Location Code:	CREATENV	Received by:	LB	11/19/15	17:04
Rush Request:	72 Hour	Analyzed by:	see "By" below		
P.O.#:					

Laboratory Data

SDG ID: GBK26195
Phoenix ID: BK26204

Project ID: 526 UNION AVE.
Client ID: SB5 5-7

Parameter	Result	RL/ PQL	Units	Dilution	Date/Time	By	Reference	
Silver	< 0.36	0.36	mg/Kg	1	11/21/15 16:30	LK	SW6010C	
Aluminum	10200	55	mg/Kg	10	11/21/15 14:52	LK	SW6010C	
Arsenic	2.1	0.7	mg/Kg	1	11/21/15 16:30	LK	SW6010C	
Barium	58.1	0.36	mg/Kg	1	11/21/15 16:30	LK	SW6010C	
Beryllium	0.45	0.29	mg/Kg	1	11/21/15 16:30	LK	SW6010C	
Calcium	1230	5.5	mg/Kg	1	11/21/15 16:30	LK	SW6010C	
Cadmium	1.17	0.36	mg/Kg	1	11/21/15 16:30	LK	SW6010C	
Cobalt	7.90	0.36	mg/Kg	1	11/21/15 16:30	LK	SW6010C	
Chromium	23.1	0.36	mg/Kg	1	11/21/15 16:30	LK	SW6010C	
Copper	37.5	0.36	mg/kg	1	11/21/15 16:30	LK	SW6010C	
Iron	21400	55	mg/Kg	10	11/21/15 14:52	LK	SW6010C	
Mercury	0.61	0.03	mg/Kg	1	11/23/15 13:15	RS	SW7471B	
Potassium	1600	5.5	mg/Kg	1	11/21/15 16:30	LK	SW6010C	
Magnesium	2130	5.5	mg/Kg	1	11/21/15 16:30	LK	SW6010C	
Manganese	366	3.6	mg/Kg	10	11/21/15 14:52	LK	SW6010C	
Sodium	92.3	5.5	mg/Kg	1	11/21/15 16:30	LK	SW6010C	
Nickel	24.0	0.36	mg/Kg	1	11/21/15 16:30	LK	SW6010C	
Lead	71.0	0.36	mg/Kg	1	11/21/15 16:30	LK	SW6010C	B
Antimony	< 3.6	3.6	mg/Kg	1	11/21/15 16:30	LK	SW6010C	
Selenium	< 1.5	1.5	mg/Kg	1	11/21/15 16:30	LK	SW6010C	
Thallium	< 3.3	3.3	mg/Kg	1	11/21/15 16:30	LK	SW6010C	
Vanadium	32.7	0.36	mg/Kg	1	11/21/15 16:30	LK	SW6010C	
Zinc	487	3.6	mg/Kg	10	11/21/15 14:52	LK	SW6010C	
Percent Solid	86		%		11/20/15 01:40	W	SW846-%Solid	
Soil Extraction for PCB	Completed				11/19/15 00:00	BC	SW3545A	
Soil Extraction for Pesticide	Completed				11/19/15 00:00	BC/V	SW3545A	
Soil Extraction for SVOA	Completed				11/20/15 00:00	CB/CKV	SW3545A	
Mercury Digestion	Completed				11/21/15 00:00	W/W	SW7471B	

Project ID: 526 UNION AVE.
Client ID: SB5 5-7

Phoenix I.D.: BK26204

Parameter	Result	RL/ PQL	Units	Dilution	Date/Time	By	Reference
Total Metals Digest	Completed				11/20/15 00:00	G/AG/T	SW3050B
Field Extraction	Completed				11/18/15 14:20		SW5035A
Polychlorinated Biphenyls							
PCB-1016	ND	0.077	mg/Kg	2	11/20/15 20:21	AW	SW8082A
PCB-1221	ND	0.077	mg/Kg	2	11/20/15 20:21	AW	SW8082A
PCB-1232	ND	0.077	mg/Kg	2	11/20/15 20:21	AW	SW8082A
PCB-1242	ND	0.077	mg/Kg	2	11/20/15 20:21	AW	SW8082A
PCB-1248	ND	0.077	mg/Kg	2	11/20/15 20:21	AW	SW8082A
PCB-1254	ND	0.077	mg/Kg	2	11/20/15 20:21	AW	SW8082A
PCB-1260	ND	0.077	mg/Kg	2	11/20/15 20:21	AW	SW8082A
PCB-1262	ND	0.077	mg/Kg	2	11/20/15 20:21	AW	SW8082A
PCB-1268	ND	0.077	mg/Kg	2	11/20/15 20:21	AW	SW8082A
QA/QC Surrogates							
% DCBP	66		%	2	11/20/15 20:21	AW	30 - 150 %
% TCMX	77		%	2	11/20/15 20:21	AW	30 - 150 %
Pesticides - Soil							
4,4' -DDD	ND	0.0023	mg/Kg	2	11/20/15 22:37	CE	SW8081B
4,4' -DDE	ND	0.0023	mg/Kg	2	11/20/15 22:37	CE	SW8081B
4,4' -DDT	ND	0.0023	mg/Kg	2	11/20/15 22:37	CE	SW8081B
a-BHC	ND	0.0077	mg/Kg	2	11/20/15 22:37	CE	SW8081B
a-Chlordane	ND	0.0038	mg/Kg	2	11/20/15 22:37	CE	SW8081B
Aldrin	ND	0.0038	mg/Kg	2	11/20/15 22:37	CE	SW8081B
b-BHC	ND	0.0077	mg/Kg	2	11/20/15 22:37	CE	SW8081B
Chlordane	ND	0.038	mg/Kg	2	11/20/15 22:37	CE	SW8081B
d-BHC	ND	0.0077	mg/Kg	2	11/20/15 22:37	CE	SW8081B
Dieldrin	ND	0.0038	mg/Kg	2	11/20/15 22:37	CE	SW8081B
Endosulfan I	ND	0.0077	mg/Kg	2	11/20/15 22:37	CE	SW8081B
Endosulfan II	ND	0.0077	mg/Kg	2	11/20/15 22:37	CE	SW8081B
Endosulfan sulfate	ND	0.0077	mg/Kg	2	11/20/15 22:37	CE	SW8081B
Endrin	ND	0.0077	mg/Kg	2	11/20/15 22:37	CE	SW8081B
Endrin aldehyde	ND	0.0077	mg/Kg	2	11/20/15 22:37	CE	SW8081B
Endrin ketone	ND	0.0077	mg/Kg	2	11/20/15 22:37	CE	SW8081B
g-BHC	ND	0.0015	mg/Kg	2	11/20/15 22:37	CE	SW8081B
g-Chlordane	ND	0.0038	mg/Kg	2	11/20/15 22:37	CE	SW8081B
Heptachlor	ND	0.0077	mg/Kg	2	11/20/15 22:37	CE	SW8081B
Heptachlor epoxide	ND	0.0077	mg/Kg	2	11/20/15 22:37	CE	SW8081B
Methoxychlor	ND	0.038	mg/Kg	2	11/20/15 22:37	CE	SW8081B
Toxaphene	ND	0.15	mg/Kg	2	11/20/15 22:37	CE	SW8081B
QA/QC Surrogates							
% DCBP	80		%	2	11/20/15 22:37	CE	30 - 150 %
% TCMX	63		%	2	11/20/15 22:37	CE	30 - 150 %
Volatiles							
1,1,1,2-Tetrachloroethane	ND	0.0044	mg/Kg	1	11/21/15 02:02	JLI	SW8260C
1,1,1-Trichloroethane	ND	0.0044	mg/Kg	1	11/21/15 02:02	JLI	SW8260C
1,1,2,2-Tetrachloroethane	ND	0.0044	mg/Kg	1	11/21/15 02:02	JLI	SW8260C
1,1,2-Trichloroethane	ND	0.0044	mg/Kg	1	11/21/15 02:02	JLI	SW8260C
1,1-Dichloroethane	ND	0.0044	mg/Kg	1	11/21/15 02:02	JLI	SW8260C

Project ID: 526 UNION AVE.
Client ID: SB5 5-7

Phoenix I.D.: BK26204

Parameter	Result	RL/ PQL	Units	Dilution	Date/Time	By	Reference	
1,1-Dichloroethene	ND	0.0044	mg/Kg	1	11/21/15 02:02	JLI	SW8260C	
1,1-Dichloropropene	ND	0.0044	mg/Kg	1	11/21/15 02:02	JLI	SW8260C	
1,2,3-Trichlorobenzene	ND	0.0044	mg/Kg	1	11/21/15 02:02	JLI	SW8260C	
1,2,3-Trichloropropane	ND	0.0044	mg/Kg	1	11/21/15 02:02	JLI	SW8260C	
1,2,4-Trichlorobenzene	ND	0.0044	mg/Kg	1	11/21/15 02:02	JLI	SW8260C	
1,2,4-Trimethylbenzene	ND	0.0044	mg/Kg	1	11/21/15 02:02	JLI	SW8260C	
1,2-Dibromo-3-chloropropane	ND	0.0044	mg/Kg	1	11/21/15 02:02	JLI	SW8260C	
1,2-Dibromoethane	ND	0.0044	mg/Kg	1	11/21/15 02:02	JLI	SW8260C	
1,2-Dichlorobenzene	ND	0.0044	mg/Kg	1	11/21/15 02:02	JLI	SW8260C	
1,2-Dichloroethane	ND	0.0044	mg/Kg	1	11/21/15 02:02	JLI	SW8260C	
1,2-Dichloropropane	ND	0.0044	mg/Kg	1	11/21/15 02:02	JLI	SW8260C	
1,3,5-Trimethylbenzene	ND	0.0044	mg/Kg	1	11/21/15 02:02	JLI	SW8260C	
1,3-Dichlorobenzene	ND	0.0044	mg/Kg	1	11/21/15 02:02	JLI	SW8260C	
1,3-Dichloropropane	ND	0.0044	mg/Kg	1	11/21/15 02:02	JLI	SW8260C	
1,4-Dichlorobenzene	ND	0.0044	mg/Kg	1	11/21/15 02:02	JLI	SW8260C	
2,2-Dichloropropane	ND	0.0044	mg/Kg	1	11/21/15 02:02	JLI	SW8260C	
2-Chlorotoluene	ND	0.0044	mg/Kg	1	11/21/15 02:02	JLI	SW8260C	
2-Hexanone	ND	0.022	mg/Kg	1	11/21/15 02:02	JLI	SW8260C	
2-Isopropyltoluene	ND	0.0044	mg/Kg	1	11/21/15 02:02	JLI	SW8260C	1
4-Chlorotoluene	ND	0.0044	mg/Kg	1	11/21/15 02:02	JLI	SW8260C	
4-Methyl-2-pentanone	ND	0.022	mg/Kg	1	11/21/15 02:02	JLI	SW8260C	
Acetone	ND	0.022	mg/Kg	1	11/21/15 02:02	JLI	SW8260C	
Acrylonitrile	ND	0.0087	mg/Kg	1	11/21/15 02:02	JLI	SW8260C	
Benzene	ND	0.0044	mg/Kg	1	11/21/15 02:02	JLI	SW8260C	
Bromobenzene	ND	0.0044	mg/Kg	1	11/21/15 02:02	JLI	SW8260C	
Bromochloromethane	ND	0.0044	mg/Kg	1	11/21/15 02:02	JLI	SW8260C	
Bromodichloromethane	ND	0.0044	mg/Kg	1	11/21/15 02:02	JLI	SW8260C	
Bromoform	ND	0.0044	mg/Kg	1	11/21/15 02:02	JLI	SW8260C	
Bromomethane	ND	0.0044	mg/Kg	1	11/21/15 02:02	JLI	SW8260C	
Carbon Disulfide	ND	0.0044	mg/Kg	1	11/21/15 02:02	JLI	SW8260C	
Carbon tetrachloride	ND	0.0044	mg/Kg	1	11/21/15 02:02	JLI	SW8260C	
Chlorobenzene	ND	0.0044	mg/Kg	1	11/21/15 02:02	JLI	SW8260C	
Chloroethane	ND	0.0044	mg/Kg	1	11/21/15 02:02	JLI	SW8260C	
Chloroform	ND	0.0044	mg/Kg	1	11/21/15 02:02	JLI	SW8260C	
Chloromethane	ND	0.0044	mg/Kg	1	11/21/15 02:02	JLI	SW8260C	
cis-1,2-Dichloroethene	ND	0.0044	mg/Kg	1	11/21/15 02:02	JLI	SW8260C	
cis-1,3-Dichloropropene	ND	0.0044	mg/Kg	1	11/21/15 02:02	JLI	SW8260C	
Dibromochloromethane	ND	0.0044	mg/Kg	1	11/21/15 02:02	JLI	SW8260C	
Dibromomethane	ND	0.0044	mg/Kg	1	11/21/15 02:02	JLI	SW8260C	
Dichlorodifluoromethane	ND	0.0044	mg/Kg	1	11/21/15 02:02	JLI	SW8260C	
Ethylbenzene	ND	0.0044	mg/Kg	1	11/21/15 02:02	JLI	SW8260C	
Hexachlorobutadiene	ND	0.0044	mg/Kg	1	11/21/15 02:02	JLI	SW8260C	
Isopropylbenzene	ND	0.0044	mg/Kg	1	11/21/15 02:02	JLI	SW8260C	
m&p-Xylene	ND	0.0044	mg/Kg	1	11/21/15 02:02	JLI	SW8260C	
Methyl Ethyl Ketone	ND	0.022	mg/Kg	1	11/21/15 02:02	JLI	SW8260C	
Methyl t-butyl ether (MTBE)	ND	0.0087	mg/Kg	1	11/21/15 02:02	JLI	SW8260C	
Methylene chloride	ND	0.0087	mg/Kg	1	11/21/15 02:02	JLI	SW8260C	
Naphthalene	ND	0.0044	mg/Kg	1	11/21/15 02:02	JLI	SW8260C	
n-Butylbenzene	ND	0.0044	mg/Kg	1	11/21/15 02:02	JLI	SW8260C	

Parameter	Result	RL/ PQL	Units	Dilution	Date/Time	By	Reference	
n-Propylbenzene	ND	0.0044	mg/Kg	1	11/21/15 02:02	JLI	SW8260C	
o-Xylene	ND	0.0044	mg/Kg	1	11/21/15 02:02	JLI	SW8260C	
p-Isopropyltoluene	ND	0.0044	mg/Kg	1	11/21/15 02:02	JLI	SW8260C	
sec-Butylbenzene	ND	0.0044	mg/Kg	1	11/21/15 02:02	JLI	SW8260C	
Styrene	ND	0.0044	mg/Kg	1	11/21/15 02:02	JLI	SW8260C	
tert-Butylbenzene	ND	0.0044	mg/Kg	1	11/21/15 02:02	JLI	SW8260C	
Tetrachloroethene	ND	0.0044	mg/Kg	1	11/21/15 02:02	JLI	SW8260C	
Tetrahydrofuran (THF)	ND	0.0087	mg/Kg	1	11/21/15 02:02	JLI	SW8260C	1
Toluene	ND	0.0044	mg/Kg	1	11/21/15 02:02	JLI	SW8260C	
Total Xylenes	ND	0.0044	mg/Kg	1	11/21/15 02:02	JLI	SW8260C	
trans-1,2-Dichloroethene	ND	0.0044	mg/Kg	1	11/21/15 02:02	JLI	SW8260C	
trans-1,3-Dichloropropene	ND	0.0044	mg/Kg	1	11/21/15 02:02	JLI	SW8260C	
trans-1,4-dichloro-2-butene	ND	0.0087	mg/Kg	1	11/21/15 02:02	JLI	SW8260C	
Trichloroethene	ND	0.0044	mg/Kg	1	11/21/15 02:02	JLI	SW8260C	
Trichlorofluoromethane	ND	0.0044	mg/Kg	1	11/21/15 02:02	JLI	SW8260C	
Trichlorotrifluoroethane	ND	0.0044	mg/Kg	1	11/21/15 02:02	JLI	SW8260C	
Vinyl chloride	ND	0.0044	mg/Kg	1	11/21/15 02:02	JLI	SW8260C	
QA/QC Surrogates								
% 1,2-dichlorobenzene-d4	95		%	1	11/21/15 02:02	JLI	70 - 130 %	
% Bromofluorobenzene	99		%	1	11/21/15 02:02	JLI	70 - 130 %	
% Dibromofluoromethane	91		%	1	11/21/15 02:02	JLI	70 - 130 %	
% Toluene-d8	90		%	1	11/21/15 02:02	JLI	70 - 130 %	

Semivolatiles

1,2,4,5-Tetrachlorobenzene	ND	0.27	mg/Kg	1	11/21/15 06:35	DD	SW8270D
1,2,4-Trichlorobenzene	ND	0.27	mg/Kg	1	11/21/15 06:35	DD	SW8270D
1,2-Dichlorobenzene	ND	0.27	mg/Kg	1	11/21/15 06:35	DD	SW8270D
1,2-Diphenylhydrazine	ND	0.38	mg/Kg	1	11/21/15 06:35	DD	SW8270D
1,3-Dichlorobenzene	ND	0.27	mg/Kg	1	11/21/15 06:35	DD	SW8270D
1,4-Dichlorobenzene	ND	0.27	mg/Kg	1	11/21/15 06:35	DD	SW8270D
2,4,5-Trichlorophenol	ND	0.27	mg/Kg	1	11/21/15 06:35	DD	SW8270D
2,4,6-Trichlorophenol	ND	0.27	mg/Kg	1	11/21/15 06:35	DD	SW8270D
2,4-Dichlorophenol	ND	0.27	mg/Kg	1	11/21/15 06:35	DD	SW8270D
2,4-Dimethylphenol	ND	0.27	mg/Kg	1	11/21/15 06:35	DD	SW8270D
2,4-Dinitrophenol	ND	0.61	mg/Kg	1	11/21/15 06:35	DD	SW8270D
2,4-Dinitrotoluene	ND	0.27	mg/Kg	1	11/21/15 06:35	DD	SW8270D
2,6-Dinitrotoluene	ND	0.27	mg/Kg	1	11/21/15 06:35	DD	SW8270D
2-Chloronaphthalene	ND	0.27	mg/Kg	1	11/21/15 06:35	DD	SW8270D
2-Chlorophenol	ND	0.27	mg/Kg	1	11/21/15 06:35	DD	SW8270D
2-Methylnaphthalene	ND	0.27	mg/Kg	1	11/21/15 06:35	DD	SW8270D
2-Methylphenol (o-cresol)	ND	0.27	mg/Kg	1	11/21/15 06:35	DD	SW8270D
2-Nitroaniline	ND	0.61	mg/Kg	1	11/21/15 06:35	DD	SW8270D
2-Nitrophenol	ND	0.27	mg/Kg	1	11/21/15 06:35	DD	SW8270D
3&4-Methylphenol (m&p-cresol)	ND	0.38	mg/Kg	1	11/21/15 06:35	DD	SW8270D
3,3'-Dichlorobenzidine	ND	0.27	mg/Kg	1	11/21/15 06:35	DD	SW8270D
3-Nitroaniline	ND	0.61	mg/Kg	1	11/21/15 06:35	DD	SW8270D
4,6-Dinitro-2-methylphenol	ND	1.1	mg/Kg	1	11/21/15 06:35	DD	SW8270D
4-Bromophenyl phenyl ether	ND	0.38	mg/Kg	1	11/21/15 06:35	DD	SW8270D
4-Chloro-3-methylphenol	ND	0.27	mg/Kg	1	11/21/15 06:35	DD	SW8270D
4-Chloroaniline	ND	0.27	mg/Kg	1	11/21/15 06:35	DD	SW8270D

Project ID: 526 UNION AVE.
Client ID: SB5 5-7

Phoenix I.D.: BK26204

Parameter	Result	RL/ PQL	Units	Dilution	Date/Time	By	Reference	
4-Chlorophenyl phenyl ether	ND	0.27	mg/Kg	1	11/21/15 06:35	DD	SW8270D	
4-Nitroaniline	ND	0.61	mg/Kg	1	11/21/15 06:35	DD	SW8270D	
4-Nitrophenol	ND	1.1	mg/Kg	1	11/21/15 06:35	DD	SW8270D	
Acenaphthene	ND	0.27	mg/Kg	1	11/21/15 06:35	DD	SW8270D	
Acenaphthylene	ND	0.27	mg/Kg	1	11/21/15 06:35	DD	SW8270D	
Acetophenone	ND	0.27	mg/Kg	1	11/21/15 06:35	DD	SW8270D	
Aniline	ND	1.1	mg/Kg	1	11/21/15 06:35	DD	SW8270D	
Anthracene	ND	0.27	mg/Kg	1	11/21/15 06:35	DD	SW8270D	
Benz(a)anthracene	ND	0.27	mg/Kg	1	11/21/15 06:35	DD	SW8270D	
Benzidine	ND	0.46	mg/Kg	1	11/21/15 06:35	DD	SW8270D	
Benzo(a)pyrene	ND	0.27	mg/Kg	1	11/21/15 06:35	DD	SW8270D	
Benzo(b)fluoranthene	ND	0.27	mg/Kg	1	11/21/15 06:35	DD	SW8270D	
Benzo(ghi)perylene	ND	0.27	mg/Kg	1	11/21/15 06:35	DD	SW8270D	
Benzo(k)fluoranthene	ND	0.27	mg/Kg	1	11/21/15 06:35	DD	SW8270D	
Benzoic acid	ND	1.1	mg/Kg	1	11/21/15 06:35	DD	SW8270D	1
Benzyl butyl phthalate	ND	0.27	mg/Kg	1	11/21/15 06:35	DD	SW8270D	
Bis(2-chloroethoxy)methane	ND	0.27	mg/Kg	1	11/21/15 06:35	DD	SW8270D	
Bis(2-chloroethyl)ether	ND	0.38	mg/Kg	1	11/21/15 06:35	DD	SW8270D	
Bis(2-chloroisopropyl)ether	ND	0.27	mg/Kg	1	11/21/15 06:35	DD	SW8270D	
Bis(2-ethylhexyl)phthalate	ND	0.27	mg/Kg	1	11/21/15 06:35	DD	SW8270D	
Carbazole	ND	0.57	mg/Kg	1	11/21/15 06:35	DD	SW8270D	
Chrysene	ND	0.27	mg/Kg	1	11/21/15 06:35	DD	SW8270D	
Dibenz(a,h)anthracene	ND	0.27	mg/Kg	1	11/21/15 06:35	DD	SW8270D	
Dibenzofuran	ND	0.27	mg/Kg	1	11/21/15 06:35	DD	SW8270D	
Diethyl phthalate	ND	0.27	mg/Kg	1	11/21/15 06:35	DD	SW8270D	
Dimethylphthalate	ND	0.27	mg/Kg	1	11/21/15 06:35	DD	SW8270D	
Di-n-butylphthalate	ND	0.27	mg/Kg	1	11/21/15 06:35	DD	SW8270D	
Di-n-octylphthalate	ND	0.27	mg/Kg	1	11/21/15 06:35	DD	SW8270D	
Fluoranthene	ND	0.27	mg/Kg	1	11/21/15 06:35	DD	SW8270D	
Fluorene	ND	0.27	mg/Kg	1	11/21/15 06:35	DD	SW8270D	
Hexachlorobenzene	ND	0.27	mg/Kg	1	11/21/15 06:35	DD	SW8270D	
Hexachlorobutadiene	ND	0.27	mg/Kg	1	11/21/15 06:35	DD	SW8270D	
Hexachlorocyclopentadiene	ND	0.27	mg/Kg	1	11/21/15 06:35	DD	SW8270D	
Hexachloroethane	ND	0.27	mg/Kg	1	11/21/15 06:35	DD	SW8270D	
Indeno(1,2,3-cd)pyrene	ND	0.27	mg/Kg	1	11/21/15 06:35	DD	SW8270D	
Isophorone	ND	0.27	mg/Kg	1	11/21/15 06:35	DD	SW8270D	
Naphthalene	ND	0.27	mg/Kg	1	11/21/15 06:35	DD	SW8270D	
Nitrobenzene	ND	0.27	mg/Kg	1	11/21/15 06:35	DD	SW8270D	
N-Nitrosodimethylamine	ND	0.38	mg/Kg	1	11/21/15 06:35	DD	SW8270D	
N-Nitrosodi-n-propylamine	ND	0.27	mg/Kg	1	11/21/15 06:35	DD	SW8270D	
N-Nitrosodiphenylamine	ND	0.38	mg/Kg	1	11/21/15 06:35	DD	SW8270D	
Pentachloronitrobenzene	ND	0.38	mg/Kg	1	11/21/15 06:35	DD	SW8270D	
Pentachlorophenol	ND	0.38	mg/Kg	1	11/21/15 06:35	DD	SW8270D	
Phenanthrene	ND	0.27	mg/Kg	1	11/21/15 06:35	DD	SW8270D	
Phenol	ND	0.27	mg/Kg	1	11/21/15 06:35	DD	SW8270D	
Pyrene	ND	0.27	mg/Kg	1	11/21/15 06:35	DD	SW8270D	
Pyridine	ND	0.38	mg/Kg	1	11/21/15 06:35	DD	SW8270D	
QA/QC Surrogates								
% 2,4,6-Tribromophenol	57		%	1	11/21/15 06:35	DD	30 - 130 %	

Project ID: 526 UNION AVE.
Client ID: SB5 5-7

Phoenix I.D.: BK26204

Parameter	Result	RL/ PQL	Units	Dilution	Date/Time	By	Reference
% 2-Fluorobiphenyl	57		%	1	11/21/15 06:35	DD	30 - 130 %
% 2-Fluorophenol	43		%	1	11/21/15 06:35	DD	30 - 130 %
% Nitrobenzene-d5	50		%	1	11/21/15 06:35	DD	30 - 130 %
% Phenol-d5	53		%	1	11/21/15 06:35	DD	30 - 130 %
% Terphenyl-d14	50		%	1	11/21/15 06:35	DD	30 - 130 %

1 = This parameter is not certified by NY NELAC for this matrix. NY NELAC does not offer certification for all parameters at this time.
B = Present in blank, no bias suspected.

RL/PQL=Reporting/Practical Quantitation Level (Equivalent to NELAC LOQ, Limit of Quanitation) ND=Not Detected BRL=Below Reporting Level
QA/QC Surrogates: Surrogates are compounds (preceeded with a %) added by the lab to determine analysis efficiency. Surrogate results(%) listed in the report are not "detected" compounds.

Comments:

Per 1.4.6 of EPA method 8270D, 1,2-Diphenylhydrazine is unstable and readily converts to Azobenzene. Azobenzene is used for the calibration of 1,2-Diphenylhydrazine.

Please be advised that the NY 375 soil criteria for chromium are based on hexavalent chromium and trivalent chromium.

All soils, solids and sludges are reported on a dry weight basis unless otherwise noted in the sample comments.

If there are any questions regarding this data, please call Phoenix Client Services at extension 200.
This report must not be reproduced except in full as defined by the attached chain of custody.

Phyllis Shiller, Laboratory Director
November 25, 2015
Reviewed and Released by: Bobbi Aloisa, Vice President

PHOENIX

Environmental Laboratories, Inc.
587 East Middle Turnpike, P.O.Box 370, Manchester, CT 06045
Tel. (860) 645-1102 Fax (860) 645-0823

ACCREDITED IN ACCORDANCE WITH nelac NY # 11301

Analysis Report

November 25, 2015

FOR: Attn:
Creative Environmental Solutions
39 West 37th Street, 14th Floor
New York, NY 10018

Sample Information		Custody Information		Date	Time
Matrix:	SOIL	Collected by:		11/18/15	15:00
Location Code:	CREATENV	Received by:	LB	11/19/15	17:04
Rush Request:	72 Hour	Analyzed by:	see "By" below		
P.O.#:					

Laboratory Data

SDG ID: GBK26195
Phoenix ID: BK26205

Project ID: 526 UNION AVE.
Client ID: SBX 0-2

Parameter	Result	RL/ PQL	Units	Dilution	Date/Time	By	Reference	
Silver	0.56	0.36	mg/Kg	1	11/21/15 16:33	LK	SW6010C	
Aluminum	6460	54	mg/Kg	10	11/21/15 14:55	LK	SW6010C	
Arsenic	11.2	0.7	mg/Kg	1	11/21/15 16:33	LK	SW6010C	
Barium	220	0.36	mg/Kg	1	11/21/15 16:33	LK	SW6010C	
Beryllium	0.33	0.29	mg/Kg	1	11/21/15 16:33	LK	SW6010C	
Calcium	67800	54	mg/Kg	10	11/21/15 14:55	LK	SW6010C	
Cadmium	4.27	0.36	mg/Kg	1	11/21/15 16:33	LK	SW6010C	
Cobalt	8.51	0.36	mg/Kg	1	11/21/15 16:33	LK	SW6010C	
Chromium	33.1	0.36	mg/Kg	1	11/21/15 16:33	LK	SW6010C	
Copper	219	3.6	mg/kg	10	11/21/15 14:55	LK	SW6010C	
Iron	43800	54	mg/Kg	10	11/21/15 14:55	LK	SW6010C	
Mercury	1.39	0.03	mg/Kg	1	11/23/15 13:17	RS	SW7471B	
Potassium	933	54	mg/Kg	10	11/21/15 14:55	LK	SW6010C	
Magnesium	32000	54	mg/Kg	10	11/21/15 14:55	LK	SW6010C	
Manganese	439	3.6	mg/Kg	10	11/21/15 14:55	LK	SW6010C	
Sodium	755	5.4	mg/Kg	1	11/21/15 16:33	LK	SW6010C	
Nickel	29.9	0.36	mg/Kg	1	11/21/15 16:33	LK	SW6010C	
Lead	904	3.6	mg/Kg	10	11/21/15 14:55	LK	SW6010C	B
Antimony	< 3.6	3.6	mg/Kg	1	11/21/15 16:33	LK	SW6010C	
Selenium	< 1.4	1.4	mg/Kg	1	11/21/15 16:33	LK	SW6010C	
Thallium	< 3.2	3.2	mg/Kg	1	11/21/15 16:33	LK	SW6010C	
Vanadium	52.8	0.36	mg/Kg	1	11/21/15 16:33	LK	SW6010C	
Zinc	885	3.6	mg/Kg	10	11/21/15 14:55	LK	SW6010C	
Percent Solid	89		%		11/20/15 01:40	W	SW846-%Solid	
Soil Extraction for PCB	Completed				11/19/15 00:00	BC	SW3545A	
Soil Extraction for Pesticide	Completed				11/19/15 00:00	BC/V	SW3545A	
Soil Extraction for SVOA	Completed				11/20/15 00:00	CB/CKV	SW3545A	
Mercury Digestion	Completed				11/21/15 00:00	W/W	SW7471B	

Parameter	Result	RL/ PQL	Units	Dilution	Date/Time	By	Reference
Total Metals Digest	Completed				11/20/15 00:00	G/AG/T	SW3050B
Field Extraction	Completed				11/18/15 15:00		SW5035A
Polychlorinated Biphenyls							
PCB-1016	ND	0.37	mg/Kg	10	11/20/15 19:42	AW	SW8082A
PCB-1221	ND	0.37	mg/Kg	10	11/20/15 19:42	AW	SW8082A
PCB-1232	ND	0.37	mg/Kg	10	11/20/15 19:42	AW	SW8082A
PCB-1242	ND	0.37	mg/Kg	10	11/20/15 19:42	AW	SW8082A
PCB-1248	*	0.37	mg/Kg	10	11/20/15 19:42	AW	SW8082A
PCB-1254	*	0.37	mg/Kg	10	11/20/15 19:42	AW	SW8082A
PCB-1260	*	0.37	mg/Kg	10	11/20/15 19:42	AW	SW8082A
PCB-1262	ND	0.37	mg/Kg	10	11/20/15 19:42	AW	SW8082A
PCB-1268	ND	0.37	mg/Kg	10	11/20/15 19:42	AW	SW8082A
Total PCBs	2	0.37	mg/Kg	10	11/20/15 19:42	AW	SW8082A
QA/QC Surrogates							
% DCBP	101		%	10	11/20/15 19:42	AW	30 - 150 %
% TCMX	102		%	10	11/20/15 19:42	AW	30 - 150 %
Pesticides - Soil							
4,4' -DDD	ND	0.022	mg/Kg	20	11/24/15 14:22	CE	SW8081B
4,4' -DDE	ND	0.019	mg/Kg	20	11/24/15 14:22	CE	SW8081B
4,4' -DDT	ND	0.022	mg/Kg	20	11/24/15 14:22	CE	SW8081B
a-BHC	ND	0.019	mg/Kg	20	11/24/15 14:22	CE	SW8081B
a-Chlordane	ND	0.037	mg/Kg	20	11/24/15 14:22	CE	SW8081B
Aldrin	ND	0.011	mg/Kg	20	11/24/15 14:22	CE	SW8081B
b-BHC	ND	0.019	mg/Kg	20	11/24/15 14:22	CE	SW8081B
Chlordane	ND	0.37	mg/Kg	20	11/24/15 14:22	CE	SW8081B
d-BHC	ND	0.037	mg/Kg	20	11/24/15 14:22	CE	SW8081B
Dieldrin	ND	0.022	mg/Kg	20	11/24/15 14:22	CE	SW8081B
Endosulfan I	ND	0.074	mg/Kg	20	11/24/15 14:22	CE	SW8081B
Endosulfan II	ND	0.074	mg/Kg	20	11/24/15 14:22	CE	SW8081B
Endosulfan sulfate	ND	0.074	mg/Kg	20	11/24/15 14:22	CE	SW8081B
Endrin	ND	0.037	mg/Kg	20	11/24/15 14:22	CE	SW8081B
Endrin aldehyde	ND	0.074	mg/Kg	20	11/24/15 14:22	CE	SW8081B
Endrin ketone	ND	0.074	mg/Kg	20	11/24/15 14:22	CE	SW8081B
g-BHC	ND	0.015	mg/Kg	20	11/24/15 14:22	CE	SW8081B
g-Chlordane	ND	0.037	mg/Kg	20	11/24/15 14:22	CE	SW8081B
Heptachlor	ND	0.037	mg/Kg	20	11/24/15 14:22	CE	SW8081B
Heptachlor epoxide	ND	0.074	mg/Kg	20	11/24/15 14:22	CE	SW8081B
Methoxychlor	ND	0.37	mg/Kg	20	11/24/15 14:22	CE	SW8081B
Toxaphene	ND	1.5	mg/Kg	20	11/24/15 14:22	CE	SW8081B
QA/QC Surrogates							
% DCBP	77		%	20	11/24/15 14:22	CE	30 - 150 %
% TCMX	72		%	20	11/24/15 14:22	CE	30 - 150 %
Volatiles							
1,1,1,2-Tetrachloroethane	ND	0.0052	mg/Kg	1	11/21/15 02:22	JLI	SW8260C
1,1,1-Trichloroethane	ND	0.0052	mg/Kg	1	11/21/15 02:22	JLI	SW8260C
1,1,2,2-Tetrachloroethane	ND	0.0052	mg/Kg	1	11/21/15 02:22	JLI	SW8260C
1,1,2-Trichloroethane	ND	0.0052	mg/Kg	1	11/21/15 02:22	JLI	SW8260C

Project ID: 526 UNION AVE.
Client ID: SBX 0-2

Phoenix I.D.: BK26205

Parameter	Result	RL/ PQL	Units	Dilution	Date/Time	By	Reference	
1,1-Dichloroethane	ND	0.0052	mg/Kg	1	11/21/15 02:22	JLI	SW8260C	
1,1-Dichloroethene	ND	0.0052	mg/Kg	1	11/21/15 02:22	JLI	SW8260C	
1,1-Dichloropropene	ND	0.0052	mg/Kg	1	11/21/15 02:22	JLI	SW8260C	
1,2,3-Trichlorobenzene	ND	0.0052	mg/Kg	1	11/21/15 02:22	JLI	SW8260C	
1,2,3-Trichloropropane	ND	0.0052	mg/Kg	1	11/21/15 02:22	JLI	SW8260C	
1,2,4-Trichlorobenzene	ND	0.0052	mg/Kg	1	11/21/15 02:22	JLI	SW8260C	
1,2,4-Trimethylbenzene	ND	0.0052	mg/Kg	1	11/21/15 02:22	JLI	SW8260C	
1,2-Dibromo-3-chloropropane	ND	0.0052	mg/Kg	1	11/21/15 02:22	JLI	SW8260C	
1,2-Dibromoethane	ND	0.0052	mg/Kg	1	11/21/15 02:22	JLI	SW8260C	
1,2-Dichlorobenzene	ND	0.0052	mg/Kg	1	11/21/15 02:22	JLI	SW8260C	
1,2-Dichloroethane	ND	0.0052	mg/Kg	1	11/21/15 02:22	JLI	SW8260C	
1,2-Dichloropropane	ND	0.0052	mg/Kg	1	11/21/15 02:22	JLI	SW8260C	
1,3,5-Trimethylbenzene	ND	0.0052	mg/Kg	1	11/21/15 02:22	JLI	SW8260C	
1,3-Dichlorobenzene	ND	0.0052	mg/Kg	1	11/21/15 02:22	JLI	SW8260C	
1,3-Dichloropropane	ND	0.0052	mg/Kg	1	11/21/15 02:22	JLI	SW8260C	
1,4-Dichlorobenzene	ND	0.0052	mg/Kg	1	11/21/15 02:22	JLI	SW8260C	
2,2-Dichloropropane	ND	0.0052	mg/Kg	1	11/21/15 02:22	JLI	SW8260C	
2-Chlorotoluene	ND	0.0052	mg/Kg	1	11/21/15 02:22	JLI	SW8260C	
2-Hexanone	ND	0.026	mg/Kg	1	11/21/15 02:22	JLI	SW8260C	
2-Isopropyltoluene	ND	0.0052	mg/Kg	1	11/21/15 02:22	JLI	SW8260C	1
4-Chlorotoluene	ND	0.0052	mg/Kg	1	11/21/15 02:22	JLI	SW8260C	
4-Methyl-2-pentanone	ND	0.026	mg/Kg	1	11/21/15 02:22	JLI	SW8260C	
Acetone	ND	0.026	mg/Kg	1	11/21/15 02:22	JLI	SW8260C	
Acrylonitrile	ND	0.01	mg/Kg	1	11/21/15 02:22	JLI	SW8260C	
Benzene	ND	0.0052	mg/Kg	1	11/21/15 02:22	JLI	SW8260C	
Bromobenzene	ND	0.0052	mg/Kg	1	11/21/15 02:22	JLI	SW8260C	
Bromochloromethane	ND	0.0052	mg/Kg	1	11/21/15 02:22	JLI	SW8260C	
Bromodichloromethane	ND	0.0052	mg/Kg	1	11/21/15 02:22	JLI	SW8260C	
Bromoform	ND	0.0052	mg/Kg	1	11/21/15 02:22	JLI	SW8260C	
Bromomethane	ND	0.0052	mg/Kg	1	11/21/15 02:22	JLI	SW8260C	
Carbon Disulfide	ND	0.0052	mg/Kg	1	11/21/15 02:22	JLI	SW8260C	
Carbon tetrachloride	ND	0.0052	mg/Kg	1	11/21/15 02:22	JLI	SW8260C	
Chlorobenzene	ND	0.0052	mg/Kg	1	11/21/15 02:22	JLI	SW8260C	
Chloroethane	ND	0.0052	mg/Kg	1	11/21/15 02:22	JLI	SW8260C	
Chloroform	ND	0.0052	mg/Kg	1	11/21/15 02:22	JLI	SW8260C	
Chloromethane	ND	0.0052	mg/Kg	1	11/21/15 02:22	JLI	SW8260C	
cis-1,2-Dichloroethene	ND	0.0052	mg/Kg	1	11/21/15 02:22	JLI	SW8260C	
cis-1,3-Dichloropropene	ND	0.0052	mg/Kg	1	11/21/15 02:22	JLI	SW8260C	
Dibromochloromethane	ND	0.0052	mg/Kg	1	11/21/15 02:22	JLI	SW8260C	
Dibromomethane	ND	0.0052	mg/Kg	1	11/21/15 02:22	JLI	SW8260C	
Dichlorodifluoromethane	ND	0.0052	mg/Kg	1	11/21/15 02:22	JLI	SW8260C	
Ethylbenzene	ND	0.0052	mg/Kg	1	11/21/15 02:22	JLI	SW8260C	
Hexachlorobutadiene	ND	0.0052	mg/Kg	1	11/21/15 02:22	JLI	SW8260C	
Isopropylbenzene	ND	0.0052	mg/Kg	1	11/21/15 02:22	JLI	SW8260C	
m&p-Xylene	ND	0.0052	mg/Kg	1	11/21/15 02:22	JLI	SW8260C	
Methyl Ethyl Ketone	ND	0.026	mg/Kg	1	11/21/15 02:22	JLI	SW8260C	
Methyl t-butyl ether (MTBE)	ND	0.01	mg/Kg	1	11/21/15 02:22	JLI	SW8260C	
Methylene chloride	ND	0.01	mg/Kg	1	11/21/15 02:22	JLI	SW8260C	
Naphthalene	ND	0.0052	mg/Kg	1	11/21/15 02:22	JLI	SW8260C	

Parameter	Result	RL/ PQL	Units	Dilution	Date/Time	By	Reference	
n-Butylbenzene	ND	0.0052	mg/Kg	1	11/21/15 02:22	JLI	SW8260C	
n-Propylbenzene	ND	0.0052	mg/Kg	1	11/21/15 02:22	JLI	SW8260C	
o-Xylene	ND	0.0052	mg/Kg	1	11/21/15 02:22	JLI	SW8260C	
p-Isopropyltoluene	ND	0.0052	mg/Kg	1	11/21/15 02:22	JLI	SW8260C	
sec-Butylbenzene	ND	0.0052	mg/Kg	1	11/21/15 02:22	JLI	SW8260C	
Styrene	ND	0.0052	mg/Kg	1	11/21/15 02:22	JLI	SW8260C	
tert-Butylbenzene	ND	0.0052	mg/Kg	1	11/21/15 02:22	JLI	SW8260C	
Tetrachloroethene	ND	0.0052	mg/Kg	1	11/21/15 02:22	JLI	SW8260C	
Tetrahydrofuran (THF)	ND	0.01	mg/Kg	1	11/21/15 02:22	JLI	SW8260C	1
Toluene	ND	0.0052	mg/Kg	1	11/21/15 02:22	JLI	SW8260C	
Total Xylenes	ND	0.0052	mg/Kg	1	11/21/15 02:22	JLI	SW8260C	
trans-1,2-Dichloroethene	ND	0.0052	mg/Kg	1	11/21/15 02:22	JLI	SW8260C	
trans-1,3-Dichloropropene	ND	0.0052	mg/Kg	1	11/21/15 02:22	JLI	SW8260C	
trans-1,4-dichloro-2-butene	ND	0.01	mg/Kg	1	11/21/15 02:22	JLI	SW8260C	
Trichloroethene	ND	0.0052	mg/Kg	1	11/21/15 02:22	JLI	SW8260C	
Trichlorofluoromethane	ND	0.0052	mg/Kg	1	11/21/15 02:22	JLI	SW8260C	
Trichlorotrifluoroethane	ND	0.0052	mg/Kg	1	11/21/15 02:22	JLI	SW8260C	
Vinyl chloride	ND	0.0052	mg/Kg	1	11/21/15 02:22	JLI	SW8260C	
QA/QC Surrogates								
% 1,2-dichlorobenzene-d4	95		%	1	11/21/15 02:22	JLI	70 - 130 %	
% Bromofluorobenzene	98		%	1	11/21/15 02:22	JLI	70 - 130 %	
% Dibromofluoromethane	95		%	1	11/21/15 02:22	JLI	70 - 130 %	
% Toluene-d8	91		%	1	11/21/15 02:22	JLI	70 - 130 %	

Semivolatiles

1,2,4,5-Tetrachlorobenzene	ND	0.26	mg/Kg	1	11/21/15 06:58	DD	SW8270D
1,2,4-Trichlorobenzene	ND	0.26	mg/Kg	1	11/21/15 06:58	DD	SW8270D
1,2-Dichlorobenzene	ND	0.26	mg/Kg	1	11/21/15 06:58	DD	SW8270D
1,2-Diphenylhydrazine	ND	0.37	mg/Kg	1	11/21/15 06:58	DD	SW8270D
1,3-Dichlorobenzene	ND	0.26	mg/Kg	1	11/21/15 06:58	DD	SW8270D
1,4-Dichlorobenzene	ND	0.26	mg/Kg	1	11/21/15 06:58	DD	SW8270D
2,4,5-Trichlorophenol	ND	0.26	mg/Kg	1	11/21/15 06:58	DD	SW8270D
2,4,6-Trichlorophenol	ND	0.26	mg/Kg	1	11/21/15 06:58	DD	SW8270D
2,4-Dichlorophenol	ND	0.26	mg/Kg	1	11/21/15 06:58	DD	SW8270D
2,4-Dimethylphenol	ND	0.26	mg/Kg	1	11/21/15 06:58	DD	SW8270D
2,4-Dinitrophenol	ND	0.59	mg/Kg	1	11/21/15 06:58	DD	SW8270D
2,4-Dinitrotoluene	ND	0.26	mg/Kg	1	11/21/15 06:58	DD	SW8270D
2,6-Dinitrotoluene	ND	0.26	mg/Kg	1	11/21/15 06:58	DD	SW8270D
2-Chloronaphthalene	ND	0.26	mg/Kg	1	11/21/15 06:58	DD	SW8270D
2-Chlorophenol	ND	0.26	mg/Kg	1	11/21/15 06:58	DD	SW8270D
2-Methylnaphthalene	ND	0.26	mg/Kg	1	11/21/15 06:58	DD	SW8270D
2-Methylphenol (o-cresol)	ND	0.26	mg/Kg	1	11/21/15 06:58	DD	SW8270D
2-Nitroaniline	ND	0.59	mg/Kg	1	11/21/15 06:58	DD	SW8270D
2-Nitrophenol	ND	0.26	mg/Kg	1	11/21/15 06:58	DD	SW8270D
3&4-Methylphenol (m&p-cresol)	ND	0.37	mg/Kg	1	11/21/15 06:58	DD	SW8270D
3,3'-Dichlorobenzidine	ND	0.26	mg/Kg	1	11/21/15 06:58	DD	SW8270D
3-Nitroaniline	ND	0.59	mg/Kg	1	11/21/15 06:58	DD	SW8270D
4,6-Dinitro-2-methylphenol	ND	1.1	mg/Kg	1	11/21/15 06:58	DD	SW8270D
4-Bromophenyl phenyl ether	ND	0.37	mg/Kg	1	11/21/15 06:58	DD	SW8270D
4-Chloro-3-methylphenol	ND	0.26	mg/Kg	1	11/21/15 06:58	DD	SW8270D

Project ID: 526 UNION AVE.
Client ID: SBX 0-2

Phoenix I.D.: BK26205

Parameter	Result	RL/ PQL	Units	Dilution	Date/Time	By	Reference	
4-Chloroaniline	ND	0.26	mg/Kg	1	11/21/15 06:58	DD	SW8270D	
4-Chlorophenyl phenyl ether	ND	0.26	mg/Kg	1	11/21/15 06:58	DD	SW8270D	
4-Nitroaniline	ND	0.59	mg/Kg	1	11/21/15 06:58	DD	SW8270D	
4-Nitrophenol	ND	1.1	mg/Kg	1	11/21/15 06:58	DD	SW8270D	
Acenaphthene	ND	0.26	mg/Kg	1	11/21/15 06:58	DD	SW8270D	
Acenaphthylene	ND	0.26	mg/Kg	1	11/21/15 06:58	DD	SW8270D	
Acetophenone	ND	0.26	mg/Kg	1	11/21/15 06:58	DD	SW8270D	
Aniline	ND	1.1	mg/Kg	1	11/21/15 06:58	DD	SW8270D	
Anthracene	ND	0.26	mg/Kg	1	11/21/15 06:58	DD	SW8270D	
Benz(a)anthracene	0.49	0.26	mg/Kg	1	11/21/15 06:58	DD	SW8270D	
Benzidine	ND	0.44	mg/Kg	1	11/21/15 06:58	DD	SW8270D	
Benzo(a)pyrene	0.45	0.26	mg/Kg	1	11/21/15 06:58	DD	SW8270D	
Benzo(b)fluoranthene	0.35	0.26	mg/Kg	1	11/21/15 06:58	DD	SW8270D	
Benzo(ghi)perylene	0.31	0.26	mg/Kg	1	11/21/15 06:58	DD	SW8270D	
Benzo(k)fluoranthene	0.53	0.26	mg/Kg	1	11/21/15 06:58	DD	SW8270D	
Benzoic acid	ND	1.1	mg/Kg	1	11/21/15 06:58	DD	SW8270D	1
Benzyl butyl phthalate	ND	0.26	mg/Kg	1	11/21/15 06:58	DD	SW8270D	
Bis(2-chloroethoxy)methane	ND	0.26	mg/Kg	1	11/21/15 06:58	DD	SW8270D	
Bis(2-chloroethyl)ether	ND	0.37	mg/Kg	1	11/21/15 06:58	DD	SW8270D	
Bis(2-chloroisopropyl)ether	ND	0.26	mg/Kg	1	11/21/15 06:58	DD	SW8270D	
Bis(2-ethylhexyl)phthalate	ND	0.26	mg/Kg	1	11/21/15 06:58	DD	SW8270D	
Carbazole	ND	0.56	mg/Kg	1	11/21/15 06:58	DD	SW8270D	
Chrysene	0.64	0.26	mg/Kg	1	11/21/15 06:58	DD	SW8270D	
Dibenz(a,h)anthracene	ND	0.26	mg/Kg	1	11/21/15 06:58	DD	SW8270D	
Dibenzofuran	ND	0.26	mg/Kg	1	11/21/15 06:58	DD	SW8270D	
Diethyl phthalate	ND	0.26	mg/Kg	1	11/21/15 06:58	DD	SW8270D	
Dimethylphthalate	ND	0.26	mg/Kg	1	11/21/15 06:58	DD	SW8270D	
Di-n-butylphthalate	ND	0.26	mg/Kg	1	11/21/15 06:58	DD	SW8270D	
Di-n-octylphthalate	ND	0.26	mg/Kg	1	11/21/15 06:58	DD	SW8270D	
Fluoranthene	0.97	0.26	mg/Kg	1	11/21/15 06:58	DD	SW8270D	
Fluorene	ND	0.26	mg/Kg	1	11/21/15 06:58	DD	SW8270D	
Hexachlorobenzene	ND	0.26	mg/Kg	1	11/21/15 06:58	DD	SW8270D	
Hexachlorobutadiene	ND	0.26	mg/Kg	1	11/21/15 06:58	DD	SW8270D	
Hexachlorocyclopentadiene	ND	0.26	mg/Kg	1	11/21/15 06:58	DD	SW8270D	
Hexachloroethane	ND	0.26	mg/Kg	1	11/21/15 06:58	DD	SW8270D	
Indeno(1,2,3-cd)pyrene	0.27	0.26	mg/Kg	1	11/21/15 06:58	DD	SW8270D	
Isophorone	ND	0.26	mg/Kg	1	11/21/15 06:58	DD	SW8270D	
Naphthalene	ND	0.26	mg/Kg	1	11/21/15 06:58	DD	SW8270D	
Nitrobenzene	ND	0.26	mg/Kg	1	11/21/15 06:58	DD	SW8270D	
N-Nitrosodimethylamine	ND	0.37	mg/Kg	1	11/21/15 06:58	DD	SW8270D	
N-Nitrosodi-n-propylamine	ND	0.26	mg/Kg	1	11/21/15 06:58	DD	SW8270D	
N-Nitrosodiphenylamine	ND	0.37	mg/Kg	1	11/21/15 06:58	DD	SW8270D	
Pentachloronitrobenzene	ND	0.37	mg/Kg	1	11/21/15 06:58	DD	SW8270D	
Pentachlorophenol	ND	0.37	mg/Kg	1	11/21/15 06:58	DD	SW8270D	
Phenanthrene	0.95	0.26	mg/Kg	1	11/21/15 06:58	DD	SW8270D	
Phenol	ND	0.26	mg/Kg	1	11/21/15 06:58	DD	SW8270D	
Pyrene	0.74	0.26	mg/Kg	1	11/21/15 06:58	DD	SW8270D	
Pyridine	ND	0.37	mg/Kg	1	11/21/15 06:58	DD	SW8270D	

QA/QC Surrogates

Project ID: 526 UNION AVE.
Client ID: SBX 0-2

Phoenix I.D.: BK26205

Parameter	Result	RL/ PQL	Units	Dilution	Date/Time	By	Reference
% 2,4,6-Tribromophenol	73		%	1	11/21/15 06:58	DD	30 - 130 %
% 2-Fluorobiphenyl	69		%	1	11/21/15 06:58	DD	30 - 130 %
% 2-Fluorophenol	55		%	1	11/21/15 06:58	DD	30 - 130 %
% Nitrobenzene-d5	69		%	1	11/21/15 06:58	DD	30 - 130 %
% Phenol-d5	68		%	1	11/21/15 06:58	DD	30 - 130 %
% Terphenyl-d14	53		%	1	11/21/15 06:58	DD	30 - 130 %

1 = This parameter is not certified by NY NELAC for this matrix. NY NELAC does not offer certification for all parameters at this time.
B = Present in blank, no bias suspected.

RL/PQL=Reporting/Practical Quantitation Level (Equivalent to NELAC LOQ, Limit of Quanitation) ND=Not Detected BRL=Below Reporting Level
QA/QC Surrogates: Surrogates are compounds (preceeded with a %) added by the lab to determine analysis efficiency. Surrogate results(%) listed in the report are not "detected" compounds.

Comments:

Per 1.4.6 of EPA method 8270D, 1,2-Diphenylhydrazine is unstable and readily converts to Azobenzene. Azobenzene is used for the calibration of 1,2-Diphenylhydrazine.

Please be advised that the NY 375 soil criteria for chromium are based on hexavalent chromium and trivalent chromium.

PCB Comment:
* For PCBs, as per section 11.9.3 of SW846 method 8082, when multiple Aroclor's of PCBs are present and the aroclor is no longer recognizable, quantitation may be performed by comparing the total area of the PCB pattern to that of the aroclor it mostly resembles. The PCB pattern did not resemble any of the standards, but most closely resembles a mixture of the Aroclors 1248 and 1254 and 1260.

Pesticide Comment:
Due to matrix interference caused by the presence of PCBs in the sample, an elevated RL was reported.

All soils, solids and sludges are reported on a dry weight basis unless otherwise noted in the sample comments.

If there are any questions regarding this data, please call Phoenix Client Services at extension 200.
This report must not be reproduced except in full as defined by the attached chain of custody.

Phyllis Shiller, Laboratory Director
November 25, 2015
Reviewed and Released by: Bobbi Aloisa, Vice President

PHOENIX

Environmental Laboratories, Inc.
587 East Middle Turnpike, P.O.Box 370, Manchester, CT 06045
Tel. (860) 645-1102 Fax (860) 645-0823

ACCREDITED IN ACCORDANCE WITH nelac NY # 11301

Analysis Report

November 25, 2015

FOR: Attn:
Creative Environmental Solutions
39 West 37th Street, 14th Floor
New York, NY 10018

Sample Information		Custody Information		Date	Time
Matrix:	SOIL	Collected by:		11/18/15	15:13
Location Code:	CREATENV	Received by:	LB	11/19/15	17:04
Rush Request:	72 Hour	Analyzed by:	see "By" below		
P.O.#:					

Laboratory Data

SDG ID: GBK26195
Phoenix ID: BK26206

Project ID: 526 UNION AVE.
Client ID: SB6 0-2

Parameter	Result	RL/ PQL	Units	Dilution	Date/Time	By	Reference	
Silver	6.69	0.34	mg/Kg	1	11/21/15 16:36	LK	SW6010C	
Aluminum	5760	51	mg/Kg	10	11/21/15 14:59	LK	SW6010C	
Arsenic	23.9	0.7	mg/Kg	1	11/21/15 16:36	LK	SW6010C	
Barium	661	0.34	mg/Kg	1	11/21/15 16:36	LK	SW6010C	
Beryllium	0.28	0.27	mg/Kg	1	11/21/15 16:36	LK	SW6010C	
Calcium	13900	51	mg/Kg	10	11/21/15 14:59	LK	SW6010C	
Cadmium	18.1	0.34	mg/Kg	1	11/21/15 16:36	LK	SW6010C	
Cobalt	14.1	0.34	mg/Kg	1	11/21/15 16:36	LK	SW6010C	
Chromium	112	0.34	mg/Kg	1	11/21/15 16:36	LK	SW6010C	
Copper	1140	3.4	mg/kg	10	11/21/15 14:59	LK	SW6010C	
Iron	43800	51	mg/Kg	10	11/21/15 14:59	LK	SW6010C	
Mercury	7.21	0.14	mg/Kg	1	11/23/15 13:21	RS	SW7471B	
Potassium	1660	5.1	mg/Kg	1	11/21/15 16:36	LK	SW6010C	
Magnesium	6060	51	mg/Kg	10	11/21/15 14:59	LK	SW6010C	
Manganese	458	3.4	mg/Kg	10	11/21/15 14:59	LK	SW6010C	
Sodium	701	5.1	mg/Kg	1	11/21/15 16:36	LK	SW6010C	B
Nickel	128	0.34	mg/Kg	1	11/21/15 16:36	LK	SW6010C	
Lead	1930	35	mg/Kg	100	11/25/15 00:15	EK	SW6010C	
Antimony	45.0	3.5	mg/Kg	1	11/24/15 17:57	EK	SW6010C	
Selenium	< 1.4	1.4	mg/Kg	1	11/21/15 16:36	LK	SW6010C	
Thallium	< 3.1	3.1	mg/Kg	1	11/21/15 16:36	LK	SW6010C	
Vanadium	31.4	0.34	mg/Kg	1	11/21/15 16:36	LK	SW6010C	
Zinc	2410	35	mg/Kg	100	11/25/15 00:15	EK	SW6010C	
Percent Solid	91		%		11/20/15 01:40	W	SW846-%Solid	
Soil Extraction for PCB	Completed				11/19/15 00:00	BC	SW3545A	
Soil Extraction for Pesticide	Completed				11/19/15 00:00	BC/V	SW3545A	
Soil Extraction for SVOA	Completed				11/20/15 00:00	CB/CKV	SW3545A	
Mercury Digestion	Completed				11/21/15 00:00	W/W	SW7471B	

Project ID: 526 UNION AVE.
Client ID: SB6 0-2

Phoenix I.D.: BK26206

Parameter	Result	RL/ PQL	Units	Dilution	Date/Time	By	Reference
Total Metals Digest	Completed				11/23/15 00:00	G/AG	SW3050B
Field Extraction	Completed				11/18/15 15:13		SW5035A
Polychlorinated Biphenyls							
PCB-1016	ND	0.72	mg/Kg	20	11/21/15 02:15	AW	SW8082A
PCB-1221	ND	0.72	mg/Kg	20	11/21/15 02:15	AW	SW8082A
PCB-1232	ND	0.72	mg/Kg	20	11/21/15 02:15	AW	SW8082A
PCB-1242	ND	0.72	mg/Kg	20	11/21/15 02:15	AW	SW8082A
PCB-1248	*	0.72	mg/Kg	20	11/21/15 02:15	AW	SW8082A
PCB-1254	*	0.72	mg/Kg	20	11/21/15 02:15	AW	SW8082A
PCB-1260	*	0.72	mg/Kg	20	11/21/15 02:15	AW	SW8082A
PCB-1262	ND	0.72	mg/Kg	20	11/21/15 02:15	AW	SW8082A
PCB-1268	ND	0.72	mg/Kg	20	11/21/15 02:15	AW	SW8082A
Total PCBs	2.6	0.72	mg/Kg	20	11/21/15 02:15	AW	SW8082A
QA/QC Surrogates							
% DCBP	112		%	20	11/21/15 02:15	AW	30 - 150 %
% TCMX	95		%	20	11/21/15 02:15	AW	30 - 150 %
Pesticides - Soil							
4,4' -DDD	0.043	0.022	mg/Kg	20	11/24/15 14:45	CE	SW8081B
4,4' -DDE	ND	0.022	mg/Kg	20	11/24/15 14:45	CE	SW8081B
4,4' -DDT	0.061	0.022	mg/Kg	20	11/24/15 14:45	CE	SW8081B
a-BHC	ND	0.018	mg/Kg	20	11/24/15 14:45	CE	SW8081B
a-Chlordane	ND	0.036	mg/Kg	20	11/24/15 14:45	CE	SW8081B
Aldrin	ND	0.018	mg/Kg	20	11/24/15 14:45	CE	SW8081B
b-BHC	ND	0.018	mg/Kg	20	11/24/15 14:45	CE	SW8081B
Chlordane	ND	0.36	mg/Kg	20	11/24/15 14:45	CE	SW8081B
d-BHC	ND	0.036	mg/Kg	20	11/24/15 14:45	CE	SW8081B
Dieldrin	ND	0.036	mg/Kg	20	11/24/15 14:45	CE	SW8081B
Endosulfan I	ND	0.072	mg/Kg	20	11/24/15 14:45	CE	SW8081B
Endosulfan II	ND	0.072	mg/Kg	20	11/24/15 14:45	CE	SW8081B
Endosulfan sulfate	ND	0.036	mg/Kg	20	11/24/15 14:45	CE	SW8081B
Endrin	ND	0.036	mg/Kg	20	11/24/15 14:45	CE	SW8081B
Endrin aldehyde	ND	0.036	mg/Kg	20	11/24/15 14:45	CE	SW8081B
Endrin ketone	ND	0.072	mg/Kg	20	11/24/15 14:45	CE	SW8081B
g-BHC	ND	0.014	mg/Kg	20	11/24/15 14:45	CE	SW8081B
g-Chlordane	ND	0.036	mg/Kg	20	11/24/15 14:45	CE	SW8081B
Heptachlor	ND	0.036	mg/Kg	20	11/24/15 14:45	CE	SW8081B
Heptachlor epoxide	ND	0.072	mg/Kg	20	11/24/15 14:45	CE	SW8081B
Methoxychlor	ND	0.36	mg/Kg	20	11/24/15 14:45	CE	SW8081B
Toxaphene	ND	1.4	mg/Kg	20	11/24/15 14:45	CE	SW8081B
QA/QC Surrogates							
% DCBP	Diluted Out		%	20	11/24/15 14:45	CE	30 - 150 %
% TCMX	Diluted Out		%	20	11/24/15 14:45	CE	30 - 150 %
Volatiles							
1,1,1,2-Tetrachloroethane	ND	0.6	mg/Kg	50	11/21/15 02:43	JLI	SW8260C
1,1,1-Trichloroethane	ND	0.6	mg/Kg	50	11/21/15 02:43	JLI	SW8260C
1,1,2,2-Tetrachloroethane	ND	0.6	mg/Kg	50	11/21/15 02:43	JLI	SW8260C
1,1,2-Trichloroethane	ND	0.6	mg/Kg	50	11/21/15 02:43	JLI	SW8260C

Project ID: 526 UNION AVE.
Client ID: SB6 0-2

Phoenix I.D.: BK26206

Parameter	Result	RL/ PQL	Units	Dilution	Date/Time	By	Reference	
1,1-Dichloroethane	ND	0.6	mg/Kg	50	11/21/15 02:43	JLI	SW8260C	
1,1-Dichloroethene	ND	0.6	mg/Kg	50	11/21/15 02:43	JLI	SW8260C	
1,1-Dichloropropene	ND	0.6	mg/Kg	50	11/21/15 02:43	JLI	SW8260C	
1,2,3-Trichlorobenzene	ND	0.6	mg/Kg	50	11/21/15 02:43	JLI	SW8260C	
1,2,3-Trichloropropane	ND	0.6	mg/Kg	50	11/21/15 02:43	JLI	SW8260C	
1,2,4-Trichlorobenzene	ND	0.6	mg/Kg	50	11/21/15 02:43	JLI	SW8260C	
1,2,4-Trimethylbenzene	ND	0.6	mg/Kg	50	11/21/15 02:43	JLI	SW8260C	
1,2-Dibromo-3-chloropropane	ND	0.6	mg/Kg	50	11/21/15 02:43	JLI	SW8260C	
1,2-Dibromoethane	ND	0.6	mg/Kg	50	11/21/15 02:43	JLI	SW8260C	
1,2-Dichlorobenzene	ND	0.6	mg/Kg	50	11/21/15 02:43	JLI	SW8260C	
1,2-Dichloroethane	ND	0.6	mg/Kg	50	11/21/15 02:43	JLI	SW8260C	
1,2-Dichloropropane	ND	0.6	mg/Kg	50	11/21/15 02:43	JLI	SW8260C	
1,3,5-Trimethylbenzene	ND	0.6	mg/Kg	50	11/21/15 02:43	JLI	SW8260C	
1,3-Dichlorobenzene	ND	0.6	mg/Kg	50	11/21/15 02:43	JLI	SW8260C	
1,3-Dichloropropane	ND	0.6	mg/Kg	50	11/21/15 02:43	JLI	SW8260C	
1,4-Dichlorobenzene	ND	0.6	mg/Kg	50	11/21/15 02:43	JLI	SW8260C	
2,2-Dichloropropane	ND	0.6	mg/Kg	50	11/21/15 02:43	JLI	SW8260C	
2-Chlorotoluene	ND	0.6	mg/Kg	50	11/21/15 02:43	JLI	SW8260C	
2-Hexanone	ND	3	mg/Kg	50	11/21/15 02:43	JLI	SW8260C	
2-Isopropyltoluene	ND	0.6	mg/Kg	50	11/21/15 02:43	JLI	SW8260C	1
4-Chlorotoluene	ND	0.6	mg/Kg	50	11/21/15 02:43	JLI	SW8260C	
4-Methyl-2-pentanone	ND	3	mg/Kg	50	11/21/15 02:43	JLI	SW8260C	
Acetone	ND	3	mg/Kg	50	11/21/15 02:43	JLI	SW8260C	
Acrylonitrile	ND	1.2	mg/Kg	50	11/21/15 02:43	JLI	SW8260C	
Benzene	ND	0.6	mg/Kg	50	11/21/15 02:43	JLI	SW8260C	
Bromobenzene	ND	0.6	mg/Kg	50	11/21/15 02:43	JLI	SW8260C	
Bromochloromethane	ND	0.6	mg/Kg	50	11/21/15 02:43	JLI	SW8260C	
Bromodichloromethane	ND	0.6	mg/Kg	50	11/21/15 02:43	JLI	SW8260C	
Bromoform	ND	0.6	mg/Kg	50	11/21/15 02:43	JLI	SW8260C	
Bromomethane	ND	0.6	mg/Kg	50	11/21/15 02:43	JLI	SW8260C	
Carbon Disulfide	ND	0.6	mg/Kg	50	11/21/15 02:43	JLI	SW8260C	
Carbon tetrachloride	ND	0.6	mg/Kg	50	11/21/15 02:43	JLI	SW8260C	
Chlorobenzene	ND	0.6	mg/Kg	50	11/21/15 02:43	JLI	SW8260C	
Chloroethane	ND	0.6	mg/Kg	50	11/21/15 02:43	JLI	SW8260C	
Chloroform	ND	0.6	mg/Kg	50	11/21/15 02:43	JLI	SW8260C	
Chloromethane	ND	0.6	mg/Kg	50	11/21/15 02:43	JLI	SW8260C	
cis-1,2-Dichloroethene	ND	0.6	mg/Kg	50	11/21/15 02:43	JLI	SW8260C	
cis-1,3-Dichloropropene	ND	0.6	mg/Kg	50	11/21/15 02:43	JLI	SW8260C	
Dibromochloromethane	ND	0.6	mg/Kg	50	11/21/15 02:43	JLI	SW8260C	
Dibromomethane	ND	0.6	mg/Kg	50	11/21/15 02:43	JLI	SW8260C	
Dichlorodifluoromethane	ND	0.6	mg/Kg	50	11/21/15 02:43	JLI	SW8260C	
Ethylbenzene	ND	0.6	mg/Kg	50	11/21/15 02:43	JLI	SW8260C	
Hexachlorobutadiene	ND	0.6	mg/Kg	50	11/21/15 02:43	JLI	SW8260C	
Isopropylbenzene	ND	0.6	mg/Kg	50	11/21/15 02:43	JLI	SW8260C	
m&p-Xylene	ND	0.6	mg/Kg	50	11/21/15 02:43	JLI	SW8260C	
Methyl Ethyl Ketone	ND	3	mg/Kg	50	11/21/15 02:43	JLI	SW8260C	
Methyl t-butyl ether (MTBE)	ND	1.2	mg/Kg	50	11/21/15 02:43	JLI	SW8260C	
Methylene chloride	ND	1.2	mg/Kg	50	11/21/15 02:43	JLI	SW8260C	
Naphthalene	ND	0.6	mg/Kg	50	11/21/15 02:43	JLI	SW8260C	

Parameter	Result	RL/ PQL	Units	Dilution	Date/Time	By	Reference	
n-Butylbenzene	ND	0.6	mg/Kg	50	11/21/15 02:43	JLI	SW8260C	
n-Propylbenzene	ND	0.6	mg/Kg	50	11/21/15 02:43	JLI	SW8260C	
o-Xylene	ND	0.6	mg/Kg	50	11/21/15 02:43	JLI	SW8260C	
p-Isopropyltoluene	ND	0.6	mg/Kg	50	11/21/15 02:43	JLI	SW8260C	
sec-Butylbenzene	ND	0.6	mg/Kg	50	11/21/15 02:43	JLI	SW8260C	
Styrene	ND	0.6	mg/Kg	50	11/21/15 02:43	JLI	SW8260C	
tert-Butylbenzene	ND	0.6	mg/Kg	50	11/21/15 02:43	JLI	SW8260C	
Tetrachloroethene	ND	0.6	mg/Kg	50	11/21/15 02:43	JLI	SW8260C	
Tetrahydrofuran (THF)	ND	1.2	mg/Kg	50	11/21/15 02:43	JLI	SW8260C	1
Toluene	ND	0.6	mg/Kg	50	11/21/15 02:43	JLI	SW8260C	
Total Xylenes	ND	0.6	mg/Kg	50	11/21/15 02:43	JLI	SW8260C	
trans-1,2-Dichloroethene	ND	0.6	mg/Kg	50	11/21/15 02:43	JLI	SW8260C	
trans-1,3-Dichloropropene	ND	0.6	mg/Kg	50	11/21/15 02:43	JLI	SW8260C	
trans-1,4-dichloro-2-butene	ND	1.2	mg/Kg	50	11/21/15 02:43	JLI	SW8260C	
Trichloroethene	ND	0.6	mg/Kg	50	11/21/15 02:43	JLI	SW8260C	
Trichlorofluoromethane	ND	0.6	mg/Kg	50	11/21/15 02:43	JLI	SW8260C	
Trichlorotrifluoroethane	ND	0.6	mg/Kg	50	11/21/15 02:43	JLI	SW8260C	
Vinyl chloride	ND	0.6	mg/Kg	50	11/21/15 02:43	JLI	SW8260C	
QA/QC Surrogates								
% 1,2-dichlorobenzene-d4	99		%	50	11/21/15 02:43	JLI	70 - 130 %	
% Bromofluorobenzene	105		%	50	11/21/15 02:43	JLI	70 - 130 %	
% Dibromofluoromethane	87		%	50	11/21/15 02:43	JLI	70 - 130 %	
% Toluene-d8	83		%	50	11/21/15 02:43	JLI	70 - 130 %	

Semivolatiles

1,2,4,5-Tetrachlorobenzene	ND	0.25	mg/Kg	1	11/21/15 07:21	DD	SW8270D
1,2,4-Trichlorobenzene	ND	0.25	mg/Kg	1	11/21/15 07:21	DD	SW8270D
1,2-Dichlorobenzene	ND	0.25	mg/Kg	1	11/21/15 07:21	DD	SW8270D
1,2-Diphenylhydrazine	ND	0.36	mg/Kg	1	11/21/15 07:21	DD	SW8270D
1,3-Dichlorobenzene	ND	0.25	mg/Kg	1	11/21/15 07:21	DD	SW8270D
1,4-Dichlorobenzene	ND	0.25	mg/Kg	1	11/21/15 07:21	DD	SW8270D
2,4,5-Trichlorophenol	ND	0.25	mg/Kg	1	11/21/15 07:21	DD	SW8270D
2,4,6-Trichlorophenol	ND	0.25	mg/Kg	1	11/21/15 07:21	DD	SW8270D
2,4-Dichlorophenol	ND	0.25	mg/Kg	1	11/21/15 07:21	DD	SW8270D
2,4-Dimethylphenol	ND	0.25	mg/Kg	1	11/21/15 07:21	DD	SW8270D
2,4-Dinitrophenol	ND	0.58	mg/Kg	1	11/21/15 07:21	DD	SW8270D
2,4-Dinitrotoluene	ND	0.25	mg/Kg	1	11/21/15 07:21	DD	SW8270D
2,6-Dinitrotoluene	ND	0.25	mg/Kg	1	11/21/15 07:21	DD	SW8270D
2-Chloronaphthalene	ND	0.25	mg/Kg	1	11/21/15 07:21	DD	SW8270D
2-Chlorophenol	ND	0.25	mg/Kg	1	11/21/15 07:21	DD	SW8270D
2-Methylnaphthalene	ND	0.25	mg/Kg	1	11/21/15 07:21	DD	SW8270D
2-Methylphenol (o-cresol)	ND	0.25	mg/Kg	1	11/21/15 07:21	DD	SW8270D
2-Nitroaniline	ND	0.58	mg/Kg	1	11/21/15 07:21	DD	SW8270D
2-Nitrophenol	ND	0.25	mg/Kg	1	11/21/15 07:21	DD	SW8270D
3&4-Methylphenol (m&p-cresol)	ND	0.36	mg/Kg	1	11/21/15 07:21	DD	SW8270D
3,3'-Dichlorobenzidine	ND	0.25	mg/Kg	1	11/21/15 07:21	DD	SW8270D
3-Nitroaniline	ND	0.58	mg/Kg	1	11/21/15 07:21	DD	SW8270D
4,6-Dinitro-2-methylphenol	ND	1	mg/Kg	1	11/21/15 07:21	DD	SW8270D
4-Bromophenyl phenyl ether	ND	0.36	mg/Kg	1	11/21/15 07:21	DD	SW8270D
4-Chloro-3-methylphenol	ND	0.25	mg/Kg	1	11/21/15 07:21	DD	SW8270D

Project ID: 526 UNION AVE.
Client ID: SB6 0-2

Phoenix I.D.: BK26206

Parameter	Result	RL/ PQL	Units	Dilution	Date/Time	By	Reference	
4-Chloroaniline	ND	0.25	mg/Kg	1	11/21/15 07:21	DD	SW8270D	
4-Chlorophenyl phenyl ether	ND	0.25	mg/Kg	1	11/21/15 07:21	DD	SW8270D	
4-Nitroaniline	ND	0.58	mg/Kg	1	11/21/15 07:21	DD	SW8270D	
4-Nitrophenol	ND	1	mg/Kg	1	11/21/15 07:21	DD	SW8270D	
Acenaphthene	0.82	0.25	mg/Kg	1	11/21/15 07:21	DD	SW8270D	
Acenaphthylene	ND	0.25	mg/Kg	1	11/21/15 07:21	DD	SW8270D	
Acetophenone	ND	0.25	mg/Kg	1	11/21/15 07:21	DD	SW8270D	
Aniline	ND	1	mg/Kg	1	11/21/15 07:21	DD	SW8270D	
Anthracene	1.3	0.25	mg/Kg	1	11/21/15 07:21	DD	SW8270D	
Benz(a)anthracene	1.7	0.25	mg/Kg	1	11/21/15 07:21	DD	SW8270D	
Benzidine	ND	0.43	mg/Kg	1	11/21/15 07:21	DD	SW8270D	
Benzo(a)pyrene	1.4	0.25	mg/Kg	1	11/21/15 07:21	DD	SW8270D	
Benzo(b)fluoranthene	1.7	0.25	mg/Kg	1	11/21/15 07:21	DD	SW8270D	
Benzo(ghi)perylene	0.84	0.25	mg/Kg	1	11/21/15 07:21	DD	SW8270D	
Benzo(k)fluoranthene	1.1	0.25	mg/Kg	1	11/21/15 07:21	DD	SW8270D	
Benzoic acid	ND	1	mg/Kg	1	11/21/15 07:21	DD	SW8270D	1
Benzyl butyl phthalate	0.26	0.25	mg/Kg	1	11/21/15 07:21	DD	SW8270D	
Bis(2-chloroethoxy)methane	ND	0.25	mg/Kg	1	11/21/15 07:21	DD	SW8270D	
Bis(2-chloroethyl)ether	ND	0.36	mg/Kg	1	11/21/15 07:21	DD	SW8270D	
Bis(2-chloroisopropyl)ether	ND	0.25	mg/Kg	1	11/21/15 07:21	DD	SW8270D	
Bis(2-ethylhexyl)phthalate	3.2	0.25	mg/Kg	1	11/21/15 07:21	DD	SW8270D	
Carbazole	ND	0.54	mg/Kg	1	11/21/15 07:21	DD	SW8270D	
Chrysene	2.3	0.25	mg/Kg	1	11/21/15 07:21	DD	SW8270D	
Dibenz(a,h)anthracene	ND	0.25	mg/Kg	1	11/21/15 07:21	DD	SW8270D	
Dibenzofuran	ND	0.25	mg/Kg	1	11/21/15 07:21	DD	SW8270D	
Diethyl phthalate	ND	0.25	mg/Kg	1	11/21/15 07:21	DD	SW8270D	
Dimethylphthalate	ND	0.25	mg/Kg	1	11/21/15 07:21	DD	SW8270D	
Di-n-butylphthalate	ND	0.25	mg/Kg	1	11/21/15 07:21	DD	SW8270D	
Di-n-octylphthalate	ND	0.25	mg/Kg	1	11/21/15 07:21	DD	SW8270D	
Fluoranthene	3.7	0.25	mg/Kg	1	11/21/15 07:21	DD	SW8270D	
Fluorene	1.3	0.25	mg/Kg	1	11/21/15 07:21	DD	SW8270D	
Hexachlorobenzene	ND	0.25	mg/Kg	1	11/21/15 07:21	DD	SW8270D	
Hexachlorobutadiene	ND	0.25	mg/Kg	1	11/21/15 07:21	DD	SW8270D	
Hexachlorocyclopentadiene	ND	0.25	mg/Kg	1	11/21/15 07:21	DD	SW8270D	
Hexachloroethane	ND	0.25	mg/Kg	1	11/21/15 07:21	DD	SW8270D	
Indeno(1,2,3-cd)pyrene	0.87	0.25	mg/Kg	1	11/21/15 07:21	DD	SW8270D	
Isophorone	ND	0.25	mg/Kg	1	11/21/15 07:21	DD	SW8270D	
Naphthalene	0.36	0.25	mg/Kg	1	11/21/15 07:21	DD	SW8270D	
Nitrobenzene	ND	0.25	mg/Kg	1	11/21/15 07:21	DD	SW8270D	
N-Nitrosodimethylamine	ND	0.36	mg/Kg	1	11/21/15 07:21	DD	SW8270D	
N-Nitrosodi-n-propylamine	ND	0.25	mg/Kg	1	11/21/15 07:21	DD	SW8270D	
N-Nitrosodiphenylamine	ND	0.36	mg/Kg	1	11/21/15 07:21	DD	SW8270D	
Pentachloronitrobenzene	ND	0.36	mg/Kg	1	11/21/15 07:21	DD	SW8270D	
Pentachlorophenol	ND	0.36	mg/Kg	1	11/21/15 07:21	DD	SW8270D	
Phenanthrene	3.2	0.25	mg/Kg	1	11/21/15 07:21	DD	SW8270D	
Phenol	ND	0.25	mg/Kg	1	11/21/15 07:21	DD	SW8270D	
Pyrene	4.8	0.25	mg/Kg	1	11/21/15 07:21	DD	SW8270D	
Pyridine	ND	0.36	mg/Kg	1	11/21/15 07:21	DD	SW8270D	

QA/QC Surrogates

Project ID: 526 UNION AVE.
Client ID: SB6 0-2

Phoenix I.D.: BK26206

Parameter	Result	RL/ PQL	Units	Dilution	Date/Time	By	Reference
% 2,4,6-Tribromophenol	67		%	1	11/21/15 07:21	DD	30 - 130 %
% 2-Fluorobiphenyl	74		%	1	11/21/15 07:21	DD	30 - 130 %
% 2-Fluorophenol	65		%	1	11/21/15 07:21	DD	30 - 130 %
% Nitrobenzene-d5	69		%	1	11/21/15 07:21	DD	30 - 130 %
% Phenol-d5	71		%	1	11/21/15 07:21	DD	30 - 130 %
% Terphenyl-d14	82		%	1	11/21/15 07:21	DD	30 - 130 %

1 = This parameter is not certified by NY NELAC for this matrix. NY NELAC does not offer certification for all parameters at this time.
B = Present in blank, no bias suspected.

RL/PQL=Reporting/Practical Quantitation Level (Equivalent to NELAC LOQ, Limit of Quanitation) ND=Not Detected BRL=Below Reporting Level
QA/QC Surrogates: Surrogates are compounds (preceeded with a %) added by the lab to determine analysis efficiency. Surrogate results(%) listed in the report are not "detected" compounds.

Comments:

Per 1.4.6 of EPA method 8270D, 1,2-Diphenylhydrazine is unstable and readily converts to Azobenzene. Azobenzene is used for the calibration of 1,2-Diphenylhydrazine.

Please be advised that the NY 375 soil criteria for chromium are based on hexavalent chromium and trivalent chromium.

Volatile Comment:
Elevated reporting limits for volatiles due to the presence of non-target compounds.

PCB Comment:
* For PCBs, as per section 11.9.3 of SW846 method 8082, when multiple Aroclor's of PCBs are present and the aroclor is no longer recognizable, quantitation may be performed by comparing the total area of the PCB pattern to that of the aroclor it mostly resembles. The PCB pattern did not resemble any of the standards, but most closely resembles a mixture of the Aroclors 1248 and 1254 and 1260.

Pesticide Comment:
Due to matrix interference caused by the presence of PCBs in the sample, an elevated RL was reported.

All soils, solids and sludges are reported on a dry weight basis unless otherwise noted in the sample comments.

If there are any questions regarding this data, please call Phoenix Client Services at extension 200.
This report must not be reproduced except in full as defined by the attached chain of custody.

Phyllis Shiller, Laboratory Director
November 25, 2015
Reviewed and Released by: Bobbi Aloisa, Vice President

PHOENIX

Environmental Laboratories, Inc.
587 East Middle Turnpike, P.O.Box 370, Manchester, CT 06045
Tel. (860) 645-1102 Fax (860) 645-0823

ACCREDITED IN ACCORDANCE WITH nelac NY # 11301

Analysis Report

November 25, 2015

FOR: Attn:
Creative Environmental Solutions
39 West 37th Street, 14th Floor
New York, NY 10018

Sample Information		Custody Information		Date	Time
Matrix:	SOIL	Collected by:		11/18/15	15:25
Location Code:	CREATENV	Received by:	LB	11/19/15	17:04
Rush Request:	72 Hour	Analyzed by:	see "By" below		
P.O.#:					

Laboratory Data

SDG ID: GBK26195
Phoenix ID: BK26207

Project ID: 526 UNION AVE.
Client ID: SB6 2-4

Parameter	Result	RL/ PQL	Units	Dilution	Date/Time	By	Reference	
Silver	4.18	0.38	mg/Kg	1	11/21/15 16:40	LK	SW6010C	
Aluminum	6590	58	mg/Kg	10	11/21/15 15:02	LK	SW6010C	
Arsenic	2.6	0.8	mg/Kg	1	11/21/15 16:40	LK	SW6010C	
Barium	67.5	3.8	mg/Kg	10	11/21/15 15:02	LK	SW6010C	
Beryllium	0.51	0.31	mg/Kg	1	11/21/15 16:40	LK	SW6010C	
Calcium	1240	5.8	mg/Kg	1	11/21/15 16:40	LK	SW6010C	
Cadmium	0.66	0.38	mg/Kg	1	11/21/15 16:40	LK	SW6010C	
Cobalt	7.99	0.38	mg/Kg	1	11/21/15 16:40	LK	SW6010C	
Chromium	26.3	0.38	mg/Kg	1	11/21/15 16:40	LK	SW6010C	
Copper	135	0.38	mg/kg	1	11/21/15 16:40	LK	SW6010C	
Iron	22300	58	mg/Kg	10	11/21/15 15:02	LK	SW6010C	
Mercury	0.47	0.03	mg/Kg	1	11/23/15 13:24	RS	SW7471B	
Potassium	868	58	mg/Kg	10	11/21/15 15:02	LK	SW6010C	
Magnesium	1700	5.8	mg/Kg	1	11/21/15 16:40	LK	SW6010C	
Manganese	203	3.8	mg/Kg	10	11/21/15 15:02	LK	SW6010C	
Sodium	90.4	5.8	mg/Kg	1	11/21/15 16:40	LK	SW6010C	
Nickel	19.6	0.38	mg/Kg	1	11/21/15 16:40	LK	SW6010C	
Lead	200	3.8	mg/Kg	10	11/21/15 15:02	LK	SW6010C	B
Antimony	81.0	3.8	mg/Kg	1	11/21/15 16:40	LK	SW6010C	
Selenium	< 1.5	1.5	mg/Kg	1	11/21/15 16:40	LK	SW6010C	
Thallium	< 3.5	3.5	mg/Kg	1	11/21/15 16:40	LK	SW6010C	
Vanadium	29.0	0.38	mg/Kg	1	11/21/15 16:40	LK	SW6010C	
Zinc	340	3.8	mg/Kg	10	11/21/15 15:02	LK	SW6010C	
Percent Solid	88		%		11/20/15 01:40	W	SW846-%Solid	
Soil Extraction for PCB	Completed				11/19/15 00:00	BC	SW3545A	
Soil Extraction for Pesticide	Completed				11/19/15 00:00	BC/V	SW3545A	
Soil Extraction for SVOA	Completed				11/20/15 00:00	CB/CKV	SW3545A	
Mercury Digestion	Completed				11/21/15 00:00	W/W	SW7471B	

Project ID: 526 UNION AVE.
Client ID: SB6 2-4

Phoenix I.D.: BK26207

Parameter	Result	RL/ PQL	Units	Dilution	Date/Time	By	Reference
Total Metals Digest	Completed				11/20/15 00:00	G/AG/T	SW3050B
Field Extraction	Completed				11/18/15 15:25		SW5035A
Polychlorinated Biphenyls							
PCB-1016	ND	0.75	mg/Kg	20	11/21/15 00:43	AW	SW8082A
PCB-1221	ND	0.75	mg/Kg	20	11/21/15 00:43	AW	SW8082A
PCB-1232	ND	0.75	mg/Kg	20	11/21/15 00:43	AW	SW8082A
PCB-1242	ND	0.75	mg/Kg	20	11/21/15 00:43	AW	SW8082A
PCB-1248	ND	0.75	mg/Kg	20	11/21/15 00:43	AW	SW8082A
PCB-1254	ND	0.75	mg/Kg	20	11/21/15 00:43	AW	SW8082A
PCB-1260	ND	0.75	mg/Kg	20	11/21/15 00:43	AW	SW8082A
PCB-1262	ND	0.75	mg/Kg	20	11/21/15 00:43	AW	SW8082A
PCB-1268	ND	0.75	mg/Kg	20	11/21/15 00:43	AW	SW8082A
QA/QC Surrogates							
% DCBP	73		%	20	11/21/15 00:43	AW	30 - 150 %
% TCMX	77		%	20	11/21/15 00:43	AW	30 - 150 %
Pesticides - Soil							
4,4' -DDD	ND	0.0023	mg/Kg	2	11/20/15 23:15	CE	SW8081B
4,4' -DDE	ND	0.0023	mg/Kg	2	11/20/15 23:15	CE	SW8081B
4,4' -DDT	ND	0.0023	mg/Kg	2	11/20/15 23:15	CE	SW8081B
a-BHC	ND	0.0075	mg/Kg	2	11/20/15 23:15	CE	SW8081B
a-Chlordane	ND	0.0038	mg/Kg	2	11/20/15 23:15	CE	SW8081B
Aldrin	ND	0.0038	mg/Kg	2	11/20/15 23:15	CE	SW8081B
b-BHC	ND	0.0075	mg/Kg	2	11/20/15 23:15	CE	SW8081B
Chlordane	ND	0.038	mg/Kg	2	11/20/15 23:15	CE	SW8081B
d-BHC	ND	0.0075	mg/Kg	2	11/20/15 23:15	CE	SW8081B
Dieldrin	ND	0.0038	mg/Kg	2	11/20/15 23:15	CE	SW8081B
Endosulfan I	ND	0.0075	mg/Kg	2	11/20/15 23:15	CE	SW8081B
Endosulfan II	ND	0.0075	mg/Kg	2	11/20/15 23:15	CE	SW8081B
Endosulfan sulfate	ND	0.0075	mg/Kg	2	11/20/15 23:15	CE	SW8081B
Endrin	ND	0.0075	mg/Kg	2	11/20/15 23:15	CE	SW8081B
Endrin aldehyde	ND	0.0075	mg/Kg	2	11/20/15 23:15	CE	SW8081B
Endrin ketone	ND	0.0075	mg/Kg	2	11/20/15 23:15	CE	SW8081B
g-BHC	ND	0.0015	mg/Kg	2	11/20/15 23:15	CE	SW8081B
g-Chlordane	ND	0.0038	mg/Kg	2	11/20/15 23:15	CE	SW8081B
Heptachlor	ND	0.0075	mg/Kg	2	11/20/15 23:15	CE	SW8081B
Heptachlor epoxide	ND	0.0075	mg/Kg	2	11/20/15 23:15	CE	SW8081B
Methoxychlor	ND	0.038	mg/Kg	2	11/20/15 23:15	CE	SW8081B
Toxaphene	ND	0.15	mg/Kg	2	11/20/15 23:15	CE	SW8081B
QA/QC Surrogates							
% DCBP	54		%	2	11/20/15 23:15	CE	30 - 150 %
% TCMX	62		%	2	11/20/15 23:15	CE	30 - 150 %
Volatiles							
1,1,1,2-Tetrachloroethane	ND	0.0046	mg/Kg	1	11/21/15 03:24	JLI	SW8260C
1,1,1-Trichloroethane	ND	0.0046	mg/Kg	1	11/21/15 03:24	JLI	SW8260C
1,1,2,2-Tetrachloroethane	ND	0.0046	mg/Kg	1	11/21/15 03:24	JLI	SW8260C
1,1,2-Trichloroethane	ND	0.0046	mg/Kg	1	11/21/15 03:24	JLI	SW8260C
1,1-Dichloroethane	ND	0.0046	mg/Kg	1	11/21/15 03:24	JLI	SW8260C

Project ID: 526 UNION AVE.
Client ID: SB6 2-4

Phoenix I.D.: BK26207

Parameter	Result	RL/ PQL	Units	Dilution	Date/Time	By	Reference	
1,1-Dichloroethene	ND	0.0046	mg/Kg	1	11/21/15 03:24	JLI	SW8260C	
1,1-Dichloropropene	ND	0.0046	mg/Kg	1	11/21/15 03:24	JLI	SW8260C	
1,2,3-Trichlorobenzene	ND	0.0046	mg/Kg	1	11/21/15 03:24	JLI	SW8260C	
1,2,3-Trichloropropane	ND	0.0046	mg/Kg	1	11/21/15 03:24	JLI	SW8260C	
1,2,4-Trichlorobenzene	ND	0.0046	mg/Kg	1	11/21/15 03:24	JLI	SW8260C	
1,2,4-Trimethylbenzene	ND	0.0046	mg/Kg	1	11/21/15 03:24	JLI	SW8260C	
1,2-Dibromo-3-chloropropane	ND	0.0046	mg/Kg	1	11/21/15 03:24	JLI	SW8260C	
1,2-Dibromoethane	ND	0.0046	mg/Kg	1	11/21/15 03:24	JLI	SW8260C	
1,2-Dichlorobenzene	ND	0.0046	mg/Kg	1	11/21/15 03:24	JLI	SW8260C	
1,2-Dichloroethane	ND	0.0046	mg/Kg	1	11/21/15 03:24	JLI	SW8260C	
1,2-Dichloropropane	ND	0.0046	mg/Kg	1	11/21/15 03:24	JLI	SW8260C	
1,3,5-Trimethylbenzene	ND	0.0046	mg/Kg	1	11/21/15 03:24	JLI	SW8260C	
1,3-Dichlorobenzene	ND	0.0046	mg/Kg	1	11/21/15 03:24	JLI	SW8260C	
1,3-Dichloropropane	ND	0.0046	mg/Kg	1	11/21/15 03:24	JLI	SW8260C	
1,4-Dichlorobenzene	ND	0.0046	mg/Kg	1	11/21/15 03:24	JLI	SW8260C	
2,2-Dichloropropane	ND	0.0046	mg/Kg	1	11/21/15 03:24	JLI	SW8260C	
2-Chlorotoluene	ND	0.0046	mg/Kg	1	11/21/15 03:24	JLI	SW8260C	
2-Hexanone	ND	0.023	mg/Kg	1	11/21/15 03:24	JLI	SW8260C	
2-Isopropyltoluene	ND	0.0046	mg/Kg	1	11/21/15 03:24	JLI	SW8260C	1
4-Chlorotoluene	ND	0.0046	mg/Kg	1	11/21/15 03:24	JLI	SW8260C	
4-Methyl-2-pentanone	ND	0.023	mg/Kg	1	11/21/15 03:24	JLI	SW8260C	
Acetone	0.024	S 0.023	mg/Kg	1	11/21/15 03:24	JLI	SW8260C	
Acrylonitrile	ND	0.0092	mg/Kg	1	11/21/15 03:24	JLI	SW8260C	
Benzene	ND	0.0046	mg/Kg	1	11/21/15 03:24	JLI	SW8260C	
Bromobenzene	ND	0.0046	mg/Kg	1	11/21/15 03:24	JLI	SW8260C	
Bromochloromethane	ND	0.0046	mg/Kg	1	11/21/15 03:24	JLI	SW8260C	
Bromodichloromethane	ND	0.0046	mg/Kg	1	11/21/15 03:24	JLI	SW8260C	
Bromoform	ND	0.0046	mg/Kg	1	11/21/15 03:24	JLI	SW8260C	
Bromomethane	ND	0.0046	mg/Kg	1	11/21/15 03:24	JLI	SW8260C	
Carbon Disulfide	ND	0.0046	mg/Kg	1	11/21/15 03:24	JLI	SW8260C	
Carbon tetrachloride	ND	0.0046	mg/Kg	1	11/21/15 03:24	JLI	SW8260C	
Chlorobenzene	ND	0.0046	mg/Kg	1	11/21/15 03:24	JLI	SW8260C	
Chloroethane	ND	0.0046	mg/Kg	1	11/21/15 03:24	JLI	SW8260C	
Chloroform	ND	0.0046	mg/Kg	1	11/21/15 03:24	JLI	SW8260C	
Chloromethane	ND	0.0046	mg/Kg	1	11/21/15 03:24	JLI	SW8260C	
cis-1,2-Dichloroethene	ND	0.0046	mg/Kg	1	11/21/15 03:24	JLI	SW8260C	
cis-1,3-Dichloropropene	ND	0.0046	mg/Kg	1	11/21/15 03:24	JLI	SW8260C	
Dibromochloromethane	ND	0.0046	mg/Kg	1	11/21/15 03:24	JLI	SW8260C	
Dibromomethane	ND	0.0046	mg/Kg	1	11/21/15 03:24	JLI	SW8260C	
Dichlorodifluoromethane	ND	0.0046	mg/Kg	1	11/21/15 03:24	JLI	SW8260C	
Ethylbenzene	ND	0.0046	mg/Kg	1	11/21/15 03:24	JLI	SW8260C	
Hexachlorobutadiene	ND	0.0046	mg/Kg	1	11/21/15 03:24	JLI	SW8260C	
Isopropylbenzene	ND	0.0046	mg/Kg	1	11/21/15 03:24	JLI	SW8260C	
m&p-Xylene	ND	0.0046	mg/Kg	1	11/21/15 03:24	JLI	SW8260C	
Methyl Ethyl Ketone	ND	0.023	mg/Kg	1	11/21/15 03:24	JLI	SW8260C	
Methyl t-butyl ether (MTBE)	ND	0.0092	mg/Kg	1	11/21/15 03:24	JLI	SW8260C	
Methylene chloride	ND	0.0092	mg/Kg	1	11/21/15 03:24	JLI	SW8260C	
Naphthalene	ND	0.0046	mg/Kg	1	11/21/15 03:24	JLI	SW8260C	
n-Butylbenzene	ND	0.0046	mg/Kg	1	11/21/15 03:24	JLI	SW8260C	

Parameter	Result	RL/ PQL	Units	Dilution	Date/Time	By	Reference	
n-Propylbenzene	ND	0.0046	mg/Kg	1	11/21/15 03:24	JLI	SW8260C	
o-Xylene	ND	0.0046	mg/Kg	1	11/21/15 03:24	JLI	SW8260C	
p-Isopropyltoluene	ND	0.0046	mg/Kg	1	11/21/15 03:24	JLI	SW8260C	
sec-Butylbenzene	ND	0.0046	mg/Kg	1	11/21/15 03:24	JLI	SW8260C	
Styrene	ND	0.0046	mg/Kg	1	11/21/15 03:24	JLI	SW8260C	
tert-Butylbenzene	ND	0.0046	mg/Kg	1	11/21/15 03:24	JLI	SW8260C	
Tetrachloroethene	ND	0.0046	mg/Kg	1	11/21/15 03:24	JLI	SW8260C	
Tetrahydrofuran (THF)	ND	0.0092	mg/Kg	1	11/21/15 03:24	JLI	SW8260C	1
Toluene	ND	0.0046	mg/Kg	1	11/21/15 03:24	JLI	SW8260C	
Total Xylenes	ND	0.0046	mg/Kg	1	11/21/15 03:24	JLI	SW8260C	
trans-1,2-Dichloroethene	ND	0.0046	mg/Kg	1	11/21/15 03:24	JLI	SW8260C	
trans-1,3-Dichloropropene	ND	0.0046	mg/Kg	1	11/21/15 03:24	JLI	SW8260C	
trans-1,4-dichloro-2-butene	ND	0.0092	mg/Kg	1	11/21/15 03:24	JLI	SW8260C	
Trichloroethene	ND	0.0046	mg/Kg	1	11/21/15 03:24	JLI	SW8260C	
Trichlorofluoromethane	ND	0.0046	mg/Kg	1	11/21/15 03:24	JLI	SW8260C	
Trichlorotrifluoroethane	ND	0.0046	mg/Kg	1	11/21/15 03:24	JLI	SW8260C	
Vinyl chloride	ND	0.0046	mg/Kg	1	11/21/15 03:24	JLI	SW8260C	
QA/QC Surrogates								
% 1,2-dichlorobenzene-d4	95		%	1	11/21/15 03:24	JLI	70 - 130 %	
% Bromofluorobenzene	101		%	1	11/21/15 03:24	JLI	70 - 130 %	
% Dibromofluoromethane	95		%	1	11/21/15 03:24	JLI	70 - 130 %	
% Toluene-d8	90		%	1	11/21/15 03:24	JLI	70 - 130 %	

Semivolatiles

1,2,4,5-Tetrachlorobenzene	ND	0.26	mg/Kg	1	11/21/15 07:44	DD	SW8270D
1,2,4-Trichlorobenzene	ND	0.26	mg/Kg	1	11/21/15 07:44	DD	SW8270D
1,2-Dichlorobenzene	ND	0.26	mg/Kg	1	11/21/15 07:44	DD	SW8270D
1,2-Diphenylhydrazine	ND	0.37	mg/Kg	1	11/21/15 07:44	DD	SW8270D
1,3-Dichlorobenzene	ND	0.26	mg/Kg	1	11/21/15 07:44	DD	SW8270D
1,4-Dichlorobenzene	ND	0.26	mg/Kg	1	11/21/15 07:44	DD	SW8270D
2,4,5-Trichlorophenol	ND	0.26	mg/Kg	1	11/21/15 07:44	DD	SW8270D
2,4,6-Trichlorophenol	ND	0.26	mg/Kg	1	11/21/15 07:44	DD	SW8270D
2,4-Dichlorophenol	ND	0.26	mg/Kg	1	11/21/15 07:44	DD	SW8270D
2,4-Dimethylphenol	ND	0.26	mg/Kg	1	11/21/15 07:44	DD	SW8270D
2,4-Dinitrophenol	ND	0.59	mg/Kg	1	11/21/15 07:44	DD	SW8270D
2,4-Dinitrotoluene	ND	0.26	mg/Kg	1	11/21/15 07:44	DD	SW8270D
2,6-Dinitrotoluene	ND	0.26	mg/Kg	1	11/21/15 07:44	DD	SW8270D
2-Chloronaphthalene	ND	0.26	mg/Kg	1	11/21/15 07:44	DD	SW8270D
2-Chlorophenol	ND	0.26	mg/Kg	1	11/21/15 07:44	DD	SW8270D
2-Methylnaphthalene	ND	0.26	mg/Kg	1	11/21/15 07:44	DD	SW8270D
2-Methylphenol (o-cresol)	ND	0.26	mg/Kg	1	11/21/15 07:44	DD	SW8270D
2-Nitroaniline	ND	0.59	mg/Kg	1	11/21/15 07:44	DD	SW8270D
2-Nitrophenol	ND	0.26	mg/Kg	1	11/21/15 07:44	DD	SW8270D
3&4-Methylphenol (m&p-cresol)	ND	0.37	mg/Kg	1	11/21/15 07:44	DD	SW8270D
3,3'-Dichlorobenzidine	ND	0.26	mg/Kg	1	11/21/15 07:44	DD	SW8270D
3-Nitroaniline	ND	0.59	mg/Kg	1	11/21/15 07:44	DD	SW8270D
4,6-Dinitro-2-methylphenol	ND	1.1	mg/Kg	1	11/21/15 07:44	DD	SW8270D
4-Bromophenyl phenyl ether	ND	0.37	mg/Kg	1	11/21/15 07:44	DD	SW8270D
4-Chloro-3-methylphenol	ND	0.26	mg/Kg	1	11/21/15 07:44	DD	SW8270D
4-Chloroaniline	ND	0.26	mg/Kg	1	11/21/15 07:44	DD	SW8270D

Project ID: 526 UNION AVE.
Client ID: SB6 2-4

Phoenix I.D.: BK26207

Parameter	Result	RL/ PQL	Units	Dilution	Date/Time	By	Reference	
4-Chlorophenyl phenyl ether	ND	0.26	mg/Kg	1	11/21/15 07:44	DD	SW8270D	
4-Nitroaniline	ND	0.59	mg/Kg	1	11/21/15 07:44	DD	SW8270D	
4-Nitrophenol	ND	1.1	mg/Kg	1	11/21/15 07:44	DD	SW8270D	
Acenaphthene	ND	0.26	mg/Kg	1	11/21/15 07:44	DD	SW8270D	
Acenaphthylene	ND	0.26	mg/Kg	1	11/21/15 07:44	DD	SW8270D	
Acetophenone	ND	0.26	mg/Kg	1	11/21/15 07:44	DD	SW8270D	
Aniline	ND	1.1	mg/Kg	1	11/21/15 07:44	DD	SW8270D	
Anthracene	ND	0.26	mg/Kg	1	11/21/15 07:44	DD	SW8270D	
Benz(a)anthracene	ND	0.26	mg/Kg	1	11/21/15 07:44	DD	SW8270D	
Benzidine	ND	0.44	mg/Kg	1	11/21/15 07:44	DD	SW8270D	
Benzo(a)pyrene	ND	0.26	mg/Kg	1	11/21/15 07:44	DD	SW8270D	
Benzo(b)fluoranthene	ND	0.26	mg/Kg	1	11/21/15 07:44	DD	SW8270D	
Benzo(ghi)perylene	ND	0.26	mg/Kg	1	11/21/15 07:44	DD	SW8270D	
Benzo(k)fluoranthene	ND	0.26	mg/Kg	1	11/21/15 07:44	DD	SW8270D	
Benzoic acid	ND	1.1	mg/Kg	1	11/21/15 07:44	DD	SW8270D	1
Benzyl butyl phthalate	ND	0.26	mg/Kg	1	11/21/15 07:44	DD	SW8270D	
Bis(2-chloroethoxy)methane	ND	0.26	mg/Kg	1	11/21/15 07:44	DD	SW8270D	
Bis(2-chloroethyl)ether	ND	0.37	mg/Kg	1	11/21/15 07:44	DD	SW8270D	
Bis(2-chloroisopropyl)ether	ND	0.26	mg/Kg	1	11/21/15 07:44	DD	SW8270D	
Bis(2-ethylhexyl)phthalate	ND	0.26	mg/Kg	1	11/21/15 07:44	DD	SW8270D	
Carbazole	ND	0.55	mg/Kg	1	11/21/15 07:44	DD	SW8270D	
Chrysene	ND	0.26	mg/Kg	1	11/21/15 07:44	DD	SW8270D	
Dibenz(a,h)anthracene	ND	0.26	mg/Kg	1	11/21/15 07:44	DD	SW8270D	
Dibenzofuran	ND	0.26	mg/Kg	1	11/21/15 07:44	DD	SW8270D	
Diethyl phthalate	ND	0.26	mg/Kg	1	11/21/15 07:44	DD	SW8270D	
Dimethylphthalate	ND	0.26	mg/Kg	1	11/21/15 07:44	DD	SW8270D	
Di-n-butylphthalate	ND	0.26	mg/Kg	1	11/21/15 07:44	DD	SW8270D	
Di-n-octylphthalate	ND	0.26	mg/Kg	1	11/21/15 07:44	DD	SW8270D	
Fluoranthene	ND	0.26	mg/Kg	1	11/21/15 07:44	DD	SW8270D	
Fluorene	ND	0.26	mg/Kg	1	11/21/15 07:44	DD	SW8270D	
Hexachlorobenzene	ND	0.26	mg/Kg	1	11/21/15 07:44	DD	SW8270D	
Hexachlorobutadiene	ND	0.26	mg/Kg	1	11/21/15 07:44	DD	SW8270D	
Hexachlorocyclopentadiene	ND	0.26	mg/Kg	1	11/21/15 07:44	DD	SW8270D	
Hexachloroethane	ND	0.26	mg/Kg	1	11/21/15 07:44	DD	SW8270D	
Indeno(1,2,3-cd)pyrene	ND	0.26	mg/Kg	1	11/21/15 07:44	DD	SW8270D	
Isophorone	ND	0.26	mg/Kg	1	11/21/15 07:44	DD	SW8270D	
Naphthalene	ND	0.26	mg/Kg	1	11/21/15 07:44	DD	SW8270D	
Nitrobenzene	ND	0.26	mg/Kg	1	11/21/15 07:44	DD	SW8270D	
N-Nitrosodimethylamine	ND	0.37	mg/Kg	1	11/21/15 07:44	DD	SW8270D	
N-Nitrosodi-n-propylamine	ND	0.26	mg/Kg	1	11/21/15 07:44	DD	SW8270D	
N-Nitrosodiphenylamine	ND	0.37	mg/Kg	1	11/21/15 07:44	DD	SW8270D	
Pentachloronitrobenzene	ND	0.37	mg/Kg	1	11/21/15 07:44	DD	SW8270D	
Pentachlorophenol	ND	0.37	mg/Kg	1	11/21/15 07:44	DD	SW8270D	
Phenanthrene	ND	0.26	mg/Kg	1	11/21/15 07:44	DD	SW8270D	
Phenol	ND	0.26	mg/Kg	1	11/21/15 07:44	DD	SW8270D	
Pyrene	ND	0.26	mg/Kg	1	11/21/15 07:44	DD	SW8270D	
Pyridine	ND	0.37	mg/Kg	1	11/21/15 07:44	DD	SW8270D	
QA/QC Surrogates								
% 2,4,6-Tribromophenol	72		%	1	11/21/15 07:44	DD	30 - 130 %	

Project ID: 526 UNION AVE.
Client ID: SB6 2-4

Phoenix I.D.: BK26207

Parameter	Result	RL/ PQL	Units	Dilution	Date/Time	By	Reference
% 2-Fluorobiphenyl	51		%	1	11/21/15 07:44	DD	30 - 130 %
% 2-Fluorophenol	54		%	1	11/21/15 07:44	DD	30 - 130 %
% Nitrobenzene-d5	61		%	1	11/21/15 07:44	DD	30 - 130 %
% Phenol-d5	62		%	1	11/21/15 07:44	DD	30 - 130 %
% Terphenyl-d14	66		%	1	11/21/15 07:44	DD	30 - 130 %

1 = This parameter is not certified by NY NELAC for this matrix. NY NELAC does not offer certification for all parameters at this time.
B = Present in blank, no bias suspected.

RL/PQL=Reporting/Practical Quantitation Level (Equivalent to NELAC LOQ, Limit of Quanitation) ND=Not Detected BRL=Below Reporting Level
QA/QC Surrogates: Surrogates are compounds (preceeded with a %) added by the lab to determine analysis efficiency. Surrogate results(%) listed in the report are not "detected" compounds.

Comments:

Per 1.4.6 of EPA method 8270D, 1,2-Diphenylhydrazine is unstable and readily converts to Azobenzene. Azobenzene is used for the calibration of 1,2-Diphenylhydrazine.

Please be advised that the NY 375 soil criteria for chromium are based on hexavalent chromium and trivalent chromium.

All soils, solids and sludges are reported on a dry weight basis unless otherwise noted in the sample comments.

S - Laboratory solvent, contamination is possible.

If there are any questions regarding this data, please call Phoenix Client Services at extension 200.
This report must not be reproduced except in full as defined by the attached chain of custody.

Phyllis Shiller, Laboratory Director
November 25, 2015
Reviewed and Released by: Bobbi Aloisa, Vice President

PHOENIX

Environmental Laboratories, Inc.
587 East Middle Turnpike, P.O.Box 370, Manchester, CT 06045
Tel. (860) 645-1102 Fax (860) 645-0823

ACCREDITED IN ACCORDANCE WITH nelac NY # 11301

Analysis Report

November 25, 2015

FOR: Attn:
Creative Environmental Solutions
39 West 37th Street, 14th Floor
New York, NY 10018

Sample Information		Custody Information		Date	Time
Matrix:	SOIL	Collected by:		11/18/15	15:54
Location Code:	CREATENV	Received by:	LB	11/19/15	17:04
Rush Request:	72 Hour	Analyzed by:	see "By" below		
P.O.#:					

Laboratory Data

SDG ID: GBK26195
Phoenix ID: BK26208

Project ID: 526 UNION AVE.
Client ID: SB6-6-8 SWI

Parameter	Result	RL/ PQL	Units	Dilution	Date/Time	By	Reference	
Silver	< 0.38	0.38	mg/Kg	1	11/21/15 16:43	LK	SW6010C	
Aluminum	8960	57	mg/Kg	10	11/21/15 15:05	LK	SW6010C	
Arsenic	6.3	0.8	mg/Kg	1	11/21/15 16:43	LK	SW6010C	
Barium	82.6	0.38	mg/Kg	1	11/21/15 16:43	LK	SW6010C	
Beryllium	0.46	0.31	mg/Kg	1	11/21/15 16:43	LK	SW6010C	
Calcium	9170	5.7	mg/Kg	1	11/21/15 16:43	LK	SW6010C	
Cadmium	0.73	0.38	mg/Kg	1	11/21/15 16:43	LK	SW6010C	
Cobalt	9.89	0.38	mg/Kg	1	11/21/15 16:43	LK	SW6010C	
Chromium	23.1	0.38	mg/Kg	1	11/21/15 16:43	LK	SW6010C	
Copper	40.6	0.38	mg/kg	1	11/21/15 16:43	LK	SW6010C	
Iron	36100	57	mg/Kg	10	11/21/15 15:05	LK	SW6010C	
Mercury	0.85	0.03	mg/Kg	1	11/23/15 13:26	RS	SW7471B	
Potassium	1410	5.7	mg/Kg	1	11/21/15 16:43	LK	SW6010C	
Magnesium	2120	5.7	mg/Kg	1	11/21/15 16:43	LK	SW6010C	
Manganese	771	3.8	mg/Kg	10	11/21/15 15:05	LK	SW6010C	
Sodium	107	5.7	mg/Kg	1	11/21/15 16:43	LK	SW6010C	
Nickel	18.6	0.38	mg/Kg	1	11/21/15 16:43	LK	SW6010C	
Lead	152	0.38	mg/Kg	1	11/21/15 16:43	LK	SW6010C	B
Antimony	< 3.8	3.8	mg/Kg	1	11/21/15 16:43	LK	SW6010C	
Selenium	< 1.5	1.5	mg/Kg	1	11/21/15 16:43	LK	SW6010C	
Thallium	< 3.4	3.4	mg/Kg	1	11/21/15 16:43	LK	SW6010C	
Vanadium	31.3	0.38	mg/Kg	1	11/21/15 16:43	LK	SW6010C	
Zinc	219	3.8	mg/Kg	10	11/21/15 15:05	LK	SW6010C	
Percent Solid	84		%		11/20/15 01:40	W	SW846-%Solid	
Soil Extraction for PCB	Completed				11/19/15 00:00	BC	SW3545A	
Soil Extraction for Pesticide	Completed				11/19/15 00:00	BC/V	SW3545A	
Soil Extraction for SVOA	Completed				11/20/15 00:00	CB/CKV	SW3545A	
Mercury Digestion	Completed				11/21/15 00:00	W/W	SW7471B	

Project ID: 526 UNION AVE.
Client ID: SB6-6-8 SWI

Phoenix I.D.: BK26208

Parameter	Result	RL/ PQL	Units	Dilution	Date/Time	By	Reference
Total Metals Digest	Completed				11/20/15 00:00	G/AG/T	SW3050B
Field Extraction	Completed				11/18/15 15:54		SW5035A
Polychlorinated Biphenyls							
PCB-1016	ND	0.077	mg/Kg	2	11/24/15 01:32	AW	SW8082A
PCB-1221	ND	0.077	mg/Kg	2	11/24/15 01:32	AW	SW8082A
PCB-1232	ND	0.077	mg/Kg	2	11/24/15 01:32	AW	SW8082A
PCB-1242	ND	0.077	mg/Kg	2	11/24/15 01:32	AW	SW8082A
PCB-1248	ND	0.077	mg/Kg	2	11/24/15 01:32	AW	SW8082A
PCB-1254	ND	0.077	mg/Kg	2	11/24/15 01:32	AW	SW8082A
PCB-1260	ND	0.077	mg/Kg	2	11/24/15 01:32	AW	SW8082A
PCB-1262	ND	0.077	mg/Kg	2	11/24/15 01:32	AW	SW8082A
PCB-1268	ND	0.077	mg/Kg	2	11/24/15 01:32	AW	SW8082A
QA/QC Surrogates							
% DCBP	75		%	2	11/24/15 01:32	AW	30 - 150 %
% TCMX	87		%	2	11/24/15 01:32	AW	30 - 150 %
Pesticides - Soil							
4,4' -DDD	ND	0.0023	mg/Kg	2	11/24/15 14:02	CE	SW8081B
4,4' -DDE	ND	0.0023	mg/Kg	2	11/24/15 14:02	CE	SW8081B
4,4' -DDT	ND	0.0023	mg/Kg	2	11/24/15 14:02	CE	SW8081B
a-BHC	ND	0.0077	mg/Kg	2	11/24/15 14:02	CE	SW8081B
a-Chlordane	ND	0.0038	mg/Kg	2	11/24/15 14:02	CE	SW8081B
Aldrin	ND	0.0038	mg/Kg	2	11/24/15 14:02	CE	SW8081B
b-BHC	ND	0.0077	mg/Kg	2	11/24/15 14:02	CE	SW8081B
Chlordane	ND	0.038	mg/Kg	2	11/24/15 14:02	CE	SW8081B
d-BHC	ND	0.0077	mg/Kg	2	11/24/15 14:02	CE	SW8081B
Dieldrin	ND	0.0038	mg/Kg	2	11/24/15 14:02	CE	SW8081B
Endosulfan I	ND	0.0077	mg/Kg	2	11/24/15 14:02	CE	SW8081B
Endosulfan II	ND	0.0077	mg/Kg	2	11/24/15 14:02	CE	SW8081B
Endosulfan sulfate	ND	0.0077	mg/Kg	2	11/24/15 14:02	CE	SW8081B
Endrin	ND	0.0077	mg/Kg	2	11/24/15 14:02	CE	SW8081B
Endrin aldehyde	ND	0.0077	mg/Kg	2	11/24/15 14:02	CE	SW8081B
Endrin ketone	ND	0.0077	mg/Kg	2	11/24/15 14:02	CE	SW8081B
g-BHC	ND	0.0015	mg/Kg	2	11/24/15 14:02	CE	SW8081B
g-Chlordane	ND	0.0038	mg/Kg	2	11/24/15 14:02	CE	SW8081B
Heptachlor	ND	0.0077	mg/Kg	2	11/24/15 14:02	CE	SW8081B
Heptachlor epoxide	ND	0.0077	mg/Kg	2	11/24/15 14:02	CE	SW8081B
Methoxychlor	ND	0.038	mg/Kg	2	11/24/15 14:02	CE	SW8081B
Toxaphene	ND	0.15	mg/Kg	2	11/24/15 14:02	CE	SW8081B
QA/QC Surrogates							
% DCBP	65		%	2	11/24/15 14:02	CE	30 - 150 %
% TCMX	73		%	2	11/24/15 14:02	CE	30 - 150 %
Volatiles							
1,1,1,2-Tetrachloroethane	ND	0.0044	mg/Kg	1	11/21/15 03:44	JLI	SW8260C
1,1,1-Trichloroethane	ND	0.0044	mg/Kg	1	11/21/15 03:44	JLI	SW8260C
1,1,2,2-Tetrachloroethane	ND	0.0044	mg/Kg	1	11/21/15 03:44	JLI	SW8260C
1,1,2-Trichloroethane	ND	0.0044	mg/Kg	1	11/21/15 03:44	JLI	SW8260C
1,1-Dichloroethane	ND	0.0044	mg/Kg	1	11/21/15 03:44	JLI	SW8260C

Project ID: 526 UNION AVE.
Client ID: SB6-6-8 SWI

Phoenix I.D.: BK26208

Parameter	Result	RL/ PQL	Units	Dilution	Date/Time	By	Reference	
1,1-Dichloroethene	ND	0.0044	mg/Kg	1	11/21/15 03:44	JLI	SW8260C	
1,1-Dichloropropene	ND	0.0044	mg/Kg	1	11/21/15 03:44	JLI	SW8260C	
1,2,3-Trichlorobenzene	ND	0.0044	mg/Kg	1	11/21/15 03:44	JLI	SW8260C	
1,2,3-Trichloropropane	ND	0.0044	mg/Kg	1	11/21/15 03:44	JLI	SW8260C	
1,2,4-Trichlorobenzene	ND	0.0044	mg/Kg	1	11/21/15 03:44	JLI	SW8260C	
1,2,4-Trimethylbenzene	ND	0.0044	mg/Kg	1	11/21/15 03:44	JLI	SW8260C	
1,2-Dibromo-3-chloropropane	ND	0.0044	mg/Kg	1	11/21/15 03:44	JLI	SW8260C	
1,2-Dibromoethane	ND	0.0044	mg/Kg	1	11/21/15 03:44	JLI	SW8260C	
1,2-Dichlorobenzene	ND	0.0044	mg/Kg	1	11/21/15 03:44	JLI	SW8260C	
1,2-Dichloroethane	ND	0.0044	mg/Kg	1	11/21/15 03:44	JLI	SW8260C	
1,2-Dichloropropane	ND	0.0044	mg/Kg	1	11/21/15 03:44	JLI	SW8260C	
1,3,5-Trimethylbenzene	ND	0.0044	mg/Kg	1	11/21/15 03:44	JLI	SW8260C	
1,3-Dichlorobenzene	ND	0.0044	mg/Kg	1	11/21/15 03:44	JLI	SW8260C	
1,3-Dichloropropane	ND	0.0044	mg/Kg	1	11/21/15 03:44	JLI	SW8260C	
1,4-Dichlorobenzene	ND	0.0044	mg/Kg	1	11/21/15 03:44	JLI	SW8260C	
2,2-Dichloropropane	ND	0.0044	mg/Kg	1	11/21/15 03:44	JLI	SW8260C	
2-Chlorotoluene	ND	0.0044	mg/Kg	1	11/21/15 03:44	JLI	SW8260C	
2-Hexanone	ND	0.022	mg/Kg	1	11/21/15 03:44	JLI	SW8260C	
2-Isopropyltoluene	ND	0.0044	mg/Kg	1	11/21/15 03:44	JLI	SW8260C	1
4-Chlorotoluene	ND	0.0044	mg/Kg	1	11/21/15 03:44	JLI	SW8260C	
4-Methyl-2-pentanone	ND	0.022	mg/Kg	1	11/21/15 03:44	JLI	SW8260C	
Acetone	0.022	S 0.022	mg/Kg	1	11/21/15 03:44	JLI	SW8260C	
Acrylonitrile	ND	0.0088	mg/Kg	1	11/21/15 03:44	JLI	SW8260C	
Benzene	ND	0.0044	mg/Kg	1	11/21/15 03:44	JLI	SW8260C	
Bromobenzene	ND	0.0044	mg/Kg	1	11/21/15 03:44	JLI	SW8260C	
Bromochloromethane	ND	0.0044	mg/Kg	1	11/21/15 03:44	JLI	SW8260C	
Bromodichloromethane	ND	0.0044	mg/Kg	1	11/21/15 03:44	JLI	SW8260C	
Bromoform	ND	0.0044	mg/Kg	1	11/21/15 03:44	JLI	SW8260C	
Bromomethane	ND	0.0044	mg/Kg	1	11/21/15 03:44	JLI	SW8260C	
Carbon Disulfide	ND	0.0044	mg/Kg	1	11/21/15 03:44	JLI	SW8260C	
Carbon tetrachloride	ND	0.0044	mg/Kg	1	11/21/15 03:44	JLI	SW8260C	
Chlorobenzene	ND	0.0044	mg/Kg	1	11/21/15 03:44	JLI	SW8260C	
Chloroethane	ND	0.0044	mg/Kg	1	11/21/15 03:44	JLI	SW8260C	
Chloroform	ND	0.0044	mg/Kg	1	11/21/15 03:44	JLI	SW8260C	
Chloromethane	ND	0.0044	mg/Kg	1	11/21/15 03:44	JLI	SW8260C	
cis-1,2-Dichloroethene	ND	0.0044	mg/Kg	1	11/21/15 03:44	JLI	SW8260C	
cis-1,3-Dichloropropene	ND	0.0044	mg/Kg	1	11/21/15 03:44	JLI	SW8260C	
Dibromochloromethane	ND	0.0044	mg/Kg	1	11/21/15 03:44	JLI	SW8260C	
Dibromomethane	ND	0.0044	mg/Kg	1	11/21/15 03:44	JLI	SW8260C	
Dichlorodifluoromethane	ND	0.0044	mg/Kg	1	11/21/15 03:44	JLI	SW8260C	
Ethylbenzene	ND	0.0044	mg/Kg	1	11/21/15 03:44	JLI	SW8260C	
Hexachlorobutadiene	ND	0.0044	mg/Kg	1	11/21/15 03:44	JLI	SW8260C	
Isopropylbenzene	ND	0.0044	mg/Kg	1	11/21/15 03:44	JLI	SW8260C	
m&p-Xylene	ND	0.0044	mg/Kg	1	11/21/15 03:44	JLI	SW8260C	
Methyl Ethyl Ketone	ND	0.022	mg/Kg	1	11/21/15 03:44	JLI	SW8260C	
Methyl t-butyl ether (MTBE)	ND	0.0088	mg/Kg	1	11/21/15 03:44	JLI	SW8260C	
Methylene chloride	ND	0.0088	mg/Kg	1	11/21/15 03:44	JLI	SW8260C	
Naphthalene	ND	0.0044	mg/Kg	1	11/21/15 03:44	JLI	SW8260C	
n-Butylbenzene	ND	0.0044	mg/Kg	1	11/21/15 03:44	JLI	SW8260C	

Parameter	Result	RL/ PQL	Units	Dilution	Date/Time	By	Reference	
n-Propylbenzene	ND	0.0044	mg/Kg	1	11/21/15 03:44	JLI	SW8260C	
o-Xylene	ND	0.0044	mg/Kg	1	11/21/15 03:44	JLI	SW8260C	
p-Isopropyltoluene	ND	0.0044	mg/Kg	1	11/21/15 03:44	JLI	SW8260C	
sec-Butylbenzene	ND	0.0044	mg/Kg	1	11/21/15 03:44	JLI	SW8260C	
Styrene	ND	0.0044	mg/Kg	1	11/21/15 03:44	JLI	SW8260C	
tert-Butylbenzene	ND	0.0044	mg/Kg	1	11/21/15 03:44	JLI	SW8260C	
Tetrachloroethene	ND	0.0044	mg/Kg	1	11/21/15 03:44	JLI	SW8260C	
Tetrahydrofuran (THF)	ND	0.0088	mg/Kg	1	11/21/15 03:44	JLI	SW8260C	1
Toluene	ND	0.0044	mg/Kg	1	11/21/15 03:44	JLI	SW8260C	
Total Xylenes	ND	0.0044	mg/Kg	1	11/21/15 03:44	JLI	SW8260C	
trans-1,2-Dichloroethene	ND	0.0044	mg/Kg	1	11/21/15 03:44	JLI	SW8260C	
trans-1,3-Dichloropropene	ND	0.0044	mg/Kg	1	11/21/15 03:44	JLI	SW8260C	
trans-1,4-dichloro-2-butene	ND	0.0088	mg/Kg	1	11/21/15 03:44	JLI	SW8260C	
Trichloroethene	ND	0.0044	mg/Kg	1	11/21/15 03:44	JLI	SW8260C	
Trichlorofluoromethane	ND	0.0044	mg/Kg	1	11/21/15 03:44	JLI	SW8260C	
Trichlorotrifluoroethane	ND	0.0044	mg/Kg	1	11/21/15 03:44	JLI	SW8260C	
Vinyl chloride	ND	0.0044	mg/Kg	1	11/21/15 03:44	JLI	SW8260C	
QA/QC Surrogates								
% 1,2-dichlorobenzene-d4	95		%	1	11/21/15 03:44	JLI	70 - 130 %	
% Bromofluorobenzene	102		%	1	11/21/15 03:44	JLI	70 - 130 %	
% Dibromofluoromethane	91		%	1	11/21/15 03:44	JLI	70 - 130 %	
% Toluene-d8	91		%	1	11/21/15 03:44	JLI	70 - 130 %	

Semivolatiles

1,2,4,5-Tetrachlorobenzene	ND	0.27	mg/Kg	1	11/20/15 23:19	DD	SW8270D
1,2,4-Trichlorobenzene	ND	0.27	mg/Kg	1	11/20/15 23:19	DD	SW8270D
1,2-Dichlorobenzene	ND	0.27	mg/Kg	1	11/20/15 23:19	DD	SW8270D
1,2-Diphenylhydrazine	ND	0.39	mg/Kg	1	11/20/15 23:19	DD	SW8270D
1,3-Dichlorobenzene	ND	0.27	mg/Kg	1	11/20/15 23:19	DD	SW8270D
1,4-Dichlorobenzene	ND	0.27	mg/Kg	1	11/20/15 23:19	DD	SW8270D
2,4,5-Trichlorophenol	ND	0.27	mg/Kg	1	11/20/15 23:19	DD	SW8270D
2,4,6-Trichlorophenol	ND	0.27	mg/Kg	1	11/20/15 23:19	DD	SW8270D
2,4-Dichlorophenol	ND	0.27	mg/Kg	1	11/20/15 23:19	DD	SW8270D
2,4-Dimethylphenol	ND	0.27	mg/Kg	1	11/20/15 23:19	DD	SW8270D
2,4-Dinitrophenol	ND	0.63	mg/Kg	1	11/20/15 23:19	DD	SW8270D
2,4-Dinitrotoluene	ND	0.27	mg/Kg	1	11/20/15 23:19	DD	SW8270D
2,6-Dinitrotoluene	ND	0.27	mg/Kg	1	11/20/15 23:19	DD	SW8270D
2-Chloronaphthalene	ND	0.27	mg/Kg	1	11/20/15 23:19	DD	SW8270D
2-Chlorophenol	ND	0.27	mg/Kg	1	11/20/15 23:19	DD	SW8270D
2-Methylnaphthalene	ND	0.27	mg/Kg	1	11/20/15 23:19	DD	SW8270D
2-Methylphenol (o-cresol)	ND	0.27	mg/Kg	1	11/20/15 23:19	DD	SW8270D
2-Nitroaniline	ND	0.63	mg/Kg	1	11/20/15 23:19	DD	SW8270D
2-Nitrophenol	ND	0.27	mg/Kg	1	11/20/15 23:19	DD	SW8270D
3&4-Methylphenol (m&p-cresol)	ND	0.39	mg/Kg	1	11/20/15 23:19	DD	SW8270D
3,3'-Dichlorobenzidine	ND	0.27	mg/Kg	1	11/20/15 23:19	DD	SW8270D
3-Nitroaniline	ND	0.63	mg/Kg	1	11/20/15 23:19	DD	SW8270D
4,6-Dinitro-2-methylphenol	ND	1.1	mg/Kg	1	11/20/15 23:19	DD	SW8270D
4-Bromophenyl phenyl ether	ND	0.39	mg/Kg	1	11/20/15 23:19	DD	SW8270D
4-Chloro-3-methylphenol	ND	0.27	mg/Kg	1	11/20/15 23:19	DD	SW8270D
4-Chloroaniline	ND	0.27	mg/Kg	1	11/20/15 23:19	DD	SW8270D

Project ID: 526 UNION AVE.
Client ID: SB6-6-8 SWI

Phoenix I.D.: BK26208

Parameter	Result	RL/ PQL	Units	Dilution	Date/Time	By	Reference	
4-Chlorophenyl phenyl ether	ND	0.27	mg/Kg	1	11/20/15 23:19	DD	SW8270D	
4-Nitroaniline	ND	0.63	mg/Kg	1	11/20/15 23:19	DD	SW8270D	
4-Nitrophenol	ND	1.1	mg/Kg	1	11/20/15 23:19	DD	SW8270D	
Acenaphthene	ND	0.27	mg/Kg	1	11/20/15 23:19	DD	SW8270D	
Acenaphthylene	ND	0.27	mg/Kg	1	11/20/15 23:19	DD	SW8270D	
Acetophenone	ND	0.27	mg/Kg	1	11/20/15 23:19	DD	SW8270D	
Aniline	ND	1.1	mg/Kg	1	11/20/15 23:19	DD	SW8270D	
Anthracene	ND	0.27	mg/Kg	1	11/20/15 23:19	DD	SW8270D	
Benz(a)anthracene	ND	0.27	mg/Kg	1	11/20/15 23:19	DD	SW8270D	
Benzidine	ND	0.47	mg/Kg	1	11/20/15 23:19	DD	SW8270D	
Benzo(a)pyrene	ND	0.27	mg/Kg	1	11/20/15 23:19	DD	SW8270D	
Benzo(b)fluoranthene	ND	0.27	mg/Kg	1	11/20/15 23:19	DD	SW8270D	
Benzo(ghi)perylene	ND	0.27	mg/Kg	1	11/20/15 23:19	DD	SW8270D	
Benzo(k)fluoranthene	ND	0.27	mg/Kg	1	11/20/15 23:19	DD	SW8270D	
Benzoic acid	ND	1.1	mg/Kg	1	11/20/15 23:19	DD	SW8270D	1
Benzyl butyl phthalate	ND	0.27	mg/Kg	1	11/20/15 23:19	DD	SW8270D	
Bis(2-chloroethoxy)methane	ND	0.27	mg/Kg	1	11/20/15 23:19	DD	SW8270D	
Bis(2-chloroethyl)ether	ND	0.39	mg/Kg	1	11/20/15 23:19	DD	SW8270D	
Bis(2-chloroisopropyl)ether	ND	0.27	mg/Kg	1	11/20/15 23:19	DD	SW8270D	
Bis(2-ethylhexyl)phthalate	ND	0.27	mg/Kg	1	11/20/15 23:19	DD	SW8270D	
Carbazole	ND	0.59	mg/Kg	1	11/20/15 23:19	DD	SW8270D	
Chrysene	ND	0.27	mg/Kg	1	11/20/15 23:19	DD	SW8270D	
Dibenz(a,h)anthracene	ND	0.27	mg/Kg	1	11/20/15 23:19	DD	SW8270D	
Dibenzofuran	ND	0.27	mg/Kg	1	11/20/15 23:19	DD	SW8270D	
Diethyl phthalate	ND	0.27	mg/Kg	1	11/20/15 23:19	DD	SW8270D	
Dimethylphthalate	ND	0.27	mg/Kg	1	11/20/15 23:19	DD	SW8270D	
Di-n-butylphthalate	ND	0.27	mg/Kg	1	11/20/15 23:19	DD	SW8270D	
Di-n-octylphthalate	ND	0.27	mg/Kg	1	11/20/15 23:19	DD	SW8270D	
Fluoranthene	ND	0.27	mg/Kg	1	11/20/15 23:19	DD	SW8270D	
Fluorene	ND	0.27	mg/Kg	1	11/20/15 23:19	DD	SW8270D	
Hexachlorobenzene	ND	0.27	mg/Kg	1	11/20/15 23:19	DD	SW8270D	
Hexachlorobutadiene	ND	0.27	mg/Kg	1	11/20/15 23:19	DD	SW8270D	
Hexachlorocyclopentadiene	ND	0.27	mg/Kg	1	11/20/15 23:19	DD	SW8270D	
Hexachloroethane	ND	0.27	mg/Kg	1	11/20/15 23:19	DD	SW8270D	
Indeno(1,2,3-cd)pyrene	ND	0.27	mg/Kg	1	11/20/15 23:19	DD	SW8270D	
Isophorone	ND	0.27	mg/Kg	1	11/20/15 23:19	DD	SW8270D	
Naphthalene	ND	0.27	mg/Kg	1	11/20/15 23:19	DD	SW8270D	
Nitrobenzene	ND	0.27	mg/Kg	1	11/20/15 23:19	DD	SW8270D	
N-Nitrosodimethylamine	ND	0.39	mg/Kg	1	11/20/15 23:19	DD	SW8270D	
N-Nitrosodi-n-propylamine	ND	0.27	mg/Kg	1	11/20/15 23:19	DD	SW8270D	
N-Nitrosodiphenylamine	ND	0.39	mg/Kg	1	11/20/15 23:19	DD	SW8270D	
Pentachloronitrobenzene	ND	0.39	mg/Kg	1	11/20/15 23:19	DD	SW8270D	
Pentachlorophenol	ND	0.39	mg/Kg	1	11/20/15 23:19	DD	SW8270D	
Phenanthrene	ND	0.27	mg/Kg	1	11/20/15 23:19	DD	SW8270D	
Phenol	ND	0.27	mg/Kg	1	11/20/15 23:19	DD	SW8270D	
Pyrene	ND	0.27	mg/Kg	1	11/20/15 23:19	DD	SW8270D	
Pyridine	ND	0.39	mg/Kg	1	11/20/15 23:19	DD	SW8270D	
QA/QC Surrogates								
% 2,4,6-Tribromophenol	86		%	1	11/20/15 23:19	DD	30 - 130 %	

Project ID: 526 UNION AVE.
Client ID: SB6-6-8 SWI

Phoenix I.D.: BK26208

Parameter	Result	RL/ PQL	Units	Dilution	Date/Time	By	Reference
% 2-Fluorobiphenyl	71		%	1	11/20/15 23:19	DD	30 - 130 %
% 2-Fluorophenol	62		%	1	11/20/15 23:19	DD	30 - 130 %
% Nitrobenzene-d5	54		%	1	11/20/15 23:19	DD	30 - 130 %
% Phenol-d5	68		%	1	11/20/15 23:19	DD	30 - 130 %
% Terphenyl-d14	83		%	1	11/20/15 23:19	DD	30 - 130 %

1 = This parameter is not certified by NY NELAC for this matrix. NY NELAC does not offer certification for all parameters at this time.
B = Present in blank, no bias suspected.

RL/PQL=Reporting/Practical Quantitation Level (Equivalent to NELAC LOQ, Limit of Quanitation) ND=Not Detected BRL=Below Reporting Level
QA/QC Surrogates: Surrogates are compounds (preceeded with a %) added by the lab to determine analysis efficiency. Surrogate results(%) listed in the report are not "detected" compounds.

Comments:

Per 1.4.6 of EPA method 8270D, 1,2-Diphenylhydrazine is unstable and readily converts to Azobenzene. Azobenzene is used for the calibration of 1,2-Diphenylhydrazine.

Please be advised that the NY 375 soil criteria for chromium are based on hexavalent chromium and trivalent chromium.

All soils, solids and sludges are reported on a dry weight basis unless otherwise noted in the sample comments.

S - Laboratory solvent, contamination is possible.

If there are any questions regarding this data, please call Phoenix Client Services at extension 200.
This report must not be reproduced except in full as defined by the attached chain of custody.

Phyllis Shiller, Laboratory Director
November 25, 2015
Reviewed and Released by: Bobbi Aloisa, Vice President

PHOENIX

Environmental Laboratories, Inc.
587 East Middle Turnpike, P.O.Box 370, Manchester, CT 06045
Tel. (860) 645-1102 Fax (860) 645-0823

ACCREDITED IN ACCORDANCE WITH nelac NY # 11301

QA/QC Report

November 25, 2015

QA/QC Data

SDG I.D.: GBK26195

Parameter	Blank	Blk RL	Sample Result	Dup Result	Dup RPD	LCS %	LCSD %	LCS RPD	MS %	MSD %	MS RPD	% Rec Limits	% RPD Limits	
QA/QC Batch 327305 (mg/kg), QC Sample No: BK25517 (BK26195, BK26196, BK26197, BK26198, BK26199, BK26200, BK26201, BK26202)														
ICP Metals - Soil														
Aluminum	BRL	5.0	10400	10100	2.90	103	107	3.8	NC	NC	NC	75 - 125	30	
Antimony	BRL	3.3	<3.7	<3.6	NC	85.9	86.7	0.9	83.2	87.2	4.7	75 - 125	30	
Arsenic	BRL	0.67	9.0	10.8	18.2	93.0	95.6	2.8	91.4	94.6	3.4	75 - 125	30	
Barium	BRL	0.33	112	131	15.6	104	108	3.8	>130	112	NC	75 - 125	30	m
Beryllium	BRL	0.27	0.63	1.00	NC	89.8	92.5	3.0	96.0	99.1	3.2	75 - 125	30	
Cadmium	BRL	0.33	2.76	4.00	36.7	110	110	0.0	91.8	94.3	2.7	75 - 125	30	r
Calcium	BRL	5.0	9090	7900	14.0	98.3	99.4	1.1	NC	NC	NC	75 - 125	30	
Chromium	BRL	0.33	22.1	30.3	31.3	96.1	99.3	3.3	122	103	16.9	75 - 125	30	r
Cobalt	BRL	0.33	8.46	10.1	17.7	107	109	1.9	94.7	97.3	2.7	75 - 125	30	
Copper	BRL	0.33	76.7	175	78.1	88.7	91.9	3.5	117	123	5.0	75 - 125	30	r
Iron	5.4	5.0	25100	33100	27.5	104	112	7.4	NC	NC	NC	75 - 125	30	
Lead	BRL	0.33	192	201	4.60	104	104	0.0	>130	102	NC	75 - 125	30	m
Magnesium	BRL	5.0	3490	3540	1.40	87.8	92.7	5.4	NC	NC	NC	75 - 125	30	
Manganese	BRL	0.33	1550	1680	8.00	101	101	0.0	NC	NC	NC	75 - 125	30	
Nickel	BRL	0.33	22.9	30.4	28.1	106	108	1.9	99.9	99.4	0.5	75 - 125	30	
Potassium	BRL	5.0	1180	1170	0.90	85.3	89.8	5.1	>130	>130	NC	75 - 125	30	m
Selenium	BRL	1.3	<1.5	<1.4	NC	89.4	92.0	2.9	77.4	81.6	5.3	75 - 125	30	
Silver	BRL	0.33	<0.37	0.77	NC	94.5	96.4	2.0	101	103	2.0	75 - 125	30	
Sodium	5.4	5.0	245	225	8.50	103	104	1.0	125	>130	NC	75 - 125	30	m
Thallium	BRL	3.0	<3.3	<3.2	NC	111	107	3.7	95.3	98.1	2.9	75 - 125	30	
Vanadium	BRL	0.33	29.0	29.7	2.40	95.1	96.4	1.4	103	104	1.0	75 - 125	30	
Zinc	BRL	0.33	2580	3780	37.7	101	104	2.9	NC	NC	NC	75 - 125	30	r
QA/QC Batch 327456 (mg/kg), QC Sample No: BK26203 (BK26203, BK26204, BK26205, BK26207, BK26208)														
ICP Metals - Soil														
Aluminum	BRL	5.0	3670	3920	6.60	116	112	3.5	NC	NC	NC	75 - 125	30	
Antimony	BRL	3.3	4.6	6.8	NC	106	102	3.8	95.8	102	6.3	75 - 125	30	
Arsenic	BRL	0.67	10.3	12.8	21.6	103	102	1.0	100	92.9	7.4	75 - 125	30	
Barium	BRL	0.33	230	193	17.5	111	111	0.0	>130	121	NC	75 - 125	30	m
Beryllium	BRL	0.27	<0.26	<0.28	NC	101	102	1.0	96.7	87.8	9.6	75 - 125	30	
Cadmium	BRL	0.33	14.2	8.61	49.0	125	128	2.4	88.2	77.6	12.8	75 - 125	30	l,r
Calcium	BRL	5.0	107000	98800	8.00	102	104	1.9	NC	NC	NC	75 - 125	30	
Chromium	BRL	0.33	23.3	29.6	23.8	110	110	0.0	105	95.1	9.9	75 - 125	30	
Cobalt	BRL	0.33	6.61	8.03	19.4	123	121	1.6	98.3	88.4	10.6	75 - 125	30	
Copper	BRL	0.33	143	142	0.70	99.4	99.2	0.2	104	94.8	9.3	75 - 125	30	
Iron	BRL	5.0	29500	41600	34.0	109	114	4.5	NC	NC	NC	75 - 125	30	r
Lead	0.41	0.33	1300	880	38.5	113	120	6.0	>130	>130	NC	75 - 125	30	m,r
Magnesium	BRL	5.0	48900	44200	10.1	96.9	91.1	6.2	NC	NC	NC	75 - 125	30	
Manganese	BRL	0.33	315	340	7.60	113	111	1.8	>130	79.7	NC	75 - 125	30	m
Nickel	BRL	0.33	20.4	26.1	24.5	120	123	2.5	104	87.1	17.7	75 - 125	30	
Potassium	BRL	5.0	893	886	0.80	108	96.2	11.6	>130	>130	NC	75 - 125	30	m

QA/QC Data

SDG I.D.: GBK26195

Parameter	Blank	Blk RL	Sample Result	Dup Result	Dup RPD	LCS %	LCSD %	LCS RPD	MS %	MSD %	MS RPD	% Rec Limits	% RPD Limits	
Selenium	BRL	1.3	<1.3	<1.4	NC	99.1	101	1.9	84.4	80.2	5.1	75 - 125	30	
Silver	BRL	0.33	1.27	0.75	NC	102	101	1.0	109	103	5.7	75 - 125	30	
Sodium	BRL	5.0	278	243	13.4	107	103	3.8	90.4	78.1	14.6	75 - 125	30	
Thallium	BRL	3.0	<2.9	<3.1	NC	126	123	2.4	99.9	103	3.1	75 - 125	30	l
Vanadium	BRL	0.33	46.0	49.1	6.50	106	103	2.9	108	95.9	11.9	75 - 125	30	
Zinc	BRL	0.33	840	1420	51.3	115	111	3.5	NC	NC	NC	75 - 125	30	r
QA/QC Batch 327516 (mg/kg), QC Sample No: BK26205 (BK26204, BK26205, BK26206, BK26207, BK26208)														
Mercury - Soil	BRL	0.06	1.39	0.95	37.6	113	109	3.6	NC	NC	NC	70 - 130	30	r
Comment:														
Additional Mercury criteria: LCS acceptance range for waters is 80-120% and for soils is 70-130%.														
QA/QC Batch 327649 (mg/kg), QC Sample No: BK26206 (BK26206)														
ICP Metals - Soil														
Aluminum	BRL	5.0	6250	5990	4.20	100	103	3.0	NC	NC	NC	75 - 125	30	
Antimony	BRL	3.3	45.0	70.0	43.5	94.2	97.6	3.5	97.6	98.4	0.8	75 - 125	30	r
Arsenic	BRL	0.67	12.1	15.5	24.6	91.3	95.7	4.7	97.6	93.4	4.4	75 - 125	30	
Barium	BRL	0.33	423	439	3.70	107	111	3.7	>130	69.5	NC	75 - 125	30	m
Beryllium	BRL	0.27	0.35	0.33	NC	88.2	91.4	3.6	98.1	94.1	4.2	75 - 125	30	
Cadmium	BRL	0.33	12.6	13.3	5.40	104	112	7.4	95.0	89.9	5.5	75 - 125	30	
Calcium	BRL	5.0	13100	11800	10.4	86.2	88.7	2.9	NC	NC	NC	75 - 125	30	
Chromium	BRL	0.33	74.8	77.2	3.20	96.2	99.6	3.5	105	98.9	6.0	75 - 125	30	
Cobalt	BRL	0.33	11.1	12.0	7.80	105	108	2.8	98.9	93.0	6.1	75 - 125	30	
Copper	BRL	0.33	762	958	22.8	88.2	91.9	4.1	NC	NC	NC	75 - 125	30	
Iron	BRL	5.0	30800	36700	17.5	94.4	102	7.7	NC	NC	NC	75 - 125	30	
Lead	BRL	0.33	1930	2490	25.3	102	104	1.9	NC	NC	NC	75 - 125	30	
Magnesium	BRL	5.0	4060	3740	8.20	80.3	82.4	2.6	NC	NC	NC	75 - 125	30	
Manganese	BRL	0.33	371	359	3.30	96.3	106	9.6	105	37.6	94.5	75 - 125	30	m,r
Nickel	BRL	0.33	126	142	11.9	103	106	2.9	108	96.5	11.2	75 - 125	30	
Potassium	BRL	5.0	1470	1490	1.40	94.6	97.5	3.0	>130	>130	NC	75 - 125	30	m
Selenium	BRL	1.3	<1.4	<1.5	NC	89.2	94.1	5.3	83.7	79.8	4.8	75 - 125	30	
Silver	BRL	0.33	4.19	4.22	0.70	93.3	96.4	3.3	103	98.3	4.7	75 - 125	30	
Sodium	6.4	5.0	311	735	81.1	107	111	3.7	>130	>130	NC	75 - 125	30	m,r
Thallium	BRL	3.0	<3.2	<3.3	NC	105	113	7.3	97.2	93.5	3.9	75 - 125	30	
Vanadium	BRL	0.33	26.9	27.2	1.10	93.4	96.4	3.2	105	98.0	6.9	75 - 125	30	
Zinc	BRL	0.33	2410	2660	9.90	106	111	4.6	NC	NC	NC	75 - 125	30	
QA/QC Batch 327515 (mg/kg), QC Sample No: BK26879 (BK26195, BK26196, BK26197, BK26198, BK26199, BK26200, BK26201, BK26202, BK26203)														
Mercury - Soil	BRL	0.06	0.04	0.04	NC	87.7	77.4	12.5	104	115	10.0	70 - 130	30	
Comment:														
Additional Mercury criteria: LCS acceptance range for waters is 80-120% and for soils is 70-130%.														

l = This parameter is outside laboratory LCS/LCSD specified recovery limits.
m = This parameter is outside laboratory MS/MSD specified recovery limits.
r = This parameter is outside laboratory RPD specified recovery limits.

PHOENIX
Environmental Laboratories, Inc.
587 East Middle Turnpike, P.O.Box 370, Manchester, CT 06045
Tel. (860) 645-1102 Fax (860) 645-0823

ACCREDITED IN ACCORDANCE WITH nelac NY # 11301

QA/QC Report

November 25, 2015

QA/QC Data

SDG I.D.: GBK26195

QA/QC Batch 327591 (mg/Kg), QC Sample No: BK24865 (BK26201 (50X) , BK26202, BK26203)

Volatiles - Soil

Parameter	Blank	Blk RL	LCS %	LCSD %	LCS RPD	MS %	MSD %	MS RPD	% Rec Limits	% RPD Limits	
1,1,1,2-Tetrachloroethane	ND	0.005	92	93	1.1	89	93	4.4	70 - 130	30	
1,1,1-Trichloroethane	ND	0.005	88	88	0.0	88	87	1.1	70 - 130	30	
1,1,2,2-Tetrachloroethane	ND	0.003	93	93	0.0	87	88	1.1	70 - 130	30	
1,1,2-Trichloroethane	ND	0.005	88	87	1.1	84	90	6.9	70 - 130	30	
1,1-Dichloroethane	ND	0.005	88	90	2.2	89	89	0.0	70 - 130	30	
1,1-Dichloroethene	ND	0.005	89	90	1.1	86	84	2.4	70 - 130	30	
1,1-Dichloropropene	ND	0.005	89	91	2.2	91	93	2.2	70 - 130	30	
1,2,3-Trichlorobenzene	ND	0.005	85	86	1.2	81	84	3.6	70 - 130	30	
1,2,3-Trichloropropane	ND	0.005	87	87	0.0	83	84	1.2	70 - 130	30	
1,2,4-Trichlorobenzene	ND	0.005	87	84	3.5	84	85	1.2	70 - 130	30	
1,2,4-Trimethylbenzene	ND	0.001	86	86	0.0	87	85	2.3	70 - 130	30	
1,2-Dibromo-3-chloropropane	ND	0.005	89	84	5.8	76	77	1.3	70 - 130	30	
1,2-Dibromoethane	ND	0.005	90	87	3.4	83	87	4.7	70 - 130	30	
1,2-Dichlorobenzene	ND	0.005	86	86	0.0	86	86	0.0	70 - 130	30	
1,2-Dichloroethane	ND	0.005	88	87	1.1	86	87	1.2	70 - 130	30	
1,2-Dichloropropane	ND	0.005	90	89	1.1	89	90	1.1	70 - 130	30	
1,3,5-Trimethylbenzene	ND	0.001	88	89	1.1	90	89	1.1	70 - 130	30	
1,3-Dichlorobenzene	ND	0.005	86	87	1.2	89	87	2.3	70 - 130	30	
1,3-Dichloropropane	ND	0.005	87	87	0.0	84	87	3.5	70 - 130	30	
1,4-Dichlorobenzene	ND	0.005	83	84	1.2	84	85	1.2	70 - 130	30	
2,2-Dichloropropane	ND	0.005	87	90	3.4	86	86	0.0	70 - 130	30	
2-Chlorotoluene	ND	0.005	90	91	1.1	90	91	1.1	70 - 130	30	
2-Hexanone	ND	0.025	85	83	2.4	73	79	7.9	70 - 130	30	
2-Isopropyltoluene	ND	0.005	92	93	1.1	94	94	0.0	70 - 130	30	
4-Chlorotoluene	ND	0.005	85	86	1.2	88	87	1.1	70 - 130	30	
4-Methyl-2-pentanone	ND	0.025	88	87	1.1	78	83	6.2	70 - 130	30	
Acetone	ND	0.01	68	66	3.0	58	62	6.7	70 - 130	30	l,m
Acrylonitrile	ND	0.005	90	89	1.1	85	87	2.3	70 - 130	30	
Benzene	ND	0.001	88	90	2.2	90	93	3.3	70 - 130	30	
Bromobenzene	ND	0.005	88	89	1.1	89	89	0.0	70 - 130	30	
Bromochloromethane	ND	0.005	88	86	2.3	86	87	1.2	70 - 130	30	
Bromodichloromethane	ND	0.005	93	94	1.1	88	92	4.4	70 - 130	30	
Bromoform	ND	0.005	94	92	2.2	76	84	10.0	70 - 130	30	
Bromomethane	ND	0.005	89	90	1.1	61	60	1.7	70 - 130	30	m
Carbon Disulfide	ND	0.005	91	94	3.2	81	80	1.2	70 - 130	30	
Carbon tetrachloride	ND	0.005	90	91	1.1	88	88	0.0	70 - 130	30	
Chlorobenzene	ND	0.005	86	86	0.0	85	87	2.3	70 - 130	30	
Chloroethane	ND	0.005	93	92	1.1	23	24	4.3	70 - 130	30	m
Chloroform	ND	0.005	81	87	7.1	82	82	0.0	70 - 130	30	
Chloromethane	ND	0.005	90	90	0.0	86	86	0.0	70 - 130	30	
cis-1,2-Dichloroethene	ND	0.005	87	87	0.0	90	89	1.1	70 - 130	30	

QA/QC Data

SDG I.D.: GBK26195

Parameter	Blank	Blk RL	LCS %	LCSD %	LCS RPD	MS %	MSD %	MS RPD	% Rec Limits	% RPD Limits	
cis-1,3-Dichloropropene	ND	0.005	89	91	2.2	85	88	3.5	70 - 130	30	
Dibromochloromethane	ND	0.003	97	95	2.1	84	89	5.8	70 - 130	30	
Dibromomethane	ND	0.005	86	85	1.2	84	87	3.5	70 - 130	30	
Dichlorodifluoromethane	ND	0.005	92	93	1.1	87	88	1.1	70 - 130	30	
Ethylbenzene	ND	0.001	88	88	0.0	89	90	1.1	70 - 130	30	
Hexachlorobutadiene	ND	0.005	89	90	1.1	90	89	1.1	70 - 130	30	
Isopropylbenzene	ND	0.001	90	91	1.1	92	89	3.3	70 - 130	30	
m&p-Xylene	ND	0.002	86	87	1.2	89	89	0.0	70 - 130	30	
Methyl ethyl ketone	ND	0.005	79	81	2.5	76	80	5.1	70 - 130	30	
Methyl t-butyl ether (MTBE)	ND	0.001	91	91	0.0	88	92	4.4	70 - 130	30	
Methylene chloride	ND	0.005	85	84	1.2	84	83	1.2	70 - 130	30	
Naphthalene	ND	0.005	92	93	1.1	81	86	6.0	70 - 130	30	
n-Butylbenzene	ND	0.001	86	87	1.2	89	87	2.3	70 - 130	30	
n-Propylbenzene	ND	0.001	85	85	0.0	87	85	2.3	70 - 130	30	
o-Xylene	ND	0.002	88	88	0.0	90	91	1.1	70 - 130	30	
p-Isopropyltoluene	ND	0.001	90	90	0.0	93	91	2.2	70 - 130	30	
sec-Butylbenzene	ND	0.001	92	94	2.2	95	93	2.1	70 - 130	30	
Styrene	ND	0.005	90	89	1.1	90	91	1.1	70 - 130	30	
tert-Butylbenzene	ND	0.001	91	92	1.1	92	90	2.2	70 - 130	30	
Tetrachloroethene	ND	0.005	85	87	2.3	89	90	1.1	70 - 130	30	
Tetrahydrofuran (THF)	ND	0.005	86	85	1.2	82	88	7.1	70 - 130	30	
Toluene	ND	0.001	88	89	1.1	90	92	2.2	70 - 130	30	
trans-1,2-Dichloroethene	ND	0.005	93	92	1.1	95	93	2.1	70 - 130	30	
trans-1,3-Dichloropropene	ND	0.005	89	88	1.1	83	86	3.6	70 - 130	30	
trans-1,4-dichloro-2-butene	ND	0.005	97	95	2.1	83	86	3.6	70 - 130	30	
Trichloroethene	ND	0.005	88	91	3.4	91	92	1.1	70 - 130	30	
Trichlorofluoromethane	ND	0.005	87	88	1.1	53	53	0.0	70 - 130	30	m
Trichlorotrifluoroethane	ND	0.005	90	90	0.0	88	87	1.1	70 - 130	30	
Vinyl chloride	ND	0.005	92	92	0.0	88	89	1.1	70 - 130	30	
% 1,2-dichlorobenzene-d4	102	%	98	101	3.0	99	99	0.0	70 - 130	30	
% Bromofluorobenzene	98	%	100	99	1.0	99	99	0.0	70 - 130	30	
% Dibromofluoromethane	96	%	98	95	3.1	96	99	3.1	70 - 130	30	
% Toluene-d8	100	%	100	102	2.0	100	101	1.0	70 - 130	30	

Comment:

Additional 8260 criteria: 10% of LCS/LCSD compounds can be outside of acceptance criteria as long as recovery is 40-160%.

QA/QC Batch 327422 (mg/Kg), QC Sample No: BK25757 (BK26202, BK26203, BK26204, BK26205)

Semivolatiles - Soil

1,2,4,5-Tetrachlorobenzene	ND	0.23	85	83	2.4	85	77	9.9	30 - 130	30	
1,2,4-Trichlorobenzene	ND	0.23	77	78	1.3	78	69	12.2	30 - 130	30	
1,2-Dichlorobenzene	ND	0.18	64	65	1.6	66	55	18.2	30 - 130	30	
1,2-Diphenylhydrazine	ND	0.23	75	75	0.0	79	73	7.9	30 - 130	30	
1,3-Dichlorobenzene	ND	0.23	60	60	0.0	61	51	17.9	30 - 130	30	
1,4-Dichlorobenzene	ND	0.23	62	63	1.6	64	53	18.8	30 - 130	30	
2,4,5-Trichlorophenol	ND	0.23	87	83	4.7	84	83	1.2	30 - 130	30	
2,4,6-Trichlorophenol	ND	0.13	79	79	0.0	79	74	6.5	30 - 130	30	
2,4-Dichlorophenol	ND	0.13	89	86	3.4	91	79	14.1	30 - 130	30	
2,4-Dimethylphenol	ND	0.23	79	76	3.9	86	73	16.4	30 - 130	30	
2,4-Dinitrophenol	ND	0.23	23	14	48.6	68	80	16.2	30 - 130	30	l,r
2,4-Dinitrotoluene	ND	0.13	84	86	2.4	88	80	9.5	30 - 130	30	
2,6-Dinitrotoluene	ND	0.13	84	87	3.5	83	78	6.2	30 - 130	30	
2-Chloronaphthalene	ND	0.23	75	76	1.3	78	71	9.4	30 - 130	30	
2-Chlorophenol	ND	0.23	72	70	2.8	74	66	11.4	30 - 130	30	

QA/QC Data

SDG I.D.: GBK26195

Parameter	Blank	Blk RL	LCS %	LCSD %	LCS RPD	MS %	MSD %	MS RPD	% Rec Limits	% RPD Limits	
2-Methylnaphthalene	ND	0.23	85	84	1.2	87	78	10.9	30 - 130	30	
2-Methylphenol (o-cresol)	ND	0.23	70	70	0.0	74	65	12.9	30 - 130	30	
2-Nitroaniline	ND	0.33	82	82	0.0	89	85	4.6	30 - 130	30	
2-Nitrophenol	ND	0.23	77	76	1.3	83	72	14.2	30 - 130	30	
3&4-Methylphenol (m&p-cresol)	ND	0.23	77	76	1.3	80	70	13.3	30 - 130	30	
3,3'-Dichlorobenzidine	ND	0.13	65	64	1.6	73	68	7.1	30 - 130	30	
3-Nitroaniline	ND	0.33	74	74	0.0	78	71	9.4	30 - 130	30	
4,6-Dinitro-2-methylphenol	ND	0.23	52	37	33.7	95	94	1.1	30 - 130	30	r
4-Bromophenyl phenyl ether	ND	0.23	87	79	9.6	89	86	3.4	30 - 130	30	
4-Chloro-3-methylphenol	ND	0.23	93	88	5.5	93	85	9.0	30 - 130	30	
4-Chloroaniline	ND	0.23	73	71	2.8	78	66	16.7	30 - 130	30	
4-Chlorophenyl phenyl ether	ND	0.23	76	76	0.0	77	73	5.3	30 - 130	30	
4-Nitroaniline	ND	0.23	79	81	2.5	84	74	12.7	30 - 130	30	
4-Nitrophenol	ND	0.23	86	83	3.6	92	81	12.7	30 - 130	30	
Acenaphthene	ND	0.23	75	77	2.6	76	70	8.2	30 - 130	30	
Acenaphthylene	ND	0.13	69	70	1.4	72	63	13.3	30 - 130	30	
Acetophenone	ND	0.23	69	69	0.0	72	62	14.9	30 - 130	30	
Aniline	ND	0.33	67	64	4.6	74	64	14.5	30 - 130	30	
Anthracene	ND	0.23	86	83	3.6	85	80	6.1	30 - 130	30	
Benz(a)anthracene	ND	0.23	84	77	8.7	84	76	10.0	30 - 130	30	
Benzidine	ND	0.33	43	31	32.4	54	54	0.0	30 - 130	30	r
Benzo(a)pyrene	ND	0.13	83	76	8.8	83	78	6.2	30 - 130	30	
Benzo(b)fluoranthene	ND	0.16	83	76	8.8	83	78	6.2	30 - 130	30	
Benzo(ghi)perylene	ND	0.23	86	81	6.0	86	83	3.6	30 - 130	30	
Benzo(k)fluoranthene	ND	0.23	80	72	10.5	81	74	9.0	30 - 130	30	
Benzoic Acid	ND	0.33	<10	<10	NC	34	51	40.0	30 - 130	30	l,r
Benzyl butyl phthalate	ND	0.23	81	74	9.0	80	75	6.5	30 - 130	30	
Bis(2-chloroethoxy)methane	ND	0.23	81	80	1.2	84	74	12.7	30 - 130	30	
Bis(2-chloroethyl)ether	ND	0.13	58	58	0.0	61	52	15.9	30 - 130	30	
Bis(2-chloroisopropyl)ether	ND	0.23	62	62	0.0	66	55	18.2	30 - 130	30	
Bis(2-ethylhexyl)phthalate	ND	0.23	84	80	4.9	84	73	14.0	30 - 130	30	
Carbazole	ND	0.33	88	85	3.5	86	84	2.4	30 - 130	30	
Chrysene	ND	0.23	87	83	4.7	87	79	9.6	30 - 130	30	
Dibenz(a,h)anthracene	ND	0.13	85	79	7.3	84	78	7.4	30 - 130	30	
Dibenzofuran	ND	0.23	83	81	2.4	83	76	8.8	30 - 130	30	
Diethyl phthalate	ND	0.23	72	71	1.4	74	68	8.5	30 - 130	30	
Dimethylphthalate	ND	0.23	79	79	0.0	80	72	10.5	30 - 130	30	
Di-n-butylphthalate	ND	0.23	86	81	6.0	85	82	3.6	30 - 130	30	
Di-n-octylphthalate	ND	0.23	83	77	7.5	84	75	11.3	30 - 130	30	
Fluoranthene	ND	0.23	88	79	10.8	86	88	2.3	30 - 130	30	
Fluorene	ND	0.23	82	81	1.2	83	76	8.8	30 - 130	30	
Hexachlorobenzene	ND	0.13	85	83	2.4	89	79	11.9	30 - 130	30	
Hexachlorobutadiene	ND	0.23	79	78	1.3	78	69	12.2	30 - 130	30	
Hexachlorocyclopentadiene	ND	0.23	83	79	4.9	81	76	6.4	30 - 130	30	
Hexachloroethane	ND	0.13	58	58	0.0	60	49	20.2	30 - 130	30	
Indeno(1,2,3-cd)pyrene	ND	0.23	86	82	4.8	86	80	7.2	30 - 130	30	
Isophorone	ND	0.13	72	72	0.0	78	67	15.2	30 - 130	30	
Naphthalene	ND	0.23	76	76	0.0	79	68	15.0	30 - 130	30	
Nitrobenzene	ND	0.13	69	70	1.4	72	62	14.9	30 - 130	30	
N-Nitrosodimethylamine	ND	0.23	47	52	10.1	54	37	37.4	30 - 130	30	r
N-Nitrosodi-n-propylamine	ND	0.13	75	72	4.1	78	66	16.7	30 - 130	30	
N-Nitrosodiphenylamine	ND	0.13	80	80	0.0	81	76	6.4	30 - 130	30	
Pentachloronitrobenzene	ND	0.23	85	86	1.2	85	79	7.3	30 - 130	30	

Parameter	Blank	Blk RL	LCS %	LCSD %	LCS RPD	MS %	MSD %	MS RPD	% Rec Limits	% RPD Limits	
Pentachlorophenol	ND	0.23	85	68	22.2	96	95	1.0	30 - 130	30	
Phenanthrene	ND	0.13	84	83	1.2	83	80	3.7	30 - 130	30	
Phenol	ND	0.23	72	72	0.0	77	67	13.9	30 - 130	30	
Pyrene	ND	0.23	88	79	10.8	87	89	2.3	30 - 130	30	
Pyridine	ND	0.23	34	36	5.7	39	26	40.0	30 - 130	30	m,r
% 2,4,6-Tribromophenol	64	%	74	68	8.5	79	76	3.9	30 - 130	30	
% 2-Fluorobiphenyl	67	%	70	71	1.4	71	65	8.8	30 - 130	30	
% 2-Fluorophenol	53	%	62	63	1.6	63	57	10.0	30 - 130	30	
% Nitrobenzene-d5	62	%	67	65	3.0	68	59	14.2	30 - 130	30	
% Phenol-d5	64	%	67	66	1.5	67	60	11.0	30 - 130	30	
% Terphenyl-d14	82	%	88	80	9.5	88	83	5.8	30 - 130	30	

Comment:

Additional 8270 criteria: 20% of compounds can be outside of acceptance criteria as long as recovery is at least 10%. (Acid surrogates acceptance range for aqueous samples: 15-110%, for soils 30-130%)

QA/QC Batch 327261 (mg/Kg), QC Sample No: BK25770 2X (BK26208)

Pesticides - Soil

4,4' -DDD	ND	0.0017	97	101	4.0	92	83	10.3	40 - 140	30	
4,4' -DDE	ND	0.0017	79	83	4.9	75	68	9.8	40 - 140	30	
4,4' -DDT	ND	0.0017	82	85	3.6	77	70	9.5	40 - 140	30	
a-BHC	ND	0.001	78	80	2.5	70	62	12.1	40 - 140	30	
a-Chlordane	ND	0.0033	92	95	3.2	86	77	11.0	40 - 140	30	
Aldrin	ND	0.001	107	109	1.9	99	87	12.9	40 - 140	30	
b-BHC	ND	0.001	98	100	2.0	90	77	15.6	40 - 140	30	
Chlordane	ND	0.033	81	78	3.8	89	81	9.4	40 - 140	30	
d-BHC	ND	0.0033	93	95	2.1	85	75	12.5	40 - 140	30	
Dieldrin	ND	0.001	84	88	4.7	79	71	10.7	40 - 140	30	
Endosulfan I	ND	0.0033	83	87	4.7	79	72	9.3	40 - 140	30	
Endosulfan II	ND	0.0033	90	94	4.3	85	77	9.9	40 - 140	30	
Endosulfan sulfate	ND	0.0033	81	86	6.0	74	66	11.4	40 - 140	30	
Endrin	ND	0.0033	95	99	4.1	89	79	11.9	40 - 140	30	
Endrin aldehyde	ND	0.0033	87	91	4.5	78	71	9.4	40 - 140	30	
Endrin ketone	ND	0.0033	92	97	5.3	83	77	7.5	40 - 140	30	
g-BHC	ND	0.001	83	86	3.6	74	62	17.6	40 - 140	30	
g-Chlordane	ND	0.0033	81	78	3.8	89	81	9.4	40 - 140	30	
Heptachlor	ND	0.0033	104	107	2.8	98	86	13.0	40 - 140	30	
Heptachlor epoxide	ND	0.0033	98	101	3.0	90	80	11.8	40 - 140	30	
Methoxychlor	ND	0.0033	108	105	2.8	96	89	7.6	40 - 140	30	
Toxaphene	ND	0.13	NA	NA	NC	NA	NA	NC	40 - 140	30	
% DCBP	102	%	94	96	2.1	88	81	8.3	30 - 150	30	
% TCMX	93	%	91	89	2.2	81	69	16.0	30 - 150	30	

QA/QC Batch 327607 (mg/Kg), QC Sample No: BK26024 (BK26201)

Volatiles - Soil

1,1,1,2-Tetrachloroethane	ND	0.005	97	98	1.0	91	94	3.2	70 - 130	30	
1,1,1-Trichloroethane	ND	0.005	95	96	1.0	91	93	2.2	70 - 130	30	
1,1,2-Trichloroethane	ND	0.005	95	93	2.1	88	93	5.5	70 - 130	30	
1,1-Dichloroethane	ND	0.005	94	94	0.0	92	95	3.2	70 - 130	30	
1,1-Dichloroethene	ND	0.005	90	93	3.3	86	87	1.2	70 - 130	30	
1,1-Dichloropropene	ND	0.005	95	96	1.0	94	98	4.2	70 - 130	30	
1,2-Dibromoethane	ND	0.005	91	92	1.1	83	86	3.6	70 - 130	30	
1,2-Dichloroethane	ND	0.005	91	91	0.0	85	91	6.8	70 - 130	30	
1,2-Dichloropropane	ND	0.005	93	95	2.1	90	94	4.3	70 - 130	30	
1,3-Dichloropropane	ND	0.005	90	90	0.0	85	87	2.3	70 - 130	30	

QA/QC Data

SDG I.D.: GBK26195

Parameter	Blank	Blk RL	LCS %	LCSD %	LCS RPD	MS %	MSD %	MS RPD	% Rec Limits	% RPD Limits	
2,2-Dichloropropane	ND	0.005	98	98	0.0	87	90	3.4	70 - 130	30	
2-Hexanone	ND	0.025	83	81	2.4	74	76	2.7	70 - 130	30	
4-Methyl-2-pentanone	ND	0.025	92	91	1.1	80	84	4.9	70 - 130	30	
Acetone	ND	0.01	68	72	5.7	58	57	1.7	70 - 130	30	l,m
Acrylonitrile	ND	0.005	92	95	3.2	87	95	8.8	70 - 130	30	
Benzene	ND	0.001	96	96	0.0	93	96	3.2	70 - 130	30	
Bromochloromethane	ND	0.005	93	97	4.2	91	96	5.3	70 - 130	30	
Bromodichloromethane	ND	0.005	100	100	0.0	91	94	3.2	70 - 130	30	
Bromoform	ND	0.005	96	93	3.2	79	85	7.3	70 - 130	30	
Bromomethane	ND	0.005	86	88	2.3	60	62	3.3	70 - 130	30	m
Carbon Disulfide	ND	0.005	90	92	2.2	80	82	2.5	70 - 130	30	
Carbon tetrachloride	ND	0.005	97	101	4.0	90	94	4.3	70 - 130	30	
Chlorobenzene	ND	0.005	91	92	1.1	88	90	2.2	70 - 130	30	
Chloroethane	ND	0.005	90	92	2.2	23	22	4.4	70 - 130	30	m
Chloroform	ND	0.005	92	88	4.4	85	86	1.2	70 - 130	30	
Chloromethane	ND	0.005	88	86	2.3	86	87	1.2	70 - 130	30	
cis-1,2-Dichloroethene	ND	0.005	95	95	0.0	92	94	2.2	70 - 130	30	
cis-1,3-Dichloropropene	ND	0.005	97	96	1.0	88	91	3.4	70 - 130	30	
Dibromochloromethane	ND	0.003	99	98	1.0	86	88	2.3	70 - 130	30	
Dibromomethane	ND	0.005	92	89	3.3	84	90	6.9	70 - 130	30	
Dichlorodifluoromethane	ND	0.005	87	86	1.2	79	84	6.1	70 - 130	30	
Ethylbenzene	ND	0.001	93	95	2.1	92	95	3.2	70 - 130	30	
m&p-Xylene	ND	0.002	92	94	2.2	92	93	1.1	70 - 130	30	
Methyl ethyl ketone	ND	0.005	82	83	1.2	76	82	7.6	70 - 130	30	
Methyl t-butyl ether (MTBE)	ND	0.001	99	100	1.0	94	96	2.1	70 - 130	30	
Methylene chloride	ND	0.005	89	90	1.1	84	85	1.2	70 - 130	30	
o-Xylene	ND	0.002	93	95	2.1	93	94	1.1	70 - 130	30	
Styrene	ND	0.005	94	97	3.1	92	95	3.2	70 - 130	30	
Tetrachloroethene	ND	0.005	97	97	0.0	94	97	3.1	70 - 130	30	
Tetrahydrofuran (THF)	ND	0.005	88	89	1.1	83	85	2.4	70 - 130	30	
Toluene	ND	0.001	96	96	0.0	94	97	3.1	70 - 130	30	
trans-1,2-Dichloroethene	ND	0.005	98	101	3.0	97	101	4.0	70 - 130	30	
trans-1,3-Dichloropropene	ND	0.005	95	95	0.0	85	89	4.6	70 - 130	30	
Trichloroethene	ND	0.005	99	98	1.0	94	99	5.2	70 - 130	30	
Trichlorofluoromethane	ND	0.005	88	89	1.1	54	54	0.0	70 - 130	30	m
Trichlorotrifluoroethane	ND	0.005	94	95	1.1	89	91	2.2	70 - 130	30	
Vinyl chloride	ND	0.005	89	91	2.2	90	90	0.0	70 - 130	30	
% Dibromofluoromethane	104	%	103	102	1.0	99	99	0.0	70 - 130	30	
% Toluene-d8	99	%	102	102	0.0	101	102	1.0	70 - 130	30	

Comment:

Additional 8260 criteria: 10% of LCS/LCSD compounds can be outside of acceptance criteria as long as recovery is 40-160%.

QA/QC Batch 327585 (mg/Kg), QC Sample No: BK26199 (BK26195, BK26196, BK26197 (50X) , BK26198, BK26199, BK26200)

Volatiles - Soil

1,1,1,2-Tetrachloroethane	ND	0.005	106	104	1.9	95	99	4.1	70 - 130	30	
1,1,1-Trichloroethane	ND	0.005	129	123	4.8	121	122	0.8	70 - 130	30	
1,1,2,2-Tetrachloroethane	ND	0.003	98	96	2.1	95	97	2.1	70 - 130	30	
1,1,2-Trichloroethane	ND	0.005	106	101	4.8	91	98	7.4	70 - 130	30	
1,1-Dichloroethane	ND	0.005	125	118	5.8	119	120	0.8	70 - 130	30	
1,1-Dichloroethene	ND	0.005	126	121	4.0	117	120	2.5	70 - 130	30	
1,1-Dichloropropene	ND	0.005	122	119	2.5	107	115	7.2	70 - 130	30	
1,2,3-Trichlorobenzene	ND	0.005	91	90	1.1	44	50	12.8	70 - 130	30	m
1,2,3-Trichloropropane	ND	0.005	94	89	5.5	92	92	0.0	70 - 130	30	

QA/QC Data

SDG I.D.: GBK26195

Parameter	Blank	Blk RL	LCS %	LCSD %	LCS RPD	MS %	MSD %	MS RPD	% Rec Limits	% RPD Limits	
1,2,4-Trichlorobenzene	ND	0.005	86	89	3.4	45	53	16.3	70 - 130	30	m
1,2,4-Trimethylbenzene	ND	0.001	100	101	1.0	88	93	5.5	70 - 130	30	
1,2-Dibromo-3-chloropropane	ND	0.005	95	93	2.1	80	86	7.2	70 - 130	30	
1,2-Dibromoethane	ND	0.005	104	100	3.9	86	90	4.5	70 - 130	30	
1,2-Dichlorobenzene	ND	0.005	96	97	1.0	72	80	10.5	70 - 130	30	
1,2-Dichloroethane	ND	0.005	109	106	2.8	95	101	6.1	70 - 130	30	
1,2-Dichloropropane	ND	0.005	111	107	3.7	101	107	5.8	70 - 130	30	
1,3,5-Trimethylbenzene	ND	0.001	107	107	0.0	96	100	4.1	70 - 130	30	
1,3-Dichlorobenzene	ND	0.005	97	99	2.0	74	84	12.7	70 - 130	30	
1,3-Dichloropropane	ND	0.005	103	97	6.0	91	93	2.2	70 - 130	30	
1,4-Dichlorobenzene	ND	0.005	95	96	1.0	70	79	12.1	70 - 130	30	
2,2-Dichloropropane	ND	0.005	124	116	6.7	120	118	1.7	70 - 130	30	
2-Chlorotoluene	ND	0.005	105	104	1.0	93	97	4.2	70 - 130	30	
2-Hexanone	ND	0.025	84	77	8.7	74	75	1.3	70 - 130	30	
2-Isopropyltoluene	ND	0.005	110	110	0.0	91	95	4.3	70 - 130	30	
4-Chlorotoluene	ND	0.005	101	101	0.0	86	92	6.7	70 - 130	30	
4-Methyl-2-pentanone	ND	0.025	96	86	11.0	85	88	3.5	70 - 130	30	
Acetone	ND	0.01	80	76	5.1	>200	198	NC	70 - 130	30	m
Acrylonitrile	ND	0.005	109	104	4.7	93	97	4.2	70 - 130	30	
Benzene	ND	0.001	119	116	2.6	110	115	4.4	70 - 130	30	
Bromobenzene	ND	0.005	103	105	1.9	91	96	5.3	70 - 130	30	
Bromochloromethane	ND	0.005	121	113	6.8	102	110	7.5	70 - 130	30	
Bromodichloromethane	ND	0.005	115	113	1.8	99	109	9.6	70 - 130	30	
Bromoform	ND	0.005	102	93	9.2	78	85	8.6	70 - 130	30	
Bromomethane	ND	0.005	119	113	5.2	111	112	0.9	70 - 130	30	
Carbon Disulfide	ND	0.005	117	113	3.5	92	100	8.3	70 - 130	30	
Carbon tetrachloride	ND	0.005	127	126	0.8	118	123	4.1	70 - 130	30	
Chlorobenzene	ND	0.005	104	102	1.9	86	94	8.9	70 - 130	30	
Chloroethane	ND	0.005	120	114	5.1	113	116	2.6	70 - 130	30	
Chloroform	ND	0.005	124	120	3.3	115	117	1.7	70 - 130	30	
Chloromethane	ND	0.005	126	120	4.9	116	122	5.0	70 - 130	30	
cis-1,2-Dichloroethene	ND	0.005	125	121	3.3	110	119	7.9	70 - 130	30	
cis-1,3-Dichloropropene	ND	0.005	109	106	2.8	87	97	10.9	70 - 130	30	
Dibromochloromethane	ND	0.003	106	101	4.8	90	95	5.4	70 - 130	30	
Dibromomethane	ND	0.005	108	105	2.8	88	98	10.8	70 - 130	30	
Dichlorodifluoromethane	ND	0.005	141	142	0.7	137	137	0.0	70 - 130	30	l,m
Ethylbenzene	ND	0.001	109	105	3.7	96	99	3.1	70 - 130	30	
Hexachlorobutadiene	ND	0.005	101	100	1.0	48	48	0.0	70 - 130	30	m
Isopropylbenzene	ND	0.001	109	109	0.0	106	106	0.0	70 - 130	30	
m&p-Xylene	ND	0.002	106	104	1.9	93	96	3.2	70 - 130	30	
Methyl ethyl ketone	ND	0.005	84	78	7.4	113	108	4.5	70 - 130	30	
Methyl t-butyl ether (MTBE)	ND	0.001	114	108	5.4	108	109	0.9	70 - 130	30	
Methylene chloride	ND	0.005	107	103	3.8	115	113	1.8	70 - 130	30	
Naphthalene	ND	0.005	92	92	0.0	54	65	18.5	70 - 130	30	m
n-Butylbenzene	ND	0.001	98	98	0.0	72	75	4.1	70 - 130	30	
n-Propylbenzene	ND	0.001	101	101	0.0	92	95	3.2	70 - 130	30	
o-Xylene	ND	0.002	109	105	3.7	93	97	4.2	70 - 130	30	
p-Isopropyltoluene	ND	0.001	103	105	1.9	86	88	2.3	70 - 130	30	
sec-Butylbenzene	ND	0.001	110	109	0.9	91	93	2.2	70 - 130	30	
Styrene	ND	0.005	106	102	3.8	80	89	10.7	70 - 130	30	
tert-Butylbenzene	ND	0.001	108	107	0.9	96	97	1.0	70 - 130	30	
Tetrachloroethene	ND	0.005	115	113	1.8	99	106	6.8	70 - 130	30	
Tetrahydrofuran (THF)	ND	0.005	104	96	8.0	93	99	6.3	70 - 130	30	

Parameter	Blank	Blk RL	LCS %	LCSD %	LCS RPD	MS %	MSD %	MS RPD	% Rec Limits	% RPD Limits
Toluene	ND	0.001	116	113	2.6	102	109	6.6	70 - 130	30
trans-1,2-Dichloroethene	ND	0.005	134	132	1.5	117	124	5.8	70 - 130	30
trans-1,3-Dichloropropene	ND	0.005	108	103	4.7	78	91	15.4	70 - 130	30
trans-1,4-dichloro-2-butene	ND	0.005	98	93	5.2	72	84	15.4	70 - 130	30
Trichloroethene	ND	0.005	123	120	2.5	106	113	6.4	70 - 130	30
Trichlorofluoromethane	ND	0.005	122	118	3.3	117	117	0.0	70 - 130	30
Trichlorotrifluoroethane	ND	0.005	124	120	3.3	119	119	0.0	70 - 130	30
Vinyl chloride	ND	0.005	124	122	1.6	115	117	1.7	70 - 130	30
% 1,2-dichlorobenzene-d4	99	%	98	98	0.0	98	99	1.0	70 - 130	30
% Bromofluorobenzene	99	%	103	99	4.0	97	99	2.0	70 - 130	30
% Dibromofluoromethane	103	%	106	104	1.9	108	104	3.8	70 - 130	30
% Toluene-d8	101	%	102	101	1.0	100	102	2.0	70 - 130	30

Comment:

Additional 8260 criteria: 10% of LCS/LCSD compounds can be outside of acceptance criteria as long as recovery is 40-160%.

QA/QC Batch 327294 (mg/Kg), QC Sample No: BK26200 2X (BK26195, BK26196, BK26197, BK26198, BK26199, BK26200, BK26201, BK26202, BK26203, BK26204, BK26205, BK26206)

Pesticides - Soil

4,4' -DDD	ND	0.0017	106			84	92	9.1	40 - 140	30
4,4' -DDE	ND	0.0017	93			77	89	14.5	40 - 140	30
4,4' -DDT	ND	0.0017	90			74	81	9.0	40 - 140	30
a-BHC	ND	0.001	105			84	93	10.2	40 - 140	30
a-Chlordane	ND	0.0033	98			80	88	9.5	40 - 140	30
Aldrin	ND	0.001	80			64	76	17.1	40 - 140	30
b-BHC	ND	0.001	80			67	72	7.2	40 - 140	30
Chlordane	ND	0.033	98			85	97	13.2	40 - 140	30
d-BHC	ND	0.0033	78			68	76	11.1	40 - 140	30
Dieldrin	ND	0.001	86			69	77	11.0	40 - 140	30
Endosulfan I	ND	0.0033	96			78	85	8.6	40 - 140	30
Endosulfan II	ND	0.0033	89			74	82	10.3	40 - 140	30
Endosulfan sulfate	ND	0.0033	87			69	77	11.0	40 - 140	30
Endrin	ND	0.0033	98			79	87	9.6	40 - 140	30
Endrin aldehyde	ND	0.0033	86			67	78	15.2	40 - 140	30
Endrin ketone	ND	0.0033	100			85	93	9.0	40 - 140	30
g-BHC	ND	0.001	96			77	86	11.0	40 - 140	30
g-Chlordane	ND	0.0033	98			85	97	13.2	40 - 140	30
Heptachlor	ND	0.0033	91			74	82	10.3	40 - 140	30
Heptachlor epoxide	ND	0.0033	95			77	83	7.5	40 - 140	30
Methoxychlor	ND	0.0033	93			75	82	8.9	40 - 140	30
Toxaphene	ND	0.13	NA			NA	NA	NC	40 - 140	30
% DCBP	87	%	98			82	93	12.6	30 - 150	30
% TCMX	82	%	90			78	87	10.9	30 - 150	30

Comment:

The QC for this batch consists of a Blank, LCS, MS, and MSD.

QA/QC Batch 327315 (mg/Kg), QC Sample No: BK26200 2X (BK26195, BK26196, BK26197, BK26198, BK26199, BK26200, BK26201, BK26202, BK26203, BK26204, BK26205, BK26206, BK26207, BK26208)

Polychlorinated Biphenyls - Soil

PCB-1016	ND	0.033	92	93	1.1	86	83	3.6	40 - 140	30
PCB-1221	ND	0.033							40 - 140	30
PCB-1232	ND	0.033							40 - 140	30
PCB-1242	ND	0.033							40 - 140	30
PCB-1248	ND	0.033							40 - 140	30
PCB-1254	ND	0.033							40 - 140	30

QA/QC Data

SDG I.D.: GBK26195

Parameter	Blank	Blk RL	LCS %	LCSD %	LCS RPD	MS %	MSD %	MS RPD	% Rec Limits	% RPD Limits	
PCB-1260	ND	0.033	93	93	0.0	90	85	5.7	40 - 140	30	
PCB-1262	ND	0.033							40 - 140	30	
PCB-1268	ND	0.033							40 - 140	30	
% DCBP (Surrogate Rec)	99	%	107	109	1.9	105	98	6.9	30 - 150	30	
% TCMX (Surrogate Rec)	92	%	99	99	0.0	91	86	5.6	30 - 150	30	

QA/QC Batch 327299 (mg/Kg), QC Sample No: BK26200 (BK26195, BK26196, BK26197, BK26198, BK26199, BK26200, BK26201)

Semivolatiles - Soil

1,2,4,5-Tetrachlorobenzene	ND	0.23	85	77	9.9	74			30 - 130	30	
1,2,4-Trichlorobenzene	ND	0.23	76	67	12.6	68			30 - 130	30	
1,2-Dichlorobenzene	ND	0.18	63	59	6.6	59			30 - 130	30	
1,2-Diphenylhydrazine	ND	0.23	76	70	8.2	68			30 - 130	30	
1,3-Dichlorobenzene	ND	0.23	59	55	7.0	53			30 - 130	30	
1,4-Dichlorobenzene	ND	0.23	61	57	6.8	56			30 - 130	30	
2,4,5-Trichlorophenol	ND	0.23	93	80	15.0	80			30 - 130	30	
2,4,6-Trichlorophenol	ND	0.13	81	74	9.0	69			30 - 130	30	
2,4-Dichlorophenol	ND	0.13	92	81	12.7	77			30 - 130	30	
2,4-Dimethylphenol	ND	0.23	87	75	14.8	72			30 - 130	30	
2,4-Dinitrophenol	ND	0.23	23	10	78.8	66			30 - 130	30	l,r
2,4-Dinitrotoluene	ND	0.13	87	78	10.9	75			30 - 130	30	
2,6-Dinitrotoluene	ND	0.13	88	76	14.6	75			30 - 130	30	
2-Chloronaphthalene	ND	0.23	77	70	9.5	67			30 - 130	30	
2-Chlorophenol	ND	0.23	75	68	9.8	68			30 - 130	30	
2-Methylnaphthalene	ND	0.23	85	80	6.1	75			30 - 130	30	
2-Methylphenol (o-cresol)	ND	0.23	79	69	13.5	66			30 - 130	30	
2-Nitroaniline	ND	0.33	88	77	13.3	75			30 - 130	30	
2-Nitrophenol	ND	0.23	78	75	3.9	75			30 - 130	30	
3&4-Methylphenol (m&p-cresol)	ND	0.23	83	74	11.5	72			30 - 130	30	
3,3'-Dichlorobenzidine	ND	0.13	77	67	13.9	65			30 - 130	30	
3-Nitroaniline	ND	0.33	79	70	12.1	68			30 - 130	30	
4,6-Dinitro-2-methylphenol	ND	0.23	51	32	45.8	72			30 - 130	30	r
4-Bromophenyl phenyl ether	ND	0.23	94	81	14.9	78			30 - 130	30	
4-Chloro-3-methylphenol	ND	0.23	97	91	6.4	84			30 - 130	30	
4-Chloroaniline	ND	0.23	75	75	0.0	71			30 - 130	30	
4-Chlorophenyl phenyl ether	ND	0.23	76	69	9.7	65			30 - 130	30	
4-Nitroaniline	ND	0.23	85	80	6.1	77			30 - 130	30	
4-Nitrophenol	ND	0.23	92	80	14.0	84			30 - 130	30	
Acenaphthene	ND	0.23	77	67	13.9	66			30 - 130	30	
Acenaphthylene	ND	0.13	70	63	10.5	59			30 - 130	30	
Acetophenone	ND	0.23	72	64	11.8	67			30 - 130	30	
Aniline	ND	0.33	68	67	1.5	64			30 - 130	30	
Anthracene	ND	0.23	95	84	12.3	77			30 - 130	30	
Benz(a)anthracene	ND	0.23	90	75	18.2	73			30 - 130	30	
Benzidine	ND	0.33	41	34	18.7	32			30 - 130	30	
Benzo(a)pyrene	ND	0.13	87	74	16.1	69			30 - 130	30	
Benzo(b)fluoranthene	ND	0.16	92	83	10.3	72			30 - 130	30	
Benzo(ghi)perylene	ND	0.23	89	79	11.9	73			30 - 130	30	
Benzo(k)fluoranthene	ND	0.23	81	69	16.0	65			30 - 130	30	
Benzoic Acid	ND	0.33	11	<10	NC	57			30 - 130	30	l
Benzyl butyl phthalate	ND	0.23	91	80	12.9	71			30 - 130	30	
Bis(2-chloroethoxy)methane	ND	0.23	85	76	11.2	76			30 - 130	30	
Bis(2-chloroethyl)ether	ND	0.13	56	52	7.4	53			30 - 130	30	
Bis(2-chloroisopropyl)ether	ND	0.23	67	62	7.8	63			30 - 130	30	

Parameter	Blank	Blk RL	LCS %	LCSD %	LCS RPD	MS %	MSD %	MS RPD	% Rec Limits	% RPD Limits	
Bis(2-ethylhexyl)phthalate	ND	0.23	92	77	17.8	75			30 - 130	30	
Carbazole	ND	0.33	94	82	13.6	78			30 - 130	30	
Chrysene	ND	0.23	95	78	19.7	76			30 - 130	30	
Dibenz(a,h)anthracene	ND	0.13	88	79	10.8	76			30 - 130	30	
Dibenzofuran	ND	0.23	85	75	12.5	71			30 - 130	30	
Diethyl phthalate	ND	0.23	73	67	8.6	64			30 - 130	30	
Dimethylphthalate	ND	0.23	83	72	14.2	68			30 - 130	30	
Di-n-butylphthalate	ND	0.23	94	78	18.6	73			30 - 130	30	
Di-n-octylphthalate	ND	0.23	92	74	21.7	72			30 - 130	30	
Fluoranthene	ND	0.23	93	78	17.5	80			30 - 130	30	
Fluorene	ND	0.23	81	72	11.8	70			30 - 130	30	
Hexachlorobenzene	ND	0.13	93	77	18.8	74			30 - 130	30	
Hexachlorobutadiene	ND	0.23	76	68	11.1	67			30 - 130	30	
Hexachlorocyclopentadiene	ND	0.23	79	67	16.4	66			30 - 130	30	
Hexachloroethane	ND	0.13	58	54	7.1	53			30 - 130	30	
Indeno(1,2,3-cd)pyrene	ND	0.23	89	80	10.7	77			30 - 130	30	
Isophorone	ND	0.13	75	67	11.3	69			30 - 130	30	
Naphthalene	ND	0.23	77	69	11.0	70			30 - 130	30	
Nitrobenzene	ND	0.13	73	65	11.6	69			30 - 130	30	
N-Nitrosodimethylamine	ND	0.23	39	37	5.3	40			30 - 130	30	
N-Nitrosodi-n-propylamine	ND	0.13	78	71	9.4	74			30 - 130	30	
N-Nitrosodiphenylamine	ND	0.13	81	72	11.8	67			30 - 130	30	
Pentachloronitrobenzene	ND	0.23	91	74	20.6	73			30 - 130	30	
Pentachlorophenol	ND	0.23	75	44	52.1	82			30 - 130	30	r
Phenanthrene	ND	0.13	90	77	15.6	81			30 - 130	30	
Phenol	ND	0.23	76	71	6.8	69			30 - 130	30	
Pyrene	ND	0.23	95	79	18.4	79			30 - 130	30	
Pyridine	ND	0.23	27	26	3.8	29			30 - 130	30	l,m
% 2,4,6-Tribromophenol	75	%	84	75	11.3	75			30 - 130	30	
% 2-Fluorobiphenyl	69	%	73	66	10.1	61			30 - 130	30	
% 2-Fluorophenol	58	%	67	59	12.7	58			30 - 130	30	
% Nitrobenzene-d5	65	%	71	63	11.9	68			30 - 130	30	
% Phenol-d5	68	%	70	66	5.9	63			30 - 130	30	
% Terphenyl-d14	83	%	98	78	22.7	73			30 - 130	30	

Comment:

MSD not reported for this batch.

Additional 8270 criteria: 20% of compounds can be outside of acceptance criteria as long as recovery is at least 10%. (Acid surrogates acceptance range for aqueous samples: 15-110%, for soils 30-130%)

QA/QC Batch 327557 (mg/Kg), QC Sample No: BK26207 (BK26204, BK26205, BK26206 (50X) , BK26207, BK26208)

Volatiles - Soil

1,1,1,2-Tetrachloroethane	ND	0.005	83	84	1.2	81	80	1.2	70 - 130	30	
1,1,1-Trichloroethane	ND	0.005	94	96	2.1	92	91	1.1	70 - 130	30	
1,1,2,2-Tetrachloroethane	ND	0.003	92	93	1.1	94	93	1.1	70 - 130	30	
1,1,2-Trichloroethane	ND	0.005	92	92	0.0	92	93	1.1	70 - 130	30	
1,1-Dichloroethane	ND	0.005	103	103	0.0	100	100	0.0	70 - 130	30	
1,1-Dichloroethene	ND	0.005	115	117	1.7	110	109	0.9	70 - 130	30	
1,1-Dichloropropene	ND	0.005	101	101	0.0	94	94	0.0	70 - 130	30	
1,2,3-Trichlorobenzene	ND	0.005	87	89	2.3	63	58	8.3	70 - 130	30	m
1,2,3-Trichloropropane	ND	0.005	90	92	2.2	92	90	2.2	70 - 130	30	
1,2,4-Trichlorobenzene	ND	0.005	82	83	1.2	65	60	8.0	70 - 130	30	m
1,2,4-Trimethylbenzene	ND	0.001	88	89	1.1	77	73	5.3	70 - 130	30	
1,2-Dibromo-3-chloropropane	ND	0.005	74	81	9.0	73	74	1.4	70 - 130	30	

QA/QC Data

SDG I.D.: GBK26195

Parameter	Blank	Blk RL	LCS %	LCSD %	LCS RPD	MS %	MSD %	MS RPD	% Rec Limits	% RPD Limits	
1,2-Dibromoethane	ND	0.005	88	88	0.0	88	88	0.0	70 - 130	30	
1,2-Dichlorobenzene	ND	0.005	92	93	1.1	81	78	3.8	70 - 130	30	
1,2-Dichloroethane	ND	0.005	100	100	0.0	98	99	1.0	70 - 130	30	
1,2-Dichloropropane	ND	0.005	101	102	1.0	101	101	0.0	70 - 130	30	
1,3,5-Trimethylbenzene	ND	0.001	93	94	1.1	81	75	7.7	70 - 130	30	
1,3-Dichlorobenzene	ND	0.005	86	88	2.3	76	72	5.4	70 - 130	30	
1,3-Dichloropropane	ND	0.005	93	93	0.0	93	94	1.1	70 - 130	30	
1,4-Dichlorobenzene	ND	0.005	88	90	2.2	77	73	5.3	70 - 130	30	
2,2-Dichloropropane	ND	0.005	93	95	2.1	93	93	0.0	70 - 130	30	
2-Chlorotoluene	ND	0.005	91	91	0.0	81	78	3.8	70 - 130	30	
2-Hexanone	ND	0.025	81	83	2.4	84	90	6.9	70 - 130	30	
2-Isopropyltoluene	ND	0.005	97	99	2.0	78	71	9.4	70 - 130	30	
4-Chlorotoluene	ND	0.005	88	88	0.0	78	74	5.3	70 - 130	30	
4-Methyl-2-pentanone	ND	0.025	93	95	2.1	94	97	3.1	70 - 130	30	
Acetone	ND	0.01	84	97	14.4	150	149	0.7	70 - 130	30	m
Acrylonitrile	ND	0.005	94	98	4.2	93	96	3.2	70 - 130	30	
Benzene	ND	0.001	98	99	1.0	94	95	1.1	70 - 130	30	
Bromobenzene	ND	0.005	94	94	0.0	87	83	4.7	70 - 130	30	
Bromochloromethane	ND	0.005	93	95	2.1	92	93	1.1	70 - 130	30	
Bromodichloromethane	ND	0.005	93	93	0.0	90	91	1.1	70 - 130	30	
Bromoform	ND	0.005	65	68	4.5	63	64	1.6	70 - 130	30	l,m
Bromomethane	ND	0.005	119	122	2.5	116	117	0.9	70 - 130	30	
Carbon Disulfide	ND	0.005	115	115	0.0	104	100	3.9	70 - 130	30	
Carbon tetrachloride	ND	0.005	84	86	2.4	79	79	0.0	70 - 130	30	
Chlorobenzene	ND	0.005	95	93	2.1	89	88	1.1	70 - 130	30	
Chloroethane	ND	0.005	120	119	0.8	112	114	1.8	70 - 130	30	
Chloroform	ND	0.005	95	95	0.0	94	94	0.0	70 - 130	30	
Chloromethane	ND	0.005	119	115	3.4	102	103	1.0	70 - 130	30	
cis-1,2-Dichloroethene	ND	0.005	96	97	1.0	94	93	1.1	70 - 130	30	
cis-1,3-Dichloropropene	ND	0.005	94	94	0.0	91	90	1.1	70 - 130	30	
Dibromochloromethane	ND	0.003	78	79	1.3	77	79	2.6	70 - 130	30	
Dibromomethane	ND	0.005	95	95	0.0	94	93	1.1	70 - 130	30	
Dichlorodifluoromethane	ND	0.005	127	127	0.0	106	105	0.9	70 - 130	30	
Ethylbenzene	ND	0.001	93	95	2.1	88	86	2.3	70 - 130	30	
Hexachlorobutadiene	ND	0.005	96	95	1.0	46	37	21.7	70 - 130	30	m
Isopropylbenzene	ND	0.001	94	95	1.1	84	78	7.4	70 - 130	30	
m&p-Xylene	ND	0.002	90	89	1.1	83	82	1.2	70 - 130	30	
Methyl ethyl ketone	ND	0.005	87	90	3.4	106	110	3.7	70 - 130	30	
Methyl t-butyl ether (MTBE)	ND	0.001	98	99	1.0	99	101	2.0	70 - 130	30	
Methylene chloride	ND	0.005	94	97	3.1	101	101	0.0	70 - 130	30	
Naphthalene	ND	0.005	89	92	3.3	78	74	5.3	70 - 130	30	
n-Butylbenzene	ND	0.001	93	94	1.1	68	59	14.2	70 - 130	30	m
n-Propylbenzene	ND	0.001	88	88	0.0	76	69	9.7	70 - 130	30	m
o-Xylene	ND	0.002	92	92	0.0	86	86	0.0	70 - 130	30	
p-Isopropyltoluene	ND	0.001	93	94	1.1	74	66	11.4	70 - 130	30	m
sec-Butylbenzene	ND	0.001	97	99	2.0	77	68	12.4	70 - 130	30	m
Styrene	ND	0.005	87	87	0.0	81	80	1.2	70 - 130	30	
tert-Butylbenzene	ND	0.001	95	96	1.0	79	71	10.7	70 - 130	30	
Tetrachloroethene	ND	0.005	96	96	0.0	87	84	3.5	70 - 130	30	
Tetrahydrofuran (THF)	ND	0.005	94	97	3.1	97	98	1.0	70 - 130	30	
Toluene	ND	0.001	100	101	1.0	95	94	1.1	70 - 130	30	
trans-1,2-Dichloroethene	ND	0.005	107	105	1.9	100	98	2.0	70 - 130	30	
trans-1,3-Dichloropropene	ND	0.005	87	88	1.1	83	84	1.2	70 - 130	30	

Parameter	Blank	Blk RL	LCS %	LCSD %	LCS RPD	MS %	MSD %	MS RPD	% Rec Limits	% RPD Limits	
trans-1,4-dichloro-2-butene	ND	0.005	77	80	3.8	74	72	2.7	70 - 130	30	
Trichloroethene	ND	0.005	98	100	2.0	92	93	1.1	70 - 130	30	
Trichlorofluoromethane	ND	0.005	111	110	0.9	103	101	2.0	70 - 130	30	
Trichlorotrifluoroethane	ND	0.005	110	110	0.0	106	101	4.8	70 - 130	30	
Vinyl chloride	ND	0.005	121	121	0.0	108	107	0.9	70 - 130	30	
% 1,2-dichlorobenzene-d4	95	%	101	102	1.0	101	100	1.0	70 - 130	30	
% Bromofluorobenzene	99	%	98	100	2.0	98	99	1.0	70 - 130	30	
% Dibromofluoromethane	91	%	92	91	1.1	92	89	3.3	70 - 130	30	
% Toluene-d8	91	%	104	104	0.0	103	102	1.0	70 - 130	30	

Comment:

Additional 8260 criteria: 10% of LCS/LCSD compounds can be outside of acceptance criteria as long as recovery is 40-160%.

QA/QC Batch 327328 (mg/Kg), QC Sample No: BK26258 2X (BK26207)

Pesticides - Soil

4,4' -DDD	ND	0.0017	103	106	2.9	90	80	11.8	40 - 140	30	
4,4' -DDE	ND	0.0017	89	94	5.5	76	70	8.2	40 - 140	30	
4,4' -DDT	ND	0.0017	81	82	1.2	68	63	7.6	40 - 140	30	
a-BHC	ND	0.001	101	106	4.8	94	91	3.2	40 - 140	30	
a-Chlordane	ND	0.0033	94	98	4.2	82	74	10.3	40 - 140	30	
Aldrin	ND	0.001	80	83	3.7	66	60	9.5	40 - 140	30	
b-BHC	ND	0.001	77	81	5.1	63	63	0.0	40 - 140	30	
Chlordane	ND	0.033	93	97	4.2	121	57	71.9	40 - 140	30	r
d-BHC	ND	0.0033	75	78	3.9	64	57	11.6	40 - 140	30	
Dieldrin	ND	0.001	80	81	1.2	69	61	12.3	40 - 140	30	
Endosulfan I	ND	0.0033	90	94	4.3	79	72	9.3	40 - 140	30	
Endosulfan II	ND	0.0033	84	90	6.9	74	68	8.5	40 - 140	30	
Endosulfan sulfate	ND	0.0033	76	86	12.3	68	64	6.1	40 - 140	30	
Endrin	ND	0.0033	92	94	2.2	80	73	9.2	40 - 140	30	
Endrin aldehyde	ND	0.0033	78	83	6.2	65	70	7.4	40 - 140	30	
Endrin ketone	ND	0.0033	99	96	3.1	85	73	15.2	40 - 140	30	
g-BHC	ND	0.001	93	98	5.2	81	77	5.1	40 - 140	30	
g-Chlordane	ND	0.0033	93	97	4.2	121	57	71.9	40 - 140	30	r
Heptachlor	ND	0.0033	85	90	5.7	73	67	8.6	40 - 140	30	
Heptachlor epoxide	ND	0.0033	89	95	6.5	76	69	9.7	40 - 140	30	
Methoxychlor	ND	0.0033	86	85	1.2	68	64	6.1	40 - 140	30	
Toxaphene	ND	0.13	NA	NA	NC	NA	NA	NC	40 - 140	30	
% DCBP	96	%	90	101	11.5	78	76	2.6	30 - 150	30	
% TCMX	95	%	89	93	4.4	79	82	3.7	30 - 150	30	

QA/QC Batch 327423 (mg/Kg), QC Sample No: BK26436 (BK26206, BK26207, BK26208)

Semivolatiles - Soil

1,2,4,5-Tetrachlorobenzene	ND	0.23	72	72	0.0	62	75	19.0	30 - 130	30	
1,2,4-Trichlorobenzene	ND	0.23	65	63	3.1	57	70	20.5	30 - 130	30	
1,2-Dichlorobenzene	ND	0.18	57	55	3.6	49	62	23.4	30 - 130	30	
1,2-Diphenylhydrazine	ND	0.23	83	85	2.4	68	78	13.7	30 - 130	30	
1,3-Dichlorobenzene	ND	0.23	54	52	3.8	47	59	22.6	30 - 130	30	
1,4-Dichlorobenzene	ND	0.23	55	54	1.8	49	60	20.2	30 - 130	30	
2,4,5-Trichlorophenol	ND	0.23	94	96	2.1	72	82	13.0	30 - 130	30	
2,4,6-Trichlorophenol	ND	0.13	90	92	2.2	71	82	14.4	30 - 130	30	
2,4-Dichlorophenol	ND	0.13	80	79	1.3	68	79	15.0	30 - 130	30	
2,4-Dimethylphenol	ND	0.23	76	72	5.4	67	78	15.2	30 - 130	30	
2,4-Dinitrophenol	ND	0.23	22	21	4.7	22	16	31.6	30 - 130	30	l,m,r
2,4-Dinitrotoluene	ND	0.13	100	105	4.9	81	94	14.9	30 - 130	30	

QA/QC Data

SDG I.D.: GBK26195

Parameter	Blank	Blk RL	LCS %	LCSD %	LCS RPD	MS %	MSD %	MS RPD	% Rec Limits	% RPD Limits	
2,6-Dinitrotoluene	ND	0.13	98	102	4.0	79	94	17.3	30 - 130	30	
2-Chloronaphthalene	ND	0.23	77	76	1.3	63	77	20.0	30 - 130	30	
2-Chlorophenol	ND	0.23	72	70	2.8	62	74	17.6	30 - 130	30	
2-Methylnaphthalene	ND	0.23	78	77	1.3	66	79	17.9	30 - 130	30	
2-Methylphenol (o-cresol)	ND	0.23	74	72	2.7	63	75	17.4	30 - 130	30	
2-Nitroaniline	ND	0.33	92	94	2.2	76	84	10.0	30 - 130	30	
2-Nitrophenol	ND	0.23	78	80	2.5	67	81	18.9	30 - 130	30	
3&4-Methylphenol (m&p-cresol)	ND	0.23	79	78	1.3	69	80	14.8	30 - 130	30	
3,3'-Dichlorobenzidine	ND	0.13	81	81	0.0	72	83	14.2	30 - 130	30	
3-Nitroaniline	ND	0.33	88	90	2.2	73	85	15.2	30 - 130	30	
4,6-Dinitro-2-methylphenol	ND	0.23	54	52	3.8	50	46	8.3	30 - 130	30	
4-Bromophenyl phenyl ether	ND	0.23	86	89	3.4	71	82	14.4	30 - 130	30	
4-Chloro-3-methylphenol	ND	0.23	89	89	0.0	74	84	12.7	30 - 130	30	
4-Chloroaniline	ND	0.23	75	75	0.0	65	74	12.9	30 - 130	30	
4-Chlorophenyl phenyl ether	ND	0.23	84	85	1.2	68	79	15.0	30 - 130	30	
4-Nitroaniline	ND	0.23	97	101	4.0	80	94	16.1	30 - 130	30	
4-Nitrophenol	ND	0.23	95	97	2.1	70	77	9.5	30 - 130	30	
Acenaphthene	ND	0.23	81	81	0.0	66	78	16.7	30 - 130	30	
Acenaphthylene	ND	0.13	79	79	0.0	64	76	17.1	30 - 130	30	
Acetophenone	ND	0.23	68	67	1.5	58	71	20.2	30 - 130	30	
Aniline	ND	0.33	63	63	0.0	56	67	17.9	30 - 130	30	
Anthracene	ND	0.23	90	91	1.1	73	84	14.0	30 - 130	30	
Benz(a)anthracene	ND	0.23	94	95	1.1	75	86	13.7	30 - 130	30	
Benzidine	ND	0.33	45	40	11.8	31	36	14.9	30 - 130	30	
Benzo(a)pyrene	ND	0.13	92	96	4.3	74	85	13.8	30 - 130	30	
Benzo(b)fluoranthene	ND	0.16	95	95	0.0	75	88	16.0	30 - 130	30	
Benzo(ghi)perylene	ND	0.23	99	97	2.0	77	90	15.6	30 - 130	30	
Benzo(k)fluoranthene	ND	0.23	98	97	1.0	76	87	13.5	30 - 130	30	
Benzoic Acid	ND	0.33	<10	<10	NC	<10	<10	NC	30 - 130	30	l,m
Benzyl butyl phthalate	ND	0.23	97	98	1.0	78	88	12.0	30 - 130	30	
Bis(2-chloroethoxy)methane	ND	0.23	74	73	1.4	63	75	17.4	30 - 130	30	
Bis(2-chloroethyl)ether	ND	0.13	59	57	3.4	51	63	21.1	30 - 130	30	
Bis(2-chloroisopropyl)ether	ND	0.23	62	59	5.0	52	65	22.2	30 - 130	30	
Bis(2-ethylhexyl)phthalate	ND	0.23	98	99	1.0	82	90	9.3	30 - 130	30	
Carbazole	ND	0.33	90	93	3.3	75	84	11.3	30 - 130	30	
Chrysene	ND	0.23	96	96	0.0	76	87	13.5	30 - 130	30	
Dibenz(a,h)anthracene	ND	0.13	96	98	2.1	76	89	15.8	30 - 130	30	
Dibenzofuran	ND	0.23	84	85	1.2	69	81	16.0	30 - 130	30	
Diethyl phthalate	ND	0.23	91	92	1.1	72	83	14.2	30 - 130	30	
Dimethylphthalate	ND	0.23	86	87	1.2	70	81	14.6	30 - 130	30	
Di-n-butylphthalate	ND	0.23	96	96	0.0	80	87	8.4	30 - 130	30	
Di-n-octylphthalate	ND	0.23	96	97	1.0	79	90	13.0	30 - 130	30	
Fluoranthene	ND	0.23	92	94	2.2	75	84	11.3	30 - 130	30	
Fluorene	ND	0.23	86	87	1.2	69	81	16.0	30 - 130	30	
Hexachlorobenzene	ND	0.13	85	86	1.2	68	78	13.7	30 - 130	30	
Hexachlorobutadiene	ND	0.23	64	62	3.2	56	69	20.8	30 - 130	30	
Hexachlorocyclopentadiene	ND	0.23	72	67	7.2	62	78	22.9	30 - 130	30	
Hexachloroethane	ND	0.13	54	52	3.8	47	59	22.6	30 - 130	30	
Indeno(1,2,3-cd)pyrene	ND	0.23	97	98	1.0	77	90	15.6	30 - 130	30	
Isophorone	ND	0.13	71	71	0.0	60	72	18.2	30 - 130	30	
Naphthalene	ND	0.23	67	66	1.5	58	70	18.8	30 - 130	30	
Nitrobenzene	ND	0.13	71	70	1.4	61	74	19.3	30 - 130	30	
N-Nitrosodimethylamine	ND	0.23	49	48	2.1	44	56	24.0	30 - 130	30	

QA/QC Data

SDG I.D.: GBK26195

Parameter	Blank	Blk RL	LCS %	LCSD %	LCS RPD	MS %	MSD %	MS RPD	% Rec Limits	% RPD Limits
N-Nitrosodi-n-propylamine	ND	0.13	74	73	1.4	62	74	17.6	30 - 130	30
N-Nitrosodiphenylamine	ND	0.13	90	92	2.2	73	84	14.0	30 - 130	30
Pentachloronitrobenzene	ND	0.23	94	98	4.2	77	87	12.2	30 - 130	30
Pentachlorophenol	ND	0.23	89	90	1.1	42	41	2.4	30 - 130	30
Phenanthrene	ND	0.13	88	89	1.1	72	82	13.0	30 - 130	30
Phenol	ND	0.23	73	72	1.4	63	75	17.4	30 - 130	30
Pyrene	ND	0.23	92	94	2.2	76	85	11.2	30 - 130	30
Pyridine	ND	0.23	33	31	6.3	30	36	18.2	30 - 130	30
% 2,4,6-Tribromophenol	67	%	86	87	1.2	67	75	11.3	30 - 130	30
% 2-Fluorobiphenyl	62	%	75	73	2.7	61	73	17.9	30 - 130	30
% 2-Fluorophenol	51	%	64	60	6.5	53	65	20.3	30 - 130	30
% Nitrobenzene-d5	53	%	67	67	0.0	57	70	20.5	30 - 130	30
% Phenol-d5	57	%	70	68	2.9	60	71	16.8	30 - 130	30
% Terphenyl-d14	87	%	91	92	1.1	72	81	11.8	30 - 130	30

Comment:

Additional 8270 criteria: 20% of compounds can be outside of acceptance criteria as long as recovery is at least 10%. (Acid surrogates acceptance range for aqueous samples: 15-110%, for soils 30-130%)

l = This parameter is outside laboratory LCS/LCSD specified recovery limits.
m = This parameter is outside laboratory MS/MSD specified recovery limits.
r = This parameter is outside laboratory RPD specified recovery limits.

If there are any questions regarding this data, please call Phoenix Client Services at extension 200.

RPD - Relative Percent Difference
LCS - Laboratory Control Sample
LCSD - Laboratory Control Sample Duplicate
MS - Matrix Spike
MS Dup - Matrix Spike Duplicate
NC - No Criteria
Intf - Interference

Phyllis Shiller, Laboratory Director
November 25, 2015

Sample Criteria Exceedences Report

GBK26195 - CREATENV

Criteria: NY: 375, 375NR, 375RRS, 375RS

State: NY

SampNo	Acode	Phoenix Analyte	Criteria	Result	RL	Criteria	RL Criteria	Analysis Units
BK26195	$8270-SMR	Chrysene	NY / 375-6.8 Semivolatiles / Residential	1100	290	1000	1000	ug/Kg
BK26195	$8270-SMR	Indeno(1,2,3-cd)pyrene	NY / 375-6.8 Semivolatiles / Residential	1100	290	500	500	ug/Kg
BK26195	$8270-SMR	Benzo(b)fluoranthene	NY / 375-6.8 Semivolatiles / Residential	1200	290	1000	1000	ug/Kg
BK26195	$8270-SMR	Benzo(b)fluoranthene	NY / 375-6.8 Semivolatiles / Residential Restricted	1200	290	1000	1000	ug/Kg
BK26195	$8270-SMR	Indeno(1,2,3-cd)pyrene	NY / 375-6.8 Semivolatiles / Residential Restricted	1100	290	500	500	ug/Kg
BK26195	$8270-SMR	Benzo(b)fluoranthene	NY / 375-6.8 Semivolatiles / Unrestricted Use Soil	1200	290	1000	1000	ug/Kg
BK26195	$8270-SMR	Chrysene	NY / 375-6.8 Semivolatiles / Unrestricted Use Soil	1100	290	1000	1000	ug/Kg
BK26195	$8270-SMR	Indeno(1,2,3-cd)pyrene	NY / 375-6.8 Semivolatiles / Unrestricted Use Soil	1100	290	500	500	ug/Kg
BK26195	$PCB_SMR	Total PCBs	NY / 375-6.8 PCBs/Pesticides / Commercial	16000	820	1000	1000	ug/Kg
BK26195	$PCB_SMR	Total PCBs	NY / 375-6.8 PCBs/Pesticides / Residential	16000	820	1000	1000	ug/Kg
BK26195	$PCB_SMR	Total PCBs	NY / 375-6.8 PCBs/Pesticides / Residential Restricted	16000	820	1000	1000	ug/Kg
BK26195	$PCB_SMR	PCB-1242	NY / 375-6.8 PCBs/Pesticides / Unrestricted Use Soil	ND	820	100	100	ug/Kg
BK26195	$PCB_SMR	Total PCBs	NY / 375-6.8 PCBs/Pesticides / Unrestricted Use Soil	16000	820	100	100	ug/Kg
BK26195	$PCB_SMR	PCB-1260	NY / 375-6.8 PCBs/Pesticides / Unrestricted Use Soil	*	820	100	100	ug/Kg
BK26195	$PCB_SMR	PCB-1248	NY / 375-6.8 PCBs/Pesticides / Unrestricted Use Soil	*	820	100	100	ug/Kg
BK26195	$PCB_SMR	PCB-1232	NY / 375-6.8 PCBs/Pesticides / Unrestricted Use Soil	ND	820	100	100	ug/Kg
BK26195	$PCB_SMR	PCB-1221	NY / 375-6.8 PCBs/Pesticides / Unrestricted Use Soil	ND	820	100	100	ug/Kg
BK26195	$PCB_SMR	PCB-1016	NY / 375-6.8 PCBs/Pesticides / Unrestricted Use Soil	ND	820	100	100	ug/Kg
BK26195	$PCB_SMR	PCB-1254	NY / 375-6.8 PCBs/Pesticides / Unrestricted Use Soil	*	820	100	100	ug/Kg
BK26195	$PESTSM_NY	Dieldrin	NY / 375-6.8 PCBs/Pesticides / Residential	ND	200	39	39	ug/Kg
BK26195	$PESTSM_NY	Aldrin	NY / 375-6.8 PCBs/Pesticides / Residential	ND	20	19	19	ug/Kg
BK26195	$PESTSM_NY	d-BHC	NY / 375-6.8 PCBs/Pesticides / Unrestricted Use Soil	ND	41	40	40	ug/Kg
BK26195	$PESTSM_NY	4,4' -DDD	NY / 375-6.8 PCBs/Pesticides / Unrestricted Use Soil	ND	400	3.3	3.3	ug/Kg
BK26195	$PESTSM_NY	Endrin	NY / 375-6.8 PCBs/Pesticides / Unrestricted Use Soil	ND	41	14	14	ug/Kg
BK26195	$PESTSM_NY	Dieldrin	NY / 375-6.8 PCBs/Pesticides / Unrestricted Use Soil	ND	200	5	5	ug/Kg
BK26195	$PESTSM_NY	b-BHC	NY / 375-6.8 PCBs/Pesticides / Unrestricted Use Soil	ND	41	36	36	ug/Kg
BK26195	$PESTSM_NY	Aldrin	NY / 375-6.8 PCBs/Pesticides / Unrestricted Use Soil	ND	20	5	5	ug/Kg
BK26195	$PESTSM_NY	a-BHC	NY / 375-6.8 PCBs/Pesticides / Unrestricted Use Soil	ND	41	20	20	ug/Kg
BK26195	$PESTSM_NY	4,4' -DDE	NY / 375-6.8 PCBs/Pesticides / Unrestricted Use Soil	ND	20	3.3	3.3	ug/Kg
BK26195	$PESTSM_NY	4,4' -DDT	NY / 375-6.8 PCBs/Pesticides / Unrestricted Use Soil	ND	500	3.3	3.3	ug/Kg
BK26195	AG-SM	Silver	NY / 375-6.8 Metals / Unrestricted Use Soil	3.98	0.41	2	2	mg/Kg
BK26195	AS-SM	Arsenic	NY / 375-6.8 Metals / Commercial	40.3	0.8	16	16	mg/Kg
BK26195	AS-SM	Arsenic	NY / 375-6.8 Metals / Residential	40.3	0.8	16	16	mg/Kg
BK26195	AS-SM	Arsenic	NY / 375-6.8 Metals / Residential Restricted	40.3	0.8	16	16	mg/Kg
BK26195	AS-SM	Arsenic	NY / 375-6.8 Metals / Unrestricted Use Soil	40.3	0.8	13	13	mg/Kg
BK26195	BA-SM	Barium	NY / 375-6.8 Metals / Commercial	1940	4.1	400	400	mg/Kg
BK26195	BA-SM	Barium	NY / 375-6.8 Metals / Residential	1940	4.1	350	350	mg/Kg
BK26195	BA-SM	Barium	NY / 375-6.8 Metals / Residential Restricted	1940	4.1	400	400	mg/Kg
BK26195	BA-SM	Barium	NY / 375-6.8 Metals / Unrestricted Use Soil	1940	4.1	350	350	mg/Kg
BK26195	CD-SM	Cadmium	NY / 375-6.8 Metals / Commercial	28.0	0.41	9.3	9.3	mg/Kg
BK26195	CD-SM	Cadmium	NY / 375-6.8 Metals / Residential	28.0	0.41	2.5	2.5	mg/Kg
BK26195	CD-SM	Cadmium	NY / 375-6.8 Metals / Residential Restricted	28.0	0.41	4.3	4.3	mg/Kg

Sample Criteria Exceedences Report

GBK26195 - CREATENV

Criteria: NY: 375, 375NR, 375RRS, 375RS

State: NY

SampNo	Acode	Phoenix Analyte	Criteria	Result	RL	Criteria	RL Criteria	Analysis Units
BK26195	CD-SM	Cadmium	NY / 375-6.8 Metals / Unrestricted Use Soil	28.0	0.41	2.5	2.5	mg/Kg
BK26195	CR-SM	Chromium	NY / 375-6.8 Metals / Unrestricted Use Soil	224	4.1	30		mg/Kg
BK26195	CU-SM	Copper	NY / 375-6.8 Metals / Commercial	1160	4.1	270	270	mg/kg
BK26195	CU-SM	Copper	NY / 375-6.8 Metals / Residential	1160	4.1	270	270	mg/kg
BK26195	CU-SM	Copper	NY / 375-6.8 Metals / Residential Restricted	1160	4.1	270	270	mg/kg
BK26195	CU-SM	Copper	NY / 375-6.8 Metals / Unrestricted Use Soil	1160	4.1	50	50	mg/kg
BK26195	HG-SM	Mercury	NY / 375-6.8 Metals / Commercial	5.66	0.32	2.8	2.8	mg/Kg
BK26195	HG-SM	Mercury	NY / 375-6.8 Metals / Residential	5.66	0.32	0.81	0.81	mg/Kg
BK26195	HG-SM	Mercury	NY / 375-6.8 Metals / Residential Restricted	5.66	0.32	0.81	0.81	mg/Kg
BK26195	HG-SM	Mercury	NY / 375-6.8 Metals / Unrestricted Use Soil	5.66	0.32	0.18	0.18	mg/Kg
BK26195	NI-SM	Nickel	NY / 375-6.8 Metals / Residential	253	4.1	140	140	mg/Kg
BK26195	NI-SM	Nickel	NY / 375-6.8 Metals / Unrestricted Use Soil	253	4.1	30	30	mg/Kg
BK26195	PB-SM	Lead	NY / 375-6.8 Metals / Commercial	4880	41	1000	1000	mg/Kg
BK26195	PB-SM	Lead	NY / 375-6.8 Metals / Residential	4880	41	400	400	mg/Kg
BK26195	PB-SM	Lead	NY / 375-6.8 Metals / Residential Restricted	4880	41	400	400	mg/Kg
BK26195	PB-SM	Lead	NY / 375-6.8 Metals / Unrestricted Use Soil	4880	41	63	63	mg/Kg
BK26195	ZN-SM	Zinc	NY / 375-6.8 Metals / Residential	5710	41	2200	2200	mg/Kg
BK26195	ZN-SM	Zinc	NY / 375-6.8 Metals / Unrestricted Use Soil	5710	41	109	109	mg/Kg
BK26196	BA-SM	Barium	NY / 375-6.8 Metals / Commercial	414	0.36	400	400	mg/Kg
BK26196	BA-SM	Barium	NY / 375-6.8 Metals / Residential	414	0.36	350	350	mg/Kg
BK26196	BA-SM	Barium	NY / 375-6.8 Metals / Residential Restricted	414	0.36	400	400	mg/Kg
BK26196	BA-SM	Barium	NY / 375-6.8 Metals / Unrestricted Use Soil	414	0.36	350	350	mg/Kg
BK26196	CD-SM	Cadmium	NY / 375-6.8 Metals / Residential	3.18	0.36	2.5	2.5	mg/Kg
BK26196	CD-SM	Cadmium	NY / 375-6.8 Metals / Unrestricted Use Soil	3.18	0.36	2.5	2.5	mg/Kg
BK26196	CR-SM	Chromium	NY / 375-6.8 Metals / Unrestricted Use Soil	85.2	0.36	30		mg/Kg
BK26196	HG-SM	Mercury	NY / 375-6.8 Metals / Unrestricted Use Soil	0.46	0.03	0.18	0.18	mg/Kg
BK26196	PB-SM	Lead	NY / 375-6.8 Metals / Commercial	1330	3.6	1000	1000	mg/Kg
BK26196	PB-SM	Lead	NY / 375-6.8 Metals / Residential	1330	3.6	400	400	mg/Kg
BK26196	PB-SM	Lead	NY / 375-6.8 Metals / Residential Restricted	1330	3.6	400	400	mg/Kg
BK26196	PB-SM	Lead	NY / 375-6.8 Metals / Unrestricted Use Soil	1330	3.6	63	63	mg/Kg
BK26196	ZN-SM	Zinc	NY / 375-6.8 Metals / Unrestricted Use Soil	787	3.6	109	109	mg/Kg
BK26197	$8260SMRNY	Total Xylenes	NY / 375-6.8 Volatiles / Unrestricted Use Soil	ND	550	260	260	ug/Kg
BK26197	$8260SMRNY	Vinyl chloride	NY / 375-6.8 Volatiles / Residential	ND	550	210	210	ug/Kg
BK26197	$8260SMRNY	Methyl t-butyl ether (MTBE)	NY / 375-6.8 Volatiles / Unrestricted Use Soil	ND	1100	930	930	ug/Kg
BK26197	$8260SMRNY	1,1-Dichloroethane	NY / 375-6.8 Volatiles / Unrestricted Use Soil	ND	550	270	270	ug/Kg
BK26197	$8260SMRNY	Vinyl chloride	NY / 375-6.8 Volatiles / Unrestricted Use Soil	ND	550	20	20	ug/Kg
BK26197	$8260SMRNY	Trichloroethene	NY / 375-6.8 Volatiles / Unrestricted Use Soil	ND	550	470	470	ug/Kg
BK26197	$8260SMRNY	trans-1,2-Dichloroethene	NY / 375-6.8 Volatiles / Unrestricted Use Soil	ND	550	190	190	ug/Kg
BK26197	$8260SMRNY	Methylene chloride	NY / 375-6.8 Volatiles / Unrestricted Use Soil	ND	1100	50	50	ug/Kg
BK26197	$8260SMRNY	cis-1,2-Dichloroethene	NY / 375-6.8 Volatiles / Unrestricted Use Soil	ND	550	250	250	ug/Kg

Sample Criteria Exceedences Report

GBK26195 - CREATENV

Criteria: NY: 375, 375NR, 375RRS, 375RS

State: NY

SampNo	Acode	Phoenix Analyte	Criteria	Result	RL	Criteria	RL Criteria	Analysis Units
BK26197	$8260SMRNY	Chloroform	NY / 375-6.8 Volatiles / Unrestricted Use Soil	ND	550	370	370	ug/Kg
BK26197	$8260SMRNY	Benzene	NY / 375-6.8 Volatiles / Unrestricted Use Soil	ND	550	60	60	ug/Kg
BK26197	$8260SMRNY	Acetone	NY / 375-6.8 Volatiles / Unrestricted Use Soil	ND	2800	50	50	ug/Kg
BK26197	$8260SMRNY	Methyl Ethyl Ketone	NY / 375-6.8 Volatiles / Unrestricted Use Soil	ND	2800	120	120	ug/Kg
BK26197	$8260SMRNY	1,1-Dichloroethene	NY / 375-6.8 Volatiles / Unrestricted Use Soil	ND	550	330	330	ug/Kg
BK26197	$8260SMRNY	1,2-Dichloroethane	NY / 375-6.8 Volatiles / Unrestricted Use Soil	ND	550	20	20	ug/Kg
BK26197	$8270-SMR	Chrysene	NY / 375-6.8 Semivolatiles / Residential	1300	260	1000	1000	ug/Kg
BK26197	$8270-SMR	Benzo(k)fluoranthene	NY / 375-6.8 Semivolatiles / Unrestricted Use Soil	910	260	800	800	ug/Kg
BK26197	$8270-SMR	Chrysene	NY / 375-6.8 Semivolatiles / Unrestricted Use Soil	1300	260	1000	1000	ug/Kg
BK26197	$PCB_SMR	PCB-1254	NY / 375-6.8 PCBs/Pesticides / Unrestricted Use Soil	170	75	100	100	ug/Kg
BK26197	CD-SM	Cadmium	NY / 375-6.8 Metals / Residential	2.77	0.37	2.5	2.5	mg/Kg
BK26197	CD-SM	Cadmium	NY / 375-6.8 Metals / Unrestricted Use Soil	2.77	0.37	2.5	2.5	mg/Kg
BK26197	CR-SM	Chromium	NY / 375-6.8 Metals / Unrestricted Use Soil	67.9	0.37	30		mg/Kg
BK26197	CU-SM	Copper	NY / 375-6.8 Metals / Unrestricted Use Soil	93.1	0.37	50	50	mg/kg
BK26197	HG-SM	Mercury	NY / 375-6.8 Metals / Residential	1.07	0.03	0.81	0.81	mg/Kg
BK26197	HG-SM	Mercury	NY / 375-6.8 Metals / Residential Restricted	1.07	0.03	0.81	0.81	mg/Kg
BK26197	HG-SM	Mercury	NY / 375-6.8 Metals / Unrestricted Use Soil	1.07	0.03	0.18	0.18	mg/Kg
BK26197	PB-SM	Lead	NY / 375-6.8 Metals / Unrestricted Use Soil	317	3.7	63	63	mg/Kg
BK26197	ZN-SM	Zinc	NY / 375-6.8 Metals / Unrestricted Use Soil	755	3.7	109	109	mg/Kg
BK26198	HG-SM	Mercury	NY / 375-6.8 Metals / Unrestricted Use Soil	0.66	0.03	0.18	0.18	mg/Kg
BK26198	PB-SM	Lead	NY / 375-6.8 Metals / Unrestricted Use Soil	90.1	0.38	63	63	mg/Kg
BK26199	$8270-SMR	Benzo(a)pyrene	NY / 375-6.8 Semivolatiles / Commercial	3600	260	1000	1000	ug/Kg
BK26199	$8270-SMR	Benzo(b)fluoranthene	NY / 375-6.8 Semivolatiles / Residential	3900	260	1000	1000	ug/Kg
BK26199	$8270-SMR	Dibenz(a,h)anthracene	NY / 375-6.8 Semivolatiles / Residential	450	260	330	330	ug/Kg
BK26199	$8270-SMR	Benzo(k)fluoranthene	NY / 375-6.8 Semivolatiles / Residential	2600	260	1000	1000	ug/Kg
BK26199	$8270-SMR	Chrysene	NY / 375-6.8 Semivolatiles / Residential	4400	260	1000	1000	ug/Kg
BK26199	$8270-SMR	Indeno(1,2,3-cd)pyrene	NY / 375-6.8 Semivolatiles / Residential	1900	260	500	500	ug/Kg
BK26199	$8270-SMR	Benz(a)anthracene	NY / 375-6.8 Semivolatiles / Residential	4100	260	1000	1000	ug/Kg
BK26199	$8270-SMR	Benzo(a)pyrene	NY / 375-6.8 Semivolatiles / Residential	3600	260	1000	1000	ug/Kg
BK26199	$8270-SMR	Indeno(1,2,3-cd)pyrene	NY / 375-6.8 Semivolatiles / Residential Restricted	1900	260	500	500	ug/Kg
BK26199	$8270-SMR	Dibenz(a,h)anthracene	NY / 375-6.8 Semivolatiles / Residential Restricted	450	260	330	330	ug/Kg
BK26199	$8270-SMR	Chrysene	NY / 375-6.8 Semivolatiles / Residential Restricted	4400	260	3900	3900	ug/Kg
BK26199	$8270-SMR	Benz(a)anthracene	NY / 375-6.8 Semivolatiles / Residential Restricted	4100	260	1000	1000	ug/Kg
BK26199	$8270-SMR	Benzo(b)fluoranthene	NY / 375-6.8 Semivolatiles / Residential Restricted	3900	260	1000	1000	ug/Kg
BK26199	$8270-SMR	Benzo(a)pyrene	NY / 375-6.8 Semivolatiles / Residential Restricted	3600	260	1000	1000	ug/Kg
BK26199	$8270-SMR	Benz(a)anthracene	NY / 375-6.8 Semivolatiles / Unrestricted Use Soil	4100	260	1000	1000	ug/Kg
BK26199	$8270-SMR	Benzo(b)fluoranthene	NY / 375-6.8 Semivolatiles / Unrestricted Use Soil	3900	260	1000	1000	ug/Kg
BK26199	$8270-SMR	Benzo(a)pyrene	NY / 375-6.8 Semivolatiles / Unrestricted Use Soil	3600	260	1000	1000	ug/Kg
BK26199	$8270-SMR	Dibenz(a,h)anthracene	NY / 375-6.8 Semivolatiles / Unrestricted Use Soil	450	260	330	330	ug/Kg
BK26199	$8270-SMR	Benzo(k)fluoranthene	NY / 375-6.8 Semivolatiles / Unrestricted Use Soil	2600	260	800	800	ug/Kg

Sample Criteria Exceedences Report

GBK26195 - CREATENV

Criteria: NY: 375, 375NR, 375RRS, 375RS

State: NY

SampNo	Acode	Phoenix Analyte	Criteria	Result	RL	Criteria	RL Criteria	Analysis Units
BK26199	$8270-SMR	Indeno(1,2,3-cd)pyrene	NY / 375-6.8 Semivolatiles / Unrestricted Use Soil	1900	260	500	500	ug/Kg
BK26199	$8270-SMR	Chrysene	NY / 375-6.8 Semivolatiles / Unrestricted Use Soil	4400	260	1000	1000	ug/Kg
BK26199	$PCB_SMR	Total PCBs	NY / 375-6.8 PCBs/Pesticides / Unrestricted Use Soil	430	74	100	100	ug/Kg
BK26199	$PESTSM_NY	4,4' -DDD	NY / 375-6.8 PCBs/Pesticides / Unrestricted Use Soil	ND	10	3.3	3.3	ug/Kg
BK26199	$PESTSM_NY	4,4' -DDT	NY / 375-6.8 PCBs/Pesticides / Unrestricted Use Soil	ND	15	3.3	3.3	ug/Kg
BK26199	BA-SM	Barium	NY / 375-6.8 Metals / Commercial	1810	3.6	400	400	mg/Kg
BK26199	BA-SM	Barium	NY / 375-6.8 Metals / Residential	1810	3.6	350	350	mg/Kg
BK26199	BA-SM	Barium	NY / 375-6.8 Metals / Residential Restricted	1810	3.6	400	400	mg/Kg
BK26199	BA-SM	Barium	NY / 375-6.8 Metals / Unrestricted Use Soil	1810	3.6	350	350	mg/Kg
BK26199	CD-SM	Cadmium	NY / 375-6.8 Metals / Residential	2.60	0.36	2.5	2.5	mg/Kg
BK26199	CD-SM	Cadmium	NY / 375-6.8 Metals / Unrestricted Use Soil	2.60	0.36	2.5	2.5	mg/Kg
BK26199	CU-SM	Copper	NY / 375-6.8 Metals / Unrestricted Use Soil	131	3.6	50	50	mg/kg
BK26199	HG-SM	Mercury	NY / 375-6.8 Metals / Unrestricted Use Soil	0.41	0.03	0.18	0.18	mg/Kg
BK26199	PB-SM	Lead	NY / 375-6.8 Metals / Commercial	5540	36	1000	1000	mg/Kg
BK26199	PB-SM	Lead	NY / 375-6.8 Metals / Residential	5540	36	400	400	mg/Kg
BK26199	PB-SM	Lead	NY / 375-6.8 Metals / Residential Restricted	5540	36	400	400	mg/Kg
BK26199	PB-SM	Lead	NY / 375-6.8 Metals / Unrestricted Use Soil	5540	36	63	63	mg/Kg
BK26199	ZN-SM	Zinc	NY / 375-6.8 Metals / Residential	2940	36	2200	2200	mg/Kg
BK26199	ZN-SM	Zinc	NY / 375-6.8 Metals / Unrestricted Use Soil	2940	36	109	109	mg/Kg
BK26200	CU-SM	Copper	NY / 375-6.8 Metals / Unrestricted Use Soil	60.0	0.34	50	50	mg/kg
BK26200	HG-SM	Mercury	NY / 375-6.8 Metals / Commercial	12.8	0.28	2.8	2.8	mg/Kg
BK26200	HG-SM	Mercury	NY / 375-6.8 Metals / Residential	12.8	0.28	0.81	0.81	mg/Kg
BK26200	HG-SM	Mercury	NY / 375-6.8 Metals / Residential Restricted	12.8	0.28	0.81	0.81	mg/Kg
BK26200	HG-SM	Mercury	NY / 375-6.8 Metals / Unrestricted Use Soil	12.8	0.28	0.18	0.18	mg/Kg
BK26200	PB-SM	Lead	NY / 375-6.8 Metals / Unrestricted Use Soil	120	0.34	63	63	mg/Kg
BK26201	AS-SM	Arsenic	NY / 375-6.8 Metals / Commercial	25.8	0.7	16	16	mg/Kg
BK26201	AS-SM	Arsenic	NY / 375-6.8 Metals / Residential	25.8	0.7	16	16	mg/Kg
BK26201	AS-SM	Arsenic	NY / 375-6.8 Metals / Residential Restricted	25.8	0.7	16	16	mg/Kg
BK26201	AS-SM	Arsenic	NY / 375-6.8 Metals / Unrestricted Use Soil	25.8	0.7	13	13	mg/Kg
BK26201	CR-SM	Chromium	NY / 375-6.8 Metals / Unrestricted Use Soil	45.5	0.33	30		mg/Kg
BK26201	CU-SM	Copper	NY / 375-6.8 Metals / Unrestricted Use Soil	135	3.3	50	50	mg/kg
BK26201	HG-SM	Mercury	NY / 375-6.8 Metals / Residential	0.89	0.03	0.81	0.81	mg/Kg
BK26201	HG-SM	Mercury	NY / 375-6.8 Metals / Residential Restricted	0.89	0.03	0.81	0.81	mg/Kg
BK26201	HG-SM	Mercury	NY / 375-6.8 Metals / Unrestricted Use Soil	0.89	0.03	0.18	0.18	mg/Kg
BK26201	PB-SM	Lead	NY / 375-6.8 Metals / Unrestricted Use Soil	340	3.3	63	63	mg/Kg
BK26201	ZN-SM	Zinc	NY / 375-6.8 Metals / Unrestricted Use Soil	759	3.3	109	109	mg/Kg
BK26203	CD-SM	Cadmium	NY / 375-6.8 Metals / Commercial	14.2	0.32	9.3	9.3	mg/Kg
BK26203	CD-SM	Cadmium	NY / 375-6.8 Metals / Residential	14.2	0.32	2.5	2.5	mg/Kg
BK26203	CD-SM	Cadmium	NY / 375-6.8 Metals / Residential Restricted	14.2	0.32	4.3	4.3	mg/Kg
BK26203	CD-SM	Cadmium	NY / 375-6.8 Metals / Unrestricted Use Soil	14.2	0.32	2.5	2.5	mg/Kg

Sample Criteria Exceedences Report

GBK26195 - CREATENV

Criteria: NY: 375, 375NR, 375RRS, 375RS

State: NY

SampNo	Acode	Phoenix Analyte	Criteria	Result	RL	Criteria	RL Criteria	Analysis Units
BK26203	CU-SM	Copper	NY / 375-6.8 Metals / Unrestricted Use Soil	143	3.2	50	50	mg/kg
BK26203	HG-SM	Mercury	NY / 375-6.8 Metals / Residential	0.99	0.03	0.81	0.81	mg/Kg
BK26203	HG-SM	Mercury	NY / 375-6.8 Metals / Residential Restricted	0.99	0.03	0.81	0.81	mg/Kg
BK26203	HG-SM	Mercury	NY / 375-6.8 Metals / Unrestricted Use Soil	0.99	0.03	0.18	0.18	mg/Kg
BK26203	PB-SM	Lead	NY / 375-6.8 Metals / Residential	986	32	400	400	mg/Kg
BK26203	PB-SM	Lead	NY / 375-6.8 Metals / Residential Restricted	986	32	400	400	mg/Kg
BK26203	PB-SM	Lead	NY / 375-6.8 Metals / Unrestricted Use Soil	986	32	63	63	mg/Kg
BK26203	ZN-SM	Zinc	NY / 375-6.8 Metals / Unrestricted Use Soil	874	3.2	109	109	mg/Kg
BK26204	HG-SM	Mercury	NY / 375-6.8 Metals / Unrestricted Use Soil	0.61	0.03	0.18	0.18	mg/Kg
BK26204	PB-SM	Lead	NY / 375-6.8 Metals / Unrestricted Use Soil	71.0	0.36	63	63	mg/Kg
BK26204	ZN-SM	Zinc	NY / 375-6.8 Metals / Unrestricted Use Soil	487	3.6	109	109	mg/Kg
BK26205	$PCB_SMR	Total PCBs	NY / 375-6.8 PCBs/Pesticides / Commercial	2000	370	1000	1000	ug/Kg
BK26205	$PCB_SMR	Total PCBs	NY / 375-6.8 PCBs/Pesticides / Residential	2000	370	1000	1000	ug/Kg
BK26205	$PCB_SMR	Total PCBs	NY / 375-6.8 PCBs/Pesticides / Residential Restricted	2000	370	1000	1000	ug/Kg
BK26205	$PCB_SMR	PCB-1242	NY / 375-6.8 PCBs/Pesticides / Unrestricted Use Soil	ND	370	100	100	ug/Kg
BK26205	$PCB_SMR	Total PCBs	NY / 375-6.8 PCBs/Pesticides / Unrestricted Use Soil	2000	370	100	100	ug/Kg
BK26205	$PCB_SMR	PCB-1260	NY / 375-6.8 PCBs/Pesticides / Unrestricted Use Soil	*	370	100	100	ug/Kg
BK26205	$PCB_SMR	PCB-1248	NY / 375-6.8 PCBs/Pesticides / Unrestricted Use Soil	*	370	100	100	ug/Kg
BK26205	$PCB_SMR	PCB-1232	NY / 375-6.8 PCBs/Pesticides / Unrestricted Use Soil	ND	370	100	100	ug/Kg
BK26205	$PCB_SMR	PCB-1221	NY / 375-6.8 PCBs/Pesticides / Unrestricted Use Soil	ND	370	100	100	ug/Kg
BK26205	$PCB_SMR	PCB-1016	NY / 375-6.8 PCBs/Pesticides / Unrestricted Use Soil	ND	370	100	100	ug/Kg
BK26205	$PCB_SMR	PCB-1254	NY / 375-6.8 PCBs/Pesticides / Unrestricted Use Soil	*	370	100	100	ug/Kg
BK26205	$PESTSM_NY	4,4' -DDE	NY / 375-6.8 PCBs/Pesticides / Unrestricted Use Soil	ND	19	3.3	3.3	ug/Kg
BK26205	$PESTSM_NY	Endrin	NY / 375-6.8 PCBs/Pesticides / Unrestricted Use Soil	ND	37	14	14	ug/Kg
BK26205	$PESTSM_NY	Dieldrin	NY / 375-6.8 PCBs/Pesticides / Unrestricted Use Soil	ND	22	5	5	ug/Kg
BK26205	$PESTSM_NY	Aldrin	NY / 375-6.8 PCBs/Pesticides / Unrestricted Use Soil	ND	11	5	5	ug/Kg
BK26205	$PESTSM_NY	4,4' -DDD	NY / 375-6.8 PCBs/Pesticides / Unrestricted Use Soil	ND	22	3.3	3.3	ug/Kg
BK26205	$PESTSM_NY	4,4' -DDT	NY / 375-6.8 PCBs/Pesticides / Unrestricted Use Soil	ND	22	3.3	3.3	ug/Kg
BK26205	CD-SM	Cadmium	NY / 375-6.8 Metals / Residential	4.27	0.36	2.5	2.5	mg/Kg
BK26205	CD-SM	Cadmium	NY / 375-6.8 Metals / Unrestricted Use Soil	4.27	0.36	2.5	2.5	mg/Kg
BK26205	CR-SM	Chromium	NY / 375-6.8 Metals / Unrestricted Use Soil	33.1	0.36	30		mg/Kg
BK26205	CU-SM	Copper	NY / 375-6.8 Metals / Unrestricted Use Soil	219	3.6	50	50	mg/kg
BK26205	HG-SM	Mercury	NY / 375-6.8 Metals / Residential	1.39	0.03	0.81	0.81	mg/Kg
BK26205	HG-SM	Mercury	NY / 375-6.8 Metals / Residential Restricted	1.39	0.03	0.81	0.81	mg/Kg
BK26205	HG-SM	Mercury	NY / 375-6.8 Metals / Unrestricted Use Soil	1.39	0.03	0.18	0.18	mg/Kg
BK26205	PB-SM	Lead	NY / 375-6.8 Metals / Residential	904	3.6	400	400	mg/Kg
BK26205	PB-SM	Lead	NY / 375-6.8 Metals / Residential Restricted	904	3.6	400	400	mg/Kg
BK26205	PB-SM	Lead	NY / 375-6.8 Metals / Unrestricted Use Soil	904	3.6	63	63	mg/Kg
BK26205	ZN-SM	Zinc	NY / 375-6.8 Metals / Unrestricted Use Soil	885	3.6	109	109	mg/Kg
BK26206	$8260SMRNY	Total Xylenes	NY / 375-6.8 Volatiles / Unrestricted Use Soil	ND	600	260	260	ug/Kg

Sample Criteria Exceedences Report

GBK26195 - CREATENV

Criteria: NY: 375, 375NR, 375RRS, 375RS

State: NY

SampNo	Acode	Phoenix Analyte	Criteria	Result	RL	Criteria	RL Criteria	Analysis Units
BK26206	$8260SMRNY	Vinyl chloride	NY / 375-6.8 Volatiles / Residential	ND	600	210	210	ug/Kg
BK26206	$8260SMRNY	Methyl t-butyl ether (MTBE)	NY / 375-6.8 Volatiles / Unrestricted Use Soil	ND	1200	930	930	ug/Kg
BK26206	$8260SMRNY	Trichloroethene	NY / 375-6.8 Volatiles / Unrestricted Use Soil	ND	600	470	470	ug/Kg
BK26206	$8260SMRNY	trans-1,2-Dichloroethene	NY / 375-6.8 Volatiles / Unrestricted Use Soil	ND	600	190	190	ug/Kg
BK26206	$8260SMRNY	Acetone	NY / 375-6.8 Volatiles / Unrestricted Use Soil	ND	3000	50	50	ug/Kg
BK26206	$8260SMRNY	Vinyl chloride	NY / 375-6.8 Volatiles / Unrestricted Use Soil	ND	600	20	20	ug/Kg
BK26206	$8260SMRNY	Methylene chloride	NY / 375-6.8 Volatiles / Unrestricted Use Soil	ND	1200	50	50	ug/Kg
BK26206	$8260SMRNY	Methyl Ethyl Ketone	NY / 375-6.8 Volatiles / Unrestricted Use Soil	ND	3000	120	120	ug/Kg
BK26206	$8260SMRNY	cis-1,2-Dichloroethene	NY / 375-6.8 Volatiles / Unrestricted Use Soil	ND	600	250	250	ug/Kg
BK26206	$8260SMRNY	Benzene	NY / 375-6.8 Volatiles / Unrestricted Use Soil	ND	600	60	60	ug/Kg
BK26206	$8260SMRNY	1,2-Dichloroethane	NY / 375-6.8 Volatiles / Unrestricted Use Soil	ND	600	20	20	ug/Kg
BK26206	$8260SMRNY	1,1-Dichloroethene	NY / 375-6.8 Volatiles / Unrestricted Use Soil	ND	600	330	330	ug/Kg
BK26206	$8260SMRNY	1,1-Dichloroethane	NY / 375-6.8 Volatiles / Unrestricted Use Soil	ND	600	270	270	ug/Kg
BK26206	$8260SMRNY	Chloroform	NY / 375-6.8 Volatiles / Unrestricted Use Soil	ND	600	370	370	ug/Kg
BK26206	$8270-SMR	Benzo(a)pyrene	NY / 375-6.8 Semivolatiles / Commercial	1400	250	1000	1000	ug/Kg
BK26206	$8270-SMR	Benzo(b)fluoranthene	NY / 375-6.8 Semivolatiles / Residential	1700	250	1000	1000	ug/Kg
BK26206	$8270-SMR	Benz(a)anthracene	NY / 375-6.8 Semivolatiles / Residential	1700	250	1000	1000	ug/Kg
BK26206	$8270-SMR	Indeno(1,2,3-cd)pyrene	NY / 375-6.8 Semivolatiles / Residential	870	250	500	500	ug/Kg
BK26206	$8270-SMR	Benzo(a)pyrene	NY / 375-6.8 Semivolatiles / Residential	1400	250	1000	1000	ug/Kg
BK26206	$8270-SMR	Chrysene	NY / 375-6.8 Semivolatiles / Residential	2300	250	1000	1000	ug/Kg
BK26206	$8270-SMR	Benzo(k)fluoranthene	NY / 375-6.8 Semivolatiles / Residential	1100	250	1000	1000	ug/Kg
BK26206	$8270-SMR	Indeno(1,2,3-cd)pyrene	NY / 375-6.8 Semivolatiles / Residential Restricted	870	250	500	500	ug/Kg
BK26206	$8270-SMR	Benzo(a)pyrene	NY / 375-6.8 Semivolatiles / Residential Restricted	1400	250	1000	1000	ug/Kg
BK26206	$8270-SMR	Benz(a)anthracene	NY / 375-6.8 Semivolatiles / Residential Restricted	1700	250	1000	1000	ug/Kg
BK26206	$8270-SMR	Benzo(b)fluoranthene	NY / 375-6.8 Semivolatiles / Residential Restricted	1700	250	1000	1000	ug/Kg
BK26206	$8270-SMR	Benzo(b)fluoranthene	NY / 375-6.8 Semivolatiles / Unrestricted Use Soil	1700	250	1000	1000	ug/Kg
BK26206	$8270-SMR	Benzo(k)fluoranthene	NY / 375-6.8 Semivolatiles / Unrestricted Use Soil	1100	250	800	800	ug/Kg
BK26206	$8270-SMR	Benzo(a)pyrene	NY / 375-6.8 Semivolatiles / Unrestricted Use Soil	1400	250	1000	1000	ug/Kg
BK26206	$8270-SMR	Chrysene	NY / 375-6.8 Semivolatiles / Unrestricted Use Soil	2300	250	1000	1000	ug/Kg
BK26206	$8270-SMR	Benz(a)anthracene	NY / 375-6.8 Semivolatiles / Unrestricted Use Soil	1700	250	1000	1000	ug/Kg
BK26206	$8270-SMR	Indeno(1,2,3-cd)pyrene	NY / 375-6.8 Semivolatiles / Unrestricted Use Soil	870	250	500	500	ug/Kg
BK26206	$PCB_SMR	Total PCBs	NY / 375-6.8 PCBs/Pesticides / Commercial	2600	720	1000	1000	ug/Kg
BK26206	$PCB_SMR	Total PCBs	NY / 375-6.8 PCBs/Pesticides / Residential	2600	720	1000	1000	ug/Kg
BK26206	$PCB_SMR	Total PCBs	NY / 375-6.8 PCBs/Pesticides / Residential Restricted	2600	720	1000	1000	ug/Kg
BK26206	$PCB_SMR	PCB-1248	NY / 375-6.8 PCBs/Pesticides / Unrestricted Use Soil	*	720	100	100	ug/Kg
BK26206	$PCB_SMR	PCB-1254	NY / 375-6.8 PCBs/Pesticides / Unrestricted Use Soil	*	720	100	100	ug/Kg
BK26206	$PCB_SMR	PCB-1260	NY / 375-6.8 PCBs/Pesticides / Unrestricted Use Soil	*	720	100	100	ug/Kg
BK26206	$PCB_SMR	PCB-1232	NY / 375-6.8 PCBs/Pesticides / Unrestricted Use Soil	ND	720	100	100	ug/Kg
BK26206	$PCB_SMR	Total PCBs	NY / 375-6.8 PCBs/Pesticides / Unrestricted Use Soil	2600	720	100	100	ug/Kg
BK26206	$PCB_SMR	PCB-1221	NY / 375-6.8 PCBs/Pesticides / Unrestricted Use Soil	ND	720	100	100	ug/Kg
BK26206	$PCB_SMR	PCB-1016	NY / 375-6.8 PCBs/Pesticides / Unrestricted Use Soil	ND	720	100	100	ug/Kg
BK26206	$PCB_SMR	PCB-1242	NY / 375-6.8 PCBs/Pesticides / Unrestricted Use Soil	ND	720	100	100	ug/Kg

Sample Criteria Exceedences Report

GBK26195 - CREATENV

Criteria: NY: 375, 375NR, 375RRS, 375RS

State: NY

SampNo	Acode	Phoenix Analyte	Criteria	Result	RL	Criteria	RL Criteria	Analysis Units
BK26206	$PESTSM_NY	Aldrin	NY / 375-6.8 PCBs/Pesticides / Unrestricted Use Soil	ND	18	5	5	ug/Kg
BK26206	$PESTSM_NY	Dieldrin	NY / 375-6.8 PCBs/Pesticides / Unrestricted Use Soil	ND	36	5	5	ug/Kg
BK26206	$PESTSM_NY	4,4' -DDT	NY / 375-6.8 PCBs/Pesticides / Unrestricted Use Soil	61	22	3.3	3.3	ug/Kg
BK26206	$PESTSM_NY	4,4' -DDE	NY / 375-6.8 PCBs/Pesticides / Unrestricted Use Soil	ND	22	3.3	3.3	ug/Kg
BK26206	$PESTSM_NY	4,4' -DDD	NY / 375-6.8 PCBs/Pesticides / Unrestricted Use Soil	43	22	3.3	3.3	ug/Kg
BK26206	$PESTSM_NY	Endrin	NY / 375-6.8 PCBs/Pesticides / Unrestricted Use Soil	ND	36	14	14	ug/Kg
BK26206	AG-SM	Silver	NY / 375-6.8 Metals / Unrestricted Use Soil	6.69	0.34	2	2	mg/Kg
BK26206	AS-SM	Arsenic	NY / 375-6.8 Metals / Commercial	23.9	0.7	16	16	mg/Kg
BK26206	AS-SM	Arsenic	NY / 375-6.8 Metals / Residential	23.9	0.7	16	16	mg/Kg
BK26206	AS-SM	Arsenic	NY / 375-6.8 Metals / Residential Restricted	23.9	0.7	16	16	mg/Kg
BK26206	AS-SM	Arsenic	NY / 375-6.8 Metals / Unrestricted Use Soil	23.9	0.7	13	13	mg/Kg
BK26206	BA-SM	Barium	NY / 375-6.8 Metals / Commercial	661	0.34	400	400	mg/Kg
BK26206	BA-SM	Barium	NY / 375-6.8 Metals / Residential	661	0.34	350	350	mg/Kg
BK26206	BA-SM	Barium	NY / 375-6.8 Metals / Residential Restricted	661	0.34	400	400	mg/Kg
BK26206	BA-SM	Barium	NY / 375-6.8 Metals / Unrestricted Use Soil	661	0.34	350	350	mg/Kg
BK26206	CD-SM	Cadmium	NY / 375-6.8 Metals / Commercial	18.1	0.34	9.3	9.3	mg/Kg
BK26206	CD-SM	Cadmium	NY / 375-6.8 Metals / Residential	18.1	0.34	2.5	2.5	mg/Kg
BK26206	CD-SM	Cadmium	NY / 375-6.8 Metals / Residential Restricted	18.1	0.34	4.3	4.3	mg/Kg
BK26206	CD-SM	Cadmium	NY / 375-6.8 Metals / Unrestricted Use Soil	18.1	0.34	2.5	2.5	mg/Kg
BK26206	CR-SM	Chromium	NY / 375-6.8 Metals / Unrestricted Use Soil	112	0.34	30		mg/Kg
BK26206	CU-SM	Copper	NY / 375-6.8 Metals / Commercial	1140	3.4	270	270	mg/kg
BK26206	CU-SM	Copper	NY / 375-6.8 Metals / Residential	1140	3.4	270	270	mg/kg
BK26206	CU-SM	Copper	NY / 375-6.8 Metals / Residential Restricted	1140	3.4	270	270	mg/kg
BK26206	CU-SM	Copper	NY / 375-6.8 Metals / Unrestricted Use Soil	1140	3.4	50	50	mg/kg
BK26206	HG-SM	Mercury	NY / 375-6.8 Metals / Commercial	7.21	0.14	2.8	2.8	mg/Kg
BK26206	HG-SM	Mercury	NY / 375-6.8 Metals / Residential	7.21	0.14	0.81	0.81	mg/Kg
BK26206	HG-SM	Mercury	NY / 375-6.8 Metals / Residential Restricted	7.21	0.14	0.81	0.81	mg/Kg
BK26206	HG-SM	Mercury	NY / 375-6.8 Metals / Unrestricted Use Soil	7.21	0.14	0.18	0.18	mg/Kg
BK26206	NI-SM	Nickel	NY / 375-6.8 Metals / Unrestricted Use Soil	128	0.34	30	30	mg/Kg
BK26206	PB-SM	Lead	NY / 375-6.8 Metals / Commercial	1930	35	1000	1000	mg/Kg
BK26206	PB-SM	Lead	NY / 375-6.8 Metals / Residential	1930	35	400	400	mg/Kg
BK26206	PB-SM	Lead	NY / 375-6.8 Metals / Residential Restricted	1930	35	400	400	mg/Kg
BK26206	PB-SM	Lead	NY / 375-6.8 Metals / Unrestricted Use Soil	1930	35	63	63	mg/Kg
BK26206	ZN-SM	Zinc	NY / 375-6.8 Metals / Residential	2410	35	2200	2200	mg/Kg
BK26206	ZN-SM	Zinc	NY / 375-6.8 Metals / Unrestricted Use Soil	2410	35	109	109	mg/Kg
BK26207	$PCB_SMR	PCB-1016	NY / 375-6.8 PCBs/Pesticides / Unrestricted Use Soil	ND	750	100	100	ug/Kg
BK26207	$PCB_SMR	PCB-1221	NY / 375-6.8 PCBs/Pesticides / Unrestricted Use Soil	ND	750	100	100	ug/Kg
BK26207	$PCB_SMR	PCB-1232	NY / 375-6.8 PCBs/Pesticides / Unrestricted Use Soil	ND	750	100	100	ug/Kg
BK26207	$PCB_SMR	PCB-1242	NY / 375-6.8 PCBs/Pesticides / Unrestricted Use Soil	ND	750	100	100	ug/Kg
BK26207	$PCB_SMR	PCB-1248	NY / 375-6.8 PCBs/Pesticides / Unrestricted Use Soil	ND	750	100	100	ug/Kg
BK26207	$PCB_SMR	PCB-1254	NY / 375-6.8 PCBs/Pesticides / Unrestricted Use Soil	ND	750	100	100	ug/Kg

Sample Criteria Exceedences Report

GBK26195 - CREATENV

Criteria: NY: 375, 375NR, 375RRS, 375RS

State: NY

SampNo	Acode	Phoenix Analyte	Criteria	Result	RL	Criteria	RL Criteria	Analysis Units
BK26207	$PCB_SMR	PCB-1260	NY / 375-6.8 PCBs/Pesticides / Unrestricted Use Soil	ND	750	100	100	ug/Kg
BK26207	AG-SM	Silver	NY / 375-6.8 Metals / Unrestricted Use Soil	4.18	0.38	2	2	mg/Kg
BK26207	CU-SM	Copper	NY / 375-6.8 Metals / Unrestricted Use Soil	135	0.38	50	50	mg/kg
BK26207	HG-SM	Mercury	NY / 375-6.8 Metals / Unrestricted Use Soil	0.47	0.03	0.18	0.18	mg/Kg
BK26207	PB-SM	Lead	NY / 375-6.8 Metals / Unrestricted Use Soil	200	3.8	63	63	mg/Kg
BK26207	ZN-SM	Zinc	NY / 375-6.8 Metals / Unrestricted Use Soil	340	3.8	109	109	mg/Kg
BK26208	HG-SM	Mercury	NY / 375-6.8 Metals / Residential	0.85	0.03	0.81	0.81	mg/Kg
BK26208	HG-SM	Mercury	NY / 375-6.8 Metals / Residential Restricted	0.85	0.03	0.81	0.81	mg/Kg
BK26208	HG-SM	Mercury	NY / 375-6.8 Metals / Unrestricted Use Soil	0.85	0.03	0.18	0.18	mg/Kg
BK26208	PB-SM	Lead	NY / 375-6.8 Metals / Unrestricted Use Soil	152	0.38	63	63	mg/Kg
BK26208	ZN-SM	Zinc	NY / 375-6.8 Metals / Unrestricted Use Soil	219	3.8	109	109	mg/Kg

Phoenix Laboratories does not assume responsibility for the data contained in this report. It is provided as an additional tool to identify requested criteria exceedences. All efforts are made to ensure the accuracy of the data (obtained from appropriate agencies). A lack of exceedence information does not necessarily suggest conformance to the criteria. It is ultimately the site professional's responsibility to determine appropriate compliance.

Environmental Laboratories, Inc.
587 East Middle Turnpike, P.O.Box 370, Manchester, CT 06045
Tel. (860) 645-1102 Fax (860) 645-0823

NY Temperature Narration

November 25, 2015

SDG I.D.: GBK26195

The samples in this delivery group were received at 5°C.
(Note acceptance criteria is above freezing up to 6°C)

Cooler: Yes [X] No [ ]
Coolant: IPK [X] ICE [ ] No [ ]
Temp 6 °C Pg of

PHOENIX Environmental Laboratories, Inc.

NY/NJ CHAIN OF CUSTODY RECORD

587 East Middle Turnpike, P.O. Box 370, Manchester, CT 06040
Email: info@phoenixlabs.com Fax (860) 645-0823
Client Services (860) 645-8726

Contact Options:
[ ] Fax:
[ ] Phone:
[X] Email: mmccormack@cesgatr.com

Customer: CES
Address: 39 W 37th Street
NY, NY 10018

Project: 526 Union Ave
Report to: aarrigo@cescenter.com
Invoice to: "

Project P.O:

This section MUST be completed with Bottle Quantities.

Sampler's Signature: [signature] Date: 11/18/15

Client Sample - Information - Identification

Matrix Code:
DW=Drinking Water **GW**=Ground Water **SW**=Surface Water **WW**=Waste Water
RW=Raw Water **SE**=Sediment **SL**=Sludge **S**=Soil **SD**=Solid **W**=Wipe
OIL=Oil **B**=Bulk **L**=Liquid

Analysis Request

PHOENIX USE ONLY SAMPLE #	Customer Sample Identification	Sample Matrix	Date Sampled	Time Sampled	VOCs EPA 8260	SVOCs EPA 8270	PCBs 8081	Pesticides 8082	TAL metals 6010	Soil VOA Vials [ ] methanol [ ] H2O 3	GL Soil container (8)oz 1	GL Soil container (4)oz 1	40 ml VOA Vial [ ] As is [ ] HCl	GL Amber 1000ml [ ] As is [ ] H2SO4	PL As is [ ] 250ml [ ] 500ml [ ] 1000ml	PL H2SO4 [ ] 250ml [ ] 250ml [ ] 500ml	PL HNO3 250ml	PL NaOH 250ml	Bacteria Bottle
26195	SB1_0_2	S	11/18	10:00	—	—	—	—			—	—	—						
26196	SB1_5_7	S	11/18	10:20	—	—	—	—			—	—	—						
26197	SB3_0_5	S	11/18	11:48	—	—	—	—			—	—	—						
26198	SB3_7_8	S	11/18	12:00	—	—	—	—			—	—	—						
26199	SB2_0_2	S	11/18	12:16	—	—	—	—			—	—	—						
26200	SB2_5_7	S	11/18	12:31	—	—	—	—			—	—	—						
26201	SB4_0_2	S	11/18	12:47	—	—	—	—			—	—	—						
26202	SB4_5_7	S	11/18	13:13	—	—	—	—			—	—	—						
26203	SB5_0_2	S	11/18	14:15	—	—	—	—			—	—	—						
26204	SB5_5_7	S	11/18	14:20	—	—	—	—			—	—	—						
26205	SB6_0_2	S	11/18	15:00	—	—	—	—			—	—	—						

Relinquished by:	Accepted by:	Date:	Time:
M. McCormack	[signature]	11-19-15	12:08
[signature]	CParadise	11/19/15	1704

Comments, Special Requirements or Regulations:

Turnaround:
[ ] 1 Day*
[ ] 2 Days*
[ ] 3 Days*
[ ] 5 Days
[ ] 10 Days
[ ] Other
* SURCHARGE APPLIES
Per Contract

NJ
[ ] Res. Criteria
[ ] Non-Res. Criteria
[ ] Impact to GW Soil Cleanup Criteria
[ ] GW Criteria

NY
[ ] TAGM 4046 GW
[ ] TAGM 4046 SOIL
[X] NY375 Unrestricted Use Soil
[X] NY375 Residential Soil
[X] Restricted/Residential
[X] Commercial
[X] Industrial

Data Format
[X] Phoenix Std Report
[X] Excel
[X] PDF
[ ] GIS/Key
[X] EQuIS
[ ] NJ Hazsite EDD
[ ] NY EZ EDD (ASP)
[ ] Other
Per Contract

Data Package
[ ] NJ Reduced Deliv. *
[ ] NY Enhanced (ASP B) *
[ ] Other

State where samples were collected: NY

Cooler: Yes [X] No [ ]
Coolant: IPK [X] ICE [ ] No [ ]
Temp 5 °C Pg of

PHOENIX Environmental Laboratories, Inc.

NY/NJ CHAIN OF CUSTODY RECORD

587 East Middle Turnpike, P.O. Box 370, Manchester, CT 06040
Email: info@phoenixlabs.com Fax (860) 645-0823
Client Services (860) 645-8726

Contact Options:
[ ] Fax:
[ ] Phone:
[X] Email: MMCCormack@cescenter.com

Customer: CES
Address: 39 W 37th Street
NY, NY 10018

Project: 526 Union Avenue
Report to: aarrigo@cescenter.com
Invoice to: "

Project P.O:

This section MUST be completed with Bottle Quantities.

Sampler's Signature: [signature] Date: 11/18/15

Client Sample - Information - Identification

Matrix Code:
DW=Drinking Water **GW**=Ground Water **SW**=Surface Water **WW**=Waste Water
RW=Raw Water **SE**=Sediment **SL**=Sludge **S**=Soil **SD**=Solid **W**=Wipe
OIL=Oil **B**=Bulk **L**=Liquid

Analysis Request: VOCs EPA 8260; SVOCs EPA 8270; PCBs 8081; Pesticides 8082; TAL Metals 6010

PHOENIX USE ONLY SAMPLE #	Customer Sample Identification	Sample Matrix	Date Sampled	Time Sampled	VOCs EPA 8260	SVOCs EPA 8270	PCBs 8081	Pesticides 8082	TAL Metals 6010	Soil VOA Vials [ ] methanol [ ] H2O 3	GL Soil container (8) oz	GL Soil container (4) oz 1	40 ml VOA Vial [ ] As is [ ] HCl	GL Amber 1000ml [ ] As is [ ] H2SO4	PL As is [ ] 250ml [ ] 500ml [ ] 1000ml	PL H2SO4 [ ] 250ml [ ] 500ml	PL HNO3 250ml	PL NaOH 250ml	Bacteria Bottle
26206	SB6-0-2	S	11/18	15:13	—	—	—				—	—							
26207	SB6-2-4	S	11/18	15:25	—	—	—				—	—							
26208	SB6-6-8-SM	S	11/18	15:54	—	—	—				—	—							

Relinquished by:	Accepted by:	Date:	Time:
M. McCormack	Brad Cap	11-19-15	12:08
Brad Cap			

Comments, Special Requirements or Regulations:

Turnaround:
[ ] 1 Day*
[ ] 2 Days*
[ ] 3 Days*
[ ] 5 Days
[ ] 10 Days
[ ] Other
*SURCHARGE APPLIES

NJ
[ ] Res. Criteria
[ ] Non-Res. Criteria
[ ] Impact to GW Soil Cleanup Criteria
[ ] GW Criteria

NY
[ ] TAGM 4046 GW
[ ] TAGM 4046 SOIL
[X] NY375 Unrestricted Use Soil
[X] NY375 Residential Soil
[X] Restricted/Residential
[X] Commercial
[X] Industrial

Data Format
[X] Phoenix Std Report
[X] Excel
[X] PDF
[ ] GIS/Key
[X] EQuIS
[ ] NJ Hazsite EDD
[ ] NY EZ EDD (ASP)
[ ] Other

Data Package
[ ] NJ Reduced Deliv. *
[ ] NY Enhanced (ASP B) *
[ ] Other

State where samples were collected: NY

PHOENIX
Environmental Laboratories, Inc.

Wednesday, November 25, 2015

Attn:
Creative Environmental Solutions
39 West 37th Street, 14th Floor
New York, NY 10018

Project ID: 526 UNION AVENUE
Sample ID#s: BK26209 - BK26211

This laboratory is in compliance with the NELAC requirements of procedures used except where indicated.

This report contains results for the parameters tested, under the sampling conditions described on the Chain Of Custody, as received by the laboratory.

A scanned version of the COC form accompanies the analytical report and is an exact duplicate of the original.

If you have any questions concerning this testing, please do not hesitate to contact Phoenix Client Services at ext. 200.

Sincerely yours,

Phyllis Shiller
Laboratory Director

NELAC - #NY11301
CT Lab Registration #PH-0618
MA Lab Registration #MA-CT-007
ME Lab Registration #CT-007
NH Lab Registration #213693-A,B
NJ Lab Registration #CT-003
NY Lab Registration #11301
PA Lab Registration #68-03530
RI Lab Registration #63
VT Lab Registration #VT11301

587 East Middle Turnpike, P.O. Box 370, Manchester, CT 06040
Telephone (860) 645-1102 Fax (860) 645-0823

PHOENIX

Environmental Laboratories, Inc.
587 East Middle Turnpike, P.O.Box 370, Manchester, CT 06045
Tel. (860) 645-1102 Fax (860) 645-0823

ACCREDITED IN ACCORDANCE WITH nelac NY # 11301

SDG Comments

November 25, 2015

SDG I.D.: GBK26209

8260 Volatile Organics:
1,2-Dibromoethane, 1,2,3 Trichloropropane, and 1,2-Dibromo-3-chloropropane do not meet NY TOGS GA criteria, these compounds are analyzed by GC/ECD method 504 or 8011 to achieve this criteria.

SIM Analysis:
The lowest possible reporting limit under SIM conditions is 0.02 ug/L. The NY TOGS GA criteria for some PAHs is 0.002 ug/L. This level can not be achieved.

8081 Pesticides:
Toxaphene is reported to the lowest possible reporting level. The NY TOGS criteria for this compound can not be achieved.

PHOENIX

Environmental Laboratories, Inc.
587 East Middle Turnpike, P.O.Box 370, Manchester, CT 06045
Tel. (860) 645-1102 Fax (860) 645-0823

ACCREDITED IN ACCORDANCE WITH nelac NY # 11301

Analysis Report

November 25, 2015

FOR: Attn:
Creative Environmental Solutions
39 West 37th Street, 14th Floor
New York, NY 10018

Sample Information		Custody Information		Date	Time
Matrix:	GROUND WATER	Collected by:		11/18/15	12:35
Location Code:	CREATENV	Received by:	SW	11/19/15	17:04
Rush Request:	72 Hour	Analyzed by:	see "By" below		
P.O.#:					

Laboratory Data

SDG ID: GBK26209
Phoenix ID: BK26209

Project ID: 526 UNION AVENUE
Client ID: MW SB 1

Parameter	Result	RL/ PQL	LOD/ MDL	Units	Dilution	Date/Time	By	Reference
Silver	< 0.001	0.001		mg/L	1	11/20/15 13:27	LK	SW6010C
Aluminum	27.2	0.010		mg/L	1	11/20/15 13:27	LK	SW6010C
Arsenic	< 0.004	0.004		mg/L	1	11/20/15 13:27	LK	SW6010C
Barium	0.310	0.002		mg/L	1	11/20/15 13:27	LK	SW6010C
Beryllium	< 0.001	0.001		mg/L	1	11/20/15 13:27	LK	SW6010C
Calcium	89.1	0.010		mg/L	1	11/20/15 13:27	LK	SW6010C
Cadmium	< 0.001	0.001		mg/L	1	11/20/15 13:27	LK	SW6010C
Cobalt	0.018	0.002		mg/L	1	11/20/15 13:27	LK	SW6010C
Chromium	0.045	0.001		mg/L	1	11/20/15 13:27	LK	SW6010C
Copper	0.065	0.005		mg/L	1	11/20/15 13:27	LK	SW6010C
Silver (Dissolved)	< 0.001	0.001		mg/L	1	11/20/15 10:02	LK	SW6010C
Aluminum (Dissolved)	0.132	0.021		mg/L	2	11/20/15 23:01	EK	SW6010C
Arsenic (Dissolved)	< 0.004	0.004		mg/L	1	11/20/15 10:02	LK	SW6010C
Barium (Dissolved)	0.097	0.002		mg/L	1	11/20/15 10:02	LK	SW6010C
Beryllium (Dissolved)	< 0.001	0.001		mg/L	1	11/20/15 10:02	LK	SW6010C
Calcium (Dissolved)	110	0.01		mg/L	1	11/20/15 10:02	LK	SW6010C
Cadmium (Dissolved)	< 0.001	0.001		mg/L	1	11/20/15 10:02	LK	SW6010C
Cobalt (Dissolved)	< 0.001	0.001		mg/L	1	11/20/15 10:02	LK	SW6010C
Chromium (Dissolved)	< 0.001	0.001		mg/L	1	11/20/15 10:02	LK	SW6010C
Copper (Dissolved)	< 0.005	0.005		mg/L	1	11/20/15 10:02	LK	SW6010C
Iron (Dissolved)	0.263	0.011		mg/L	1	11/20/15 10:02	LK	SW6010C
Mercury (Dissolved)	< 0.0002	0.0002		mg/L	1	11/23/15 11:47	RS	SW7470A
Potassium (Dissolved)	18.3	0.1		mg/L	1	11/20/15 10:02	LK	SW6010C
Magnesium (Dissolved)	15.5	0.01		mg/L	1	11/20/15 10:02	LK	SW6010C
Manganese (Dissolved)	2.01	0.001		mg/L	1	11/20/15 10:02	LK	SW6010C
Sodium (Dissolved)	22.8	0.11		mg/L	1	11/20/15 10:02	LK	SW6010C
Nickel (Dissolved)	< 0.001	0.001		mg/L	1	11/20/15 10:02	LK	SW6010C
Lead (Dissolved)	< 0.002	0.002		mg/L	1	11/20/15 10:02	LK	SW6010C

Project ID: 526 UNION AVENUE
Client ID: MW SB 1

Phoenix I.D.: BK26209

Parameter	Result	RL/ PQL	LOD/ MDL	Units	Dilution	Date/Time	By	Reference	
Antimony (Dissolved)	< 0.003	0.003		mg/L	1	11/20/15 10:02	LK	SW6010C	
Selenium (Dissolved)	< 0.002	0.002		mg/L	1	11/20/15 17:14	RS	E200.9/SM3113B-10	
Thallium (Dissolved)	< 0.0005	0.0005		mg/L	1	11/23/15 15:06	RS	SW7010	
Vanadium (Dissolved)	< 0.002	0.002		mg/L	1	11/20/15 10:02	LK	SW6010C	
Zinc (Dissolved)	0.002	0.002		mg/L	1	11/20/15 10:02	LK	SW6010C	
Iron	36.9	0.010		mg/L	1	11/20/15 13:27	LK	SW6010C	
Mercury	< 0.0002	0.0002		mg/L	1	11/20/15 11:43	RS	SW7470A	
Potassium	16.4	0.1		mg/L	1	11/20/15 13:27	LK	SW6010C	
Magnesium	12.2	0.01		mg/L	1	11/20/15 13:27	LK	SW6010C	
Manganese	1.15	0.001		mg/L	1	11/20/15 13:27	LK	SW6010C	
Sodium	25.6	0.1		mg/L	1	11/20/15 13:27	LK	SW6010C	
Nickel	0.035	0.001		mg/L	1	11/20/15 13:27	LK	SW6010C	B
Lead	0.187	0.002		mg/L	1	11/20/15 13:27	LK	SW6010C	
Antimony	< 0.003	0.003		mg/L	1	11/20/15 13:27	LK	SW6010C	
Selenium	< 0.010	0.010		mg/L	1	11/20/15 13:27	LK	SW6010C	
Thallium	< 0.0005	0.0005		mg/L	1	11/23/15 15:37	RS	SM3113B/SW7010-1	
Vanadium	0.061	0.002		mg/L	1	11/20/15 13:27	LK	SW6010C	
Zinc	0.149	0.002		mg/L	1	11/20/15 13:27	LK	SW6010C	
Filtration	Completed					11/19/15 00:00	AG	0.45um Filter	
Dissolved Mercury Digestion	Completed					11/23/15 00:00	W/W	SW7470A	
Mercury Digestion	Completed					11/20/15 00:00	W/W	SW7470A	
PCB Extraction (2 Liter)	Completed					11/23/15 00:00	L	SW3510C	
Extraction for Pest (2 Liter)	Completed					11/19/15 00:00	L	SW3510C	
Semi-Volatile Extraction	Completed					11/21/15 00:00	E/K/D	SW3520C	
Dissolved Metals Preparation	Completed					11/19/15 00:00	AG		
Total Metals Digestion	Completed					11/19/15 00:00	AG	SW3050B	

Polychlorinated Biphenyls

PCB-1016	ND	0.050	0.050	ug/L	1	11/21/15 00:17	AW	E608/SW8082A	
PCB-1221	ND	0.050	0.050	ug/L	1	11/21/15 00:17	AW	E608/SW8082A	
PCB-1232	ND	0.050	0.050	ug/L	1	11/21/15 00:17	AW	E608/SW8082A	
PCB-1242	ND	0.050	0.050	ug/L	1	11/21/15 00:17	AW	E608/SW8082A	
PCB-1248	ND	0.050	0.050	ug/L	1	11/21/15 00:17	AW	E608/SW8082A	
PCB-1254	ND	0.050	0.050	ug/L	1	11/21/15 00:17	AW	E608/SW8082A	
PCB-1260	ND	0.050	0.050	ug/L	1	11/21/15 00:17	AW	E608/SW8082A	
PCB-1262	ND	0.050	0.050	ug/L	1	11/21/15 00:17	AW	E608/SW8082A	
PCB-1268	ND	0.050	0.050	ug/L	1	11/21/15 00:17	AW	E608/SW8082A	
QA/QC Surrogates									
% DCBP	39			%	1	11/21/15 00:17	AW	30 - 150 %	
% TCMX	53			%	1	11/21/15 00:17	AW	30 - 150 %	

Pesticides

4,4' -DDD	ND	0.028		ug/L	5	11/24/15 13:28	CE	SW8081B	
4,4' -DDE	ND	0.028		ug/L	5	11/24/15 13:28	CE	SW8081B	
4,4' -DDT	ND	0.028		ug/L	5	11/24/15 13:28	CE	SW8081B	
a-BHC	ND	0.014		ug/L	5	11/24/15 13:28	CE	SW8081B	
Alachlor	ND	0.43		ug/L	5	11/24/15 13:28	CE	SW8081B	1
Aldrin	ND	0.009		ug/L	5	11/24/15 13:28	CE	SW8081B	
b-BHC	ND	0.028		ug/L	5	11/24/15 13:28	CE	SW8081B	
Chlordane	ND	0.28		ug/L	5	11/24/15 13:28	CE	SW8081B	

Parameter	Result	RL/ PQL	LOD/ MDL	Units	Dilution	Date/Time	By	Reference	
d-BHC	ND	0.028		ug/L	5	11/24/15 13:28	CE	SW8081B	
Dieldrin	ND	0.009		ug/L	5	11/24/15 13:28	CE	SW8081B	
Endosulfan I	ND	0.028		ug/L	5	11/24/15 13:28	CE	SW8081B	
Endosulfan II	ND	0.028		ug/L	5	11/24/15 13:28	CE	SW8081B	
Endosulfan Sulfate	ND	0.028		ug/L	5	11/24/15 13:28	CE	SW8081B	
Endrin	ND	0.028		ug/L	5	11/24/15 13:28	CE	SW8081B	
Endrin Aldehyde	ND	0.28		ug/L	5	11/24/15 13:28	CE	SW8081B	
Endrin ketone	ND	0.28		ug/L	5	11/24/15 13:28	CE	SW8081B	
g-BHC (Lindane)	ND	0.030		ug/L	5	11/24/15 13:28	CE	SW8081B	
Heptachlor	ND	0.028		ug/L	5	11/24/15 13:28	CE	SW8081B	
Heptachlor epoxide	ND	0.028		ug/L	5	11/24/15 13:28	CE	SW8081B	
Methoxychlor	ND	0.57		ug/L	5	11/24/15 13:28	CE	SW8081B	
Toxaphene	ND	1.1		ug/L	5	11/24/15 13:28	CE	SW8081B	
QA/QC Surrogates									
%DCBP (Surrogate Rec)	117			%	5	11/24/15 13:28	CE	30 - 150 %	
%TCMX (Surrogate Rec)	71			%	5	11/24/15 13:28	CE	30 - 150 %	

Volatiles

1,1,1,2-Tetrachloroethane	ND	2.0		ug/L	2	11/20/15 12:03	MH	SW8260C	
1,1,1-Trichloroethane	ND	2.0		ug/L	2	11/20/15 12:03	MH	SW8260C	
1,1,2,2-Tetrachloroethane	ND	1.0		ug/L	2	11/20/15 12:03	MH	SW8260C	
1,1,2-Trichloroethane	ND	2.0		ug/L	2	11/20/15 12:03	MH	SW8260C	
1,1-Dichloroethane	ND	2.0		ug/L	2	11/20/15 12:03	MH	SW8260C	
1,1-Dichloroethene	ND	2.0		ug/L	2	11/20/15 12:03	MH	SW8260C	
1,1-Dichloropropene	ND	2.0		ug/L	2	11/20/15 12:03	MH	SW8260C	
1,2,3-Trichlorobenzene	ND	2.0		ug/L	2	11/20/15 12:03	MH	SW8260C	
1,2,3-Trichloropropane	ND	2.0		ug/L	2	11/20/15 12:03	MH	SW8260C	
1,2,4-Trichlorobenzene	ND	2.0		ug/L	2	11/20/15 12:03	MH	SW8260C	
1,2,4-Trimethylbenzene	ND	2.0		ug/L	2	11/20/15 12:03	MH	SW8260C	
1,2-Dibromo-3-chloropropane	ND	2.0		ug/L	2	11/20/15 12:03	MH	SW8260C	
1,2-Dibromoethane	ND	2.0		ug/L	2	11/20/15 12:03	MH	SW8260C	
1,2-Dichlorobenzene	ND	2.0		ug/L	2	11/20/15 12:03	MH	SW8260C	
1,2-Dichloroethane	ND	1.2		ug/L	2	11/20/15 12:03	MH	SW8260C	
1,2-Dichloropropane	ND	2.0		ug/L	2	11/20/15 12:03	MH	SW8260C	
1,3,5-Trimethylbenzene	ND	2.0		ug/L	2	11/20/15 12:03	MH	SW8260C	
1,3-Dichlorobenzene	ND	2.0		ug/L	2	11/20/15 12:03	MH	SW8260C	
1,3-Dichloropropane	ND	2.0		ug/L	2	11/20/15 12:03	MH	SW8260C	
1,4-Dichlorobenzene	ND	2.0		ug/L	2	11/20/15 12:03	MH	SW8260C	
2,2-Dichloropropane	ND	2.0		ug/L	2	11/20/15 12:03	MH	SW8260C	
2-Chlorotoluene	ND	2.0		ug/L	2	11/20/15 12:03	MH	SW8260C	
2-Hexanone	ND	10		ug/L	2	11/20/15 12:03	MH	SW8260C	
2-Isopropyltoluene	ND	2.0		ug/L	2	11/20/15 12:03	MH	SW8260C	1
4-Chlorotoluene	ND	2.0		ug/L	2	11/20/15 12:03	MH	SW8260C	
4-Methyl-2-pentanone	ND	10		ug/L	2	11/20/15 12:03	MH	SW8260C	
Acetone	ND	50		ug/L	2	11/20/15 12:03	MH	SW8260C	
Acrylonitrile	ND	10		ug/L	2	11/20/15 12:03	MH	SW8260C	
Benzene	ND	1.4		ug/L	2	11/20/15 12:03	MH	SW8260C	
Bromobenzene	ND	2.0		ug/L	2	11/20/15 12:03	MH	SW8260C	
Bromochloromethane	ND	2.0		ug/L	2	11/20/15 12:03	MH	SW8260C	
Bromodichloromethane	ND	1.0		ug/L	2	11/20/15 12:03	MH	SW8260C	

Parameter	Result	RL/ PQL	LOD/ MDL	Units	Dilution	Date/Time	By	Reference	
Bromoform	ND	2.0		ug/L	2	11/20/15 12:03	MH	SW8260C	
Bromomethane	ND	2.0		ug/L	2	11/20/15 12:03	MH	SW8260C	
Carbon Disulfide	ND	10		ug/L	2	11/20/15 12:03	MH	SW8260C	
Carbon tetrachloride	ND	2.0		ug/L	2	11/20/15 12:03	MH	SW8260C	
Chlorobenzene	ND	2.0		ug/L	2	11/20/15 12:03	MH	SW8260C	
Chloroethane	ND	2.0		ug/L	2	11/20/15 12:03	MH	SW8260C	
Chloroform	ND	2.0		ug/L	2	11/20/15 12:03	MH	SW8260C	
Chloromethane	ND	2.0		ug/L	2	11/20/15 12:03	MH	SW8260C	
cis-1,2-Dichloroethene	ND	2.0		ug/L	2	11/20/15 12:03	MH	SW8260C	
cis-1,3-Dichloropropene	ND	0.80		ug/L	2	11/20/15 12:03	MH	SW8260C	
Dibromochloromethane	ND	1.0		ug/L	2	11/20/15 12:03	MH	SW8260C	
Dibromomethane	ND	2.0		ug/L	2	11/20/15 12:03	MH	SW8260C	
Dichlorodifluoromethane	ND	2.0		ug/L	2	11/20/15 12:03	MH	SW8260C	
Ethylbenzene	ND	2.0		ug/L	2	11/20/15 12:03	MH	SW8260C	
Hexachlorobutadiene	ND	0.80		ug/L	2	11/20/15 12:03	MH	SW8260C	
Isopropylbenzene	ND	2.0		ug/L	2	11/20/15 12:03	MH	SW8260C	
m&p-Xylene	ND	2.0		ug/L	2	11/20/15 12:03	MH	SW8260C	
Methyl ethyl ketone	ND	10		ug/L	2	11/20/15 12:03	MH	SW8260C	
Methyl t-butyl ether (MTBE)	ND	2.0		ug/L	2	11/20/15 12:03	MH	SW8260C	
Methylene chloride	ND	2.0		ug/L	2	11/20/15 12:03	MH	SW8260C	
Naphthalene	ND	2.0		ug/L	2	11/20/15 12:03	MH	SW8260C	
n-Butylbenzene	ND	2.0		ug/L	2	11/20/15 12:03	MH	SW8260C	
n-Propylbenzene	ND	2.0		ug/L	2	11/20/15 12:03	MH	SW8260C	
o-Xylene	ND	2.0		ug/L	2	11/20/15 12:03	MH	SW8260C	
p-Isopropyltoluene	ND	2.0		ug/L	2	11/20/15 12:03	MH	SW8260C	
sec-Butylbenzene	ND	2.0		ug/L	2	11/20/15 12:03	MH	SW8260C	
Styrene	ND	2.0		ug/L	2	11/20/15 12:03	MH	SW8260C	
tert-Butylbenzene	ND	2.0		ug/L	2	11/20/15 12:03	MH	SW8260C	
Tetrachloroethene	ND	2.0		ug/L	2	11/20/15 12:03	MH	SW8260C	
Tetrahydrofuran (THF)	ND	5.0		ug/L	2	11/20/15 12:03	MH	SW8260C	1
Toluene	ND	2.0		ug/L	2	11/20/15 12:03	MH	SW8260C	
Total Xylenes	ND	2.0		ug/L	2	11/20/15 12:03	MH	SW8260C	
trans-1,2-Dichloroethene	ND	2.0		ug/L	2	11/20/15 12:03	MH	SW8260C	
trans-1,3-Dichloropropene	ND	0.80		ug/L	2	11/20/15 12:03	MH	SW8260C	
trans-1,4-dichloro-2-butene	ND	10		ug/L	2	11/20/15 12:03	MH	SW8260C	
Trichloroethene	ND	2.0		ug/L	2	11/20/15 12:03	MH	SW8260C	
Trichlorofluoromethane	ND	2.0		ug/L	2	11/20/15 12:03	MH	SW8260C	
Trichlorotrifluoroethane	ND	2.0		ug/L	2	11/20/15 12:03	MH	SW8260C	
Vinyl chloride	ND	2.0		ug/L	2	11/20/15 12:03	MH	SW8260C	
QA/QC Surrogates									
% 1,2-dichlorobenzene-d4	100			%	2	11/20/15 12:03	MH	70 - 130 %	
% Bromofluorobenzene	91			%	2	11/20/15 12:03	MH	70 - 130 %	
% Dibromofluoromethane	100			%	2	11/20/15 12:03	MH	70 - 130 %	
% Toluene-d8	102			%	2	11/20/15 12:03	MH	70 - 130 %	

Semivolatiles

1,2,4-Trichlorobenzene	ND	5.8		ug/L	1	11/23/15 18:17	KCA	SW8270D	
1,2-Dichlorobenzene	ND	2.9		ug/L	1	11/23/15 18:17	KCA	SW8270D	
1,2-Diphenylhydrazine	ND	5.8		ug/L	1	11/23/15 18:17	KCA	SW8270D	
1,3-Dichlorobenzene	ND	2.9		ug/L	1	11/23/15 18:17	KCA	SW8270D	

Project ID: 526 UNION AVENUE
Client ID: MW SB 1

Phoenix I.D.: BK26209

Parameter	Result	RL/ PQL	LOD/ MDL	Units	Dilution	Date/Time	By	Reference
1,4-Dichlorobenzene	ND	2.9		ug/L	1	11/23/15 18:17	KCA	SW8270D
2,4,5-Trichlorophenol	ND	1.0		ug/L	1	11/23/15 18:17	KCA	SW8270D
2,4,6-Trichlorophenol	ND	1.0		ug/L	1	11/23/15 18:17	KCA	SW8270D
2,4-Dichlorophenol	ND	1.0		ug/L	1	11/23/15 18:17	KCA	SW8270D
2,4-Dimethylphenol	ND	1.0		ug/L	1	11/23/15 18:17	KCA	SW8270D
2,4-Dinitrophenol	ND	1.0		ug/L	1	11/23/15 18:17	KCA	SW8270D
2,4-Dinitrotoluene	ND	5		ug/L	1	11/23/15 18:17	KCA	SW8270D
2,6-Dinitrotoluene	ND	5		ug/L	1	11/23/15 18:17	KCA	SW8270D
2-Chloronaphthalene	ND	5.8		ug/L	1	11/23/15 18:17	KCA	SW8270D
2-Chlorophenol	ND	1.0		ug/L	1	11/23/15 18:17	KCA	SW8270D
2-Methylphenol (o-cresol)	ND	1.0		ug/L	1	11/23/15 18:17	KCA	SW8270D
2-Nitroaniline	ND	5.0		ug/L	1	11/23/15 18:17	KCA	SW8270D
2-Nitrophenol	ND	1.0		ug/L	1	11/23/15 18:17	KCA	SW8270D
3&4-Methylphenol (m&p-cresol)	ND	12		ug/L	1	11/23/15 18:17	KCA	SW8270D
3,3'-Dichlorobenzidine	ND	5.0		ug/L	1	11/23/15 18:17	KCA	SW8270D
3-Nitroaniline	ND	5		ug/L	1	11/23/15 18:17	KCA	SW8270D
4,6-Dinitro-2-methylphenol	ND	1.0		ug/L	1	11/23/15 18:17	KCA	SW8270D
4-Bromophenyl phenyl ether	ND	5.8		ug/L	1	11/23/15 18:17	KCA	SW8270D
4-Chloro-3-methylphenol	ND	1.0		ug/L	1	11/23/15 18:17	KCA	SW8270D
4-Chloroaniline	ND	5.0		ug/L	1	11/23/15 18:17	KCA	SW8270D
4-Chlorophenyl phenyl ether	ND	1.2		ug/L	1	11/23/15 18:17	KCA	SW8270D
4-Nitroaniline	ND	5		ug/L	1	11/23/15 18:17	KCA	SW8270D
4-Nitrophenol	ND	1.0		ug/L	1	11/23/15 18:17	KCA	SW8270D
Acetophenone	ND	5.8		ug/L	1	11/23/15 18:17	KCA	SW8270D
Aniline	ND	5.0		ug/L	1	11/23/15 18:17	KCA	SW8270D
Benzidine	ND	5.0		ug/L	1	11/23/15 18:17	KCA	SW8270D
Benzoic acid	ND	50		ug/L	1	11/23/15 18:17	KCA	SW8270D
Benzyl butyl phthalate	ND	5.8		ug/L	1	11/23/15 18:17	KCA	SW8270D
Bis(2-chloroethoxy)methane	ND	5.0		ug/L	1	11/23/15 18:17	KCA	SW8270D
Bis(2-chloroethyl)ether	ND	1.0		ug/L	1	11/23/15 18:17	KCA	SW8270D
Bis(2-chloroisopropyl)ether	ND	5.8		ug/L	1	11/23/15 18:17	KCA	SW8270D
Carbazole	ND	5.8		ug/L	1	11/23/15 18:17	KCA	SW8270D
Dibenzofuran	ND	5		ug/L	1	11/23/15 18:17	KCA	SW8270D
Diethyl phthalate	ND	5.8		ug/L	1	11/23/15 18:17	KCA	SW8270D
Dimethylphthalate	ND	5.8		ug/L	1	11/23/15 18:17	KCA	SW8270D
Di-n-butylphthalate	ND	5.8		ug/L	1	11/23/15 18:17	KCA	SW8270D
Di-n-octylphthalate	ND	5.8		ug/L	1	11/23/15 18:17	KCA	SW8270D
Hexachlorocyclopentadiene	ND	5		ug/L	1	11/23/15 18:17	KCA	SW8270D
Isophorone	ND	5.8		ug/L	1	11/23/15 18:17	KCA	SW8270D
N-Nitrosodimethylamine	ND	5.8		ug/L	1	11/23/15 18:17	KCA	SW8270D
N-Nitrosodi-n-propylamine	ND	5.8		ug/L	1	11/23/15 18:17	KCA	SW8270D
N-Nitrosodiphenylamine	ND	5.8		ug/L	1	11/23/15 18:17	KCA	SW8270D
Phenol	ND	1.0		ug/L	1	11/23/15 18:17	KCA	SW8270D
QA/QC Surrogates								
% 2,4,6-Tribromophenol	97			%	1	11/23/15 18:17	KCA	15 - 110 %
% 2-Fluorobiphenyl	65			%	1	11/23/15 18:17	KCA	30 - 130 %
% 2-Fluorophenol	50			%	1	11/23/15 18:17	KCA	15 - 110 %
% Nitrobenzene-d5	61			%	1	11/23/15 18:17	KCA	30 - 130 %
% Phenol-d5	63			%	1	11/23/15 18:17	KCA	15 - 110 %

Project ID: 526 UNION AVENUE
Client ID: MW SB 1

Phoenix I.D.: BK26209

Parameter	Result	RL/ PQL	LOD/ MDL	Units	Dilution	Date/Time	By	Reference	
% Terphenyl-d14	83			%	1	11/23/15 18:17	KCA	30 - 130 %	
Semivolatiles (SIM)									
1,2,4,5-Tetrachlorobenzene	ND	0.58		ug/L	1	11/23/15 18:33	DD	SW8270D (SIM)	
2-Methylnaphthalene	ND	1.2		ug/L	1	11/23/15 18:33	DD	SW8270D (SIM)	
Acenaphthene	0.80	0.06		ug/L	1	11/23/15 18:33	DD	SW8270D (SIM)	
Acenaphthylene	0.13	0.06		ug/L	1	11/23/15 18:33	DD	SW8270D (SIM)	
Anthracene	0.36	0.02		ug/L	1	11/23/15 18:33	DD	SW8270D (SIM)	
Benz(a)anthracene	0.40	0.02		ug/L	1	11/23/15 18:33	DD	SW8270D (SIM)	
Benzo(a)pyrene	0.35	0.02		ug/L	1	11/23/15 18:33	DD	SW8270D (SIM)	
Benzo(b)fluoranthene	0.32	0.02		ug/L	1	11/23/15 18:33	DD	SW8270D (SIM)	
Benzo(ghi)perylene	ND	0.58		ug/L	1	11/23/15 18:33	DD	SW8270D (SIM)	
Benzo(k)fluoranthene	0.27	0.02		ug/L	1	11/23/15 18:33	DD	SW8270D (SIM)	
Bis(2-ethylhexyl)phthalate	ND	0.58		ug/L	1	11/23/15 18:33	DD	SW8270D (SIM)	B
Chrysene	0.38	0.02		ug/L	1	11/23/15 18:33	DD	SW8270D (SIM)	
Dibenz(a,h)anthracene	0.06	0.02		ug/L	1	11/23/15 18:33	DD	SW8270D (SIM)	
Fluoranthene	1.2	0.05		ug/L	1	11/23/15 18:33	DD	SW8270D (SIM)	
Fluorene	0.73	0.12		ug/L	1	11/23/15 18:33	DD	SW8270D (SIM)	
Hexachlorobenzene	ND	0.04		ug/L	1	11/23/15 18:33	DD	SW8270D (SIM)	
Hexachlorobutadiene	ND	0.5		ug/L	1	11/23/15 18:33	DD	SW8270D (SIM)	
Hexachloroethane	ND	0.58		ug/L	1	11/23/15 18:33	DD	SW8270D (SIM)	
Indeno(1,2,3-cd)pyrene	0.16	0.02		ug/L	1	11/23/15 18:33	DD	SW8270D (SIM)	
Naphthalene	1.1	0.12		ug/L	1	11/23/15 18:33	DD	SW8270D (SIM)	
Nitrobenzene	ND	0.12		ug/L	1	11/23/15 18:33	DD	SW8270D (SIM)	
Pentachloronitrobenzene	ND	0.12		ug/L	1	11/23/15 18:33	DD	SW8270D (SIM)	
Pentachlorophenol	ND	0.93		ug/L	1	11/23/15 18:33	DD	SW8270D (SIM)	
Phenanthrene	1.6	0.06		ug/L	1	11/23/15 18:33	DD	SW8270D (SIM)	
Pyrene	0.97	0.02		ug/L	1	11/23/15 18:33	DD	SW8270D (SIM)	
Pyridine	ND	0.58		ug/L	1	11/23/15 18:33	DD	SW8270D (SIM)	
QA/QC Surrogates									
% 2,4,6-Tribromophenol	97			%	1	11/23/15 18:33	DD	15 - 110 %	
% 2-Fluorobiphenyl	65			%	1	11/23/15 18:33	DD	30 - 130 %	
% 2-Fluorophenol	50			%	1	11/23/15 18:33	DD	15 - 110 %	
% Nitrobenzene-d5	61			%	1	11/23/15 18:33	DD	30 - 130 %	
% Phenol-d5	63			%	1	11/23/15 18:33	DD	15 - 110 %	
% Terphenyl-d14	83			%	1	11/23/15 18:33	DD	30 - 130 %	

Parameter	Result	RL/ PQL	LOD/ MDL	Units	Dilution	Date/Time	By	Reference

1 = This parameter is not certified by NY NELAC for this matrix. NY NELAC does not offer certification for all parameters at this time.
B = Present in blank, no bias suspected.

RL/PQL=Reporting/Practical Quantitation Level (Equivalent to NELAC LOQ, Limit of Quanitation) ND=Not Detected BRL=Below Reporting Level LOD=Limit of Detection MDL=Method Detection Limit
QA/QC Surrogates: Surrogates are compounds (preceeded with a %) added by the lab to determine analysis efficiency. Surrogate results(%) listed in the report are not "detected" compounds.

Comments:

Per 1.4.6 of EPA method 8270D, 1,2-Diphenylhydrazine is unstable and readily converts to Azobenzene. Azobenzene is used for the calibration of 1,2-Diphenylhydrazine.

Volatile Comment:
Elevated reporting limits due to the foamy nature of the sample.

Pesticide Comment:
Due to a matrix interference and/or the presence of a large amount of non-target material in the sample, an elevated RL was reported.

If there are any questions regarding this data, please call Phoenix Client Services at extension 200.
This report must not be reproduced except in full as defined by the attached chain of custody.

Phyllis Shiller, Laboratory Director
November 25, 2015
Reviewed and Released by: Bobbi Aloisa, Vice President

PHOENIX

Environmental Laboratories, Inc.
587 East Middle Turnpike, P.O.Box 370, Manchester, CT 06045
Tel. (860) 645-1102 Fax (860) 645-0823

ACCREDITED IN ACCORDANCE WITH nelac NY # 11301

Analysis Report

November 25, 2015

FOR: Attn:
Creative Environmental Solutions
39 West 37th Street, 14th Floor
New York, NY 10018

Sample Information		Custody Information		Date	Time
Matrix:	GROUND WATER	Collected by:		11/18/15	12:35
Location Code:	CREATENV	Received by:	SW	11/19/15	17:04
Rush Request:	72 Hour	Analyzed by:	see "By" below		
P.O.#:					

Laboratory Data

SDG ID: GBK26209
Phoenix ID: BK26210

Project ID: 526 UNION AVENUE
Client ID: MW SB 2

Parameter	Result	RL/ PQL	LOD/ MDL	Units	Dilution	Date/Time	By	Reference
Silver	< 0.001	0.001		mg/L	1	11/20/15 13:35	LK	SW6010C
Aluminum	1.58	0.010		mg/L	1	11/20/15 13:35	LK	SW6010C
Arsenic	< 0.004	0.004		mg/L	1	11/20/15 13:35	LK	SW6010C
Barium	0.160	0.002		mg/L	1	11/20/15 13:35	LK	SW6010C
Beryllium	< 0.001	0.001		mg/L	1	11/20/15 13:35	LK	SW6010C
Calcium	109	0.010		mg/L	1	11/20/15 13:35	LK	SW6010C
Cadmium	< 0.001	0.001		mg/L	1	11/20/15 13:35	LK	SW6010C
Cobalt	< 0.002	0.002		mg/L	1	11/20/15 13:35	LK	SW6010C
Chromium	0.003	0.001		mg/L	1	11/20/15 13:35	LK	SW6010C
Copper	< 0.005	0.005		mg/L	1	11/20/15 13:35	LK	SW6010C
Silver (Dissolved)	< 0.001	0.001		mg/L	1	11/20/15 10:05	LK	SW6010C
Aluminum (Dissolved)	0.153	0.021		mg/L	2	11/20/15 23:04	EK	SW6010C
Arsenic (Dissolved)	< 0.004	0.004		mg/L	1	11/20/15 10:05	LK	SW6010C
Barium (Dissolved)	0.096	0.002		mg/L	1	11/20/15 10:05	LK	SW6010C
Beryllium (Dissolved)	< 0.001	0.001		mg/L	1	11/20/15 10:05	LK	SW6010C
Calcium (Dissolved)	108	0.01		mg/L	1	11/20/15 10:05	LK	SW6010C
Cadmium (Dissolved)	< 0.001	0.001		mg/L	1	11/20/15 10:05	LK	SW6010C
Cobalt (Dissolved)	< 0.001	0.001		mg/L	1	11/20/15 10:05	LK	SW6010C
Chromium (Dissolved)	< 0.001	0.001		mg/L	1	11/20/15 10:05	LK	SW6010C
Copper (Dissolved)	< 0.005	0.005		mg/L	1	11/20/15 10:05	LK	SW6010C
Iron (Dissolved)	1.28	0.011		mg/L	1	11/20/15 10:05	LK	SW6010C
Mercury (Dissolved)	< 0.0002	0.0002		mg/L	1	11/23/15 11:49	RS	SW7470A
Potassium (Dissolved)	17.9	0.1		mg/L	1	11/20/15 10:05	LK	SW6010C
Magnesium (Dissolved)	15.5	0.01		mg/L	1	11/20/15 10:05	LK	SW6010C
Manganese (Dissolved)	1.98	0.001		mg/L	1	11/20/15 10:05	LK	SW6010C
Sodium (Dissolved)	22.8	0.11		mg/L	1	11/20/15 10:05	LK	SW6010C
Nickel (Dissolved)	< 0.001	0.001		mg/L	1	11/20/15 10:05	LK	SW6010C
Lead (Dissolved)	< 0.002	0.002		mg/L	1	11/20/15 10:05	LK	SW6010C

Project ID: 526 UNION AVENUE
Client ID: MW SB 2

Phoenix I.D.: BK26210

Parameter	Result	RL/ PQL	LOD/ MDL	Units	Dilution	Date/Time	By	Reference	
Antimony (Dissolved)	< 0.003	0.003		mg/L	1	11/20/15 10:05	LK	SW6010C	
Selenium (Dissolved)	< 0.002	0.002		mg/L	1	11/20/15 17:20	RS	E200.9/SM3113B-10	
Thallium (Dissolved)	< 0.0005	0.0005		mg/L	1	11/23/15 15:19	RS	SW7010	
Vanadium (Dissolved)	< 0.002	0.002		mg/L	1	11/20/15 10:05	LK	SW6010C	
Zinc (Dissolved)	0.002	0.002		mg/L	1	11/20/15 10:05	LK	SW6010C	
Iron	9.40	0.010		mg/L	1	11/20/15 13:35	LK	SW6010C	
Mercury	< 0.0002	0.0002		mg/L	1	11/20/15 11:50	RS	SW7470A	
Potassium	19.1	0.1		mg/L	1	11/20/15 13:35	LK	SW6010C	
Magnesium	16.1	0.01		mg/L	1	11/20/15 13:35	LK	SW6010C	
Manganese	2.17	0.010		mg/L	10	11/23/15 21:44	EK	SW6010C	
Sodium	23.8	0.1		mg/L	1	11/20/15 13:35	LK	SW6010C	
Nickel	0.003	0.001		mg/L	1	11/20/15 13:35	LK	SW6010C	B*
Lead	0.011	0.002		mg/L	1	11/20/15 13:35	LK	SW6010C	
Antimony	< 0.003	0.003		mg/L	1	11/20/15 13:35	LK	SW6010C	
Selenium	< 0.010	0.010		mg/L	1	11/20/15 13:35	LK	SW6010C	
Thallium	< 0.0005	0.0005		mg/L	1	11/23/15 15:49	RS	SM3113B/SW7010-1	
Vanadium	0.003	0.002		mg/L	1	11/20/15 13:35	LK	SW6010C	
Zinc	0.009	0.002		mg/L	1	11/20/15 13:35	LK	SW6010C	
Filtration	Completed					11/19/15 00:00	AG	0.45um Filter	
Dissolved Mercury Digestion	Completed					11/23/15 00:00	W/W	SW7470A	
Mercury Digestion	Completed					11/20/15 00:00	W/W	SW7470A	
PCB Extraction (2 Liter)	Completed					11/23/15 00:00	L	SW3510C	
Extraction for Pest (2 Liter)	Completed					11/19/15 00:00	L	SW3510C	
Semi-Volatile Extraction	Completed					11/21/15 00:00	E/K/D	SW3520C	
Dissolved Metals Preparation	Completed					11/19/15 00:00	AG		
Total Metals Digestion	Completed					11/19/15 00:00	AG	SW3050B	

Polychlorinated Biphenyls

PCB-1016	ND	0.053	0.053	ug/L	1	11/21/15 00:41	AW	E608/SW8082A	
PCB-1221	ND	0.053	0.053	ug/L	1	11/21/15 00:41	AW	E608/SW8082A	
PCB-1232	ND	0.053	0.053	ug/L	1	11/21/15 00:41	AW	E608/SW8082A	
PCB-1242	ND	0.053	0.053	ug/L	1	11/21/15 00:41	AW	E608/SW8082A	
PCB-1248	ND	0.053	0.053	ug/L	1	11/21/15 00:41	AW	E608/SW8082A	
PCB-1254	ND	0.053	0.053	ug/L	1	11/21/15 00:41	AW	E608/SW8082A	
PCB-1260	ND	0.053	0.053	ug/L	1	11/21/15 00:41	AW	E608/SW8082A	
PCB-1262	ND	0.053	0.053	ug/L	1	11/21/15 00:41	AW	E608/SW8082A	
PCB-1268	ND	0.053	0.053	ug/L	1	11/21/15 00:41	AW	E608/SW8082A	
QA/QC Surrogates									
% DCBP	38			%	1	11/21/15 00:41	AW	30 - 150 %	
% TCMX	55			%	1	11/21/15 00:41	AW	30 - 150 %	

Pesticides

4,4' -DDD	ND	0.013		ug/L	5	11/24/15 13:47	CE	SW8081B	
4,4' -DDE	ND	0.013		ug/L	5	11/24/15 13:47	CE	SW8081B	
4,4' -DDT	ND	0.013		ug/L	5	11/24/15 13:47	CE	SW8081B	
a-BHC	ND	0.013		ug/L	5	11/24/15 13:47	CE	SW8081B	
Alachlor	ND	0.40		ug/L	5	11/24/15 13:47	CE	SW8081B	1
Aldrin	ND	0.008		ug/L	5	11/24/15 13:47	CE	SW8081B	
b-BHC	ND	0.027		ug/L	5	11/24/15 13:47	CE	SW8081B	
Chlordane	ND	0.27		ug/L	5	11/24/15 13:47	CE	SW8081B	

Parameter	Result	RL/ PQL	LOD/ MDL	Units	Dilution	Date/Time	By	Reference	
d-BHC	ND	0.027		ug/L	5	11/24/15 13:47	CE	SW8081B	
Dieldrin	ND	0.008		ug/L	5	11/24/15 13:47	CE	SW8081B	
Endosulfan I	ND	0.027		ug/L	5	11/24/15 13:47	CE	SW8081B	
Endosulfan II	ND	0.027		ug/L	5	11/24/15 13:47	CE	SW8081B	
Endosulfan Sulfate	ND	0.027		ug/L	5	11/24/15 13:47	CE	SW8081B	
Endrin	ND	0.027		ug/L	5	11/24/15 13:47	CE	SW8081B	
Endrin Aldehyde	ND	0.27		ug/L	5	11/24/15 13:47	CE	SW8081B	
Endrin ketone	ND	0.27		ug/L	5	11/24/15 13:47	CE	SW8081B	
g-BHC (Lindane)	ND	0.027		ug/L	5	11/24/15 13:47	CE	SW8081B	
Heptachlor	ND	0.027		ug/L	5	11/24/15 13:47	CE	SW8081B	
Heptachlor epoxide	ND	0.027		ug/L	5	11/24/15 13:47	CE	SW8081B	
Methoxychlor	ND	0.54		ug/L	5	11/24/15 13:47	CE	SW8081B	
Toxaphene	ND	5.4		ug/L	5	11/24/15 13:47	CE	SW8081B	
QA/QC Surrogates									
%DCBP (Surrogate Rec)	42			%	5	11/24/15 13:47	CE	30 - 150 %	
%TCMX (Surrogate Rec)	71			%	5	11/24/15 13:47	CE	30 - 150 %	

Volatiles

1,1,1,2-Tetrachloroethane	ND	2.0		ug/L	2	11/20/15 12:26	MH	SW8260C	
1,1,1-Trichloroethane	ND	2.0		ug/L	2	11/20/15 12:26	MH	SW8260C	
1,1,2,2-Tetrachloroethane	ND	1.0		ug/L	2	11/20/15 12:26	MH	SW8260C	
1,1,2-Trichloroethane	ND	2.0		ug/L	2	11/20/15 12:26	MH	SW8260C	
1,1-Dichloroethane	ND	2.0		ug/L	2	11/20/15 12:26	MH	SW8260C	
1,1-Dichloroethene	ND	2.0		ug/L	2	11/20/15 12:26	MH	SW8260C	
1,1-Dichloropropene	ND	2.0		ug/L	2	11/20/15 12:26	MH	SW8260C	
1,2,3-Trichlorobenzene	ND	2.0		ug/L	2	11/20/15 12:26	MH	SW8260C	
1,2,3-Trichloropropane	ND	2.0		ug/L	2	11/20/15 12:26	MH	SW8260C	
1,2,4-Trichlorobenzene	ND	2.0		ug/L	2	11/20/15 12:26	MH	SW8260C	
1,2,4-Trimethylbenzene	ND	2.0		ug/L	2	11/20/15 12:26	MH	SW8260C	
1,2-Dibromo-3-chloropropane	ND	2.0		ug/L	2	11/20/15 12:26	MH	SW8260C	
1,2-Dibromoethane	ND	2.0		ug/L	2	11/20/15 12:26	MH	SW8260C	
1,2-Dichlorobenzene	ND	2.0		ug/L	2	11/20/15 12:26	MH	SW8260C	
1,2-Dichloroethane	ND	1.2		ug/L	2	11/20/15 12:26	MH	SW8260C	
1,2-Dichloropropane	ND	2.0		ug/L	2	11/20/15 12:26	MH	SW8260C	
1,3,5-Trimethylbenzene	ND	2.0		ug/L	2	11/20/15 12:26	MH	SW8260C	
1,3-Dichlorobenzene	ND	2.0		ug/L	2	11/20/15 12:26	MH	SW8260C	
1,3-Dichloropropane	ND	2.0		ug/L	2	11/20/15 12:26	MH	SW8260C	
1,4-Dichlorobenzene	ND	2.0		ug/L	2	11/20/15 12:26	MH	SW8260C	
2,2-Dichloropropane	ND	2.0		ug/L	2	11/20/15 12:26	MH	SW8260C	
2-Chlorotoluene	ND	2.0		ug/L	2	11/20/15 12:26	MH	SW8260C	
2-Hexanone	ND	10		ug/L	2	11/20/15 12:26	MH	SW8260C	
2-Isopropyltoluene	ND	2.0		ug/L	2	11/20/15 12:26	MH	SW8260C	1
4-Chlorotoluene	ND	2.0		ug/L	2	11/20/15 12:26	MH	SW8260C	
4-Methyl-2-pentanone	ND	10		ug/L	2	11/20/15 12:26	MH	SW8260C	
Acetone	ND	50		ug/L	2	11/20/15 12:26	MH	SW8260C	
Acrylonitrile	ND	10		ug/L	2	11/20/15 12:26	MH	SW8260C	
Benzene	ND	1.4		ug/L	2	11/20/15 12:26	MH	SW8260C	
Bromobenzene	ND	2.0		ug/L	2	11/20/15 12:26	MH	SW8260C	
Bromochloromethane	ND	2.0		ug/L	2	11/20/15 12:26	MH	SW8260C	
Bromodichloromethane	ND	1.0		ug/L	2	11/20/15 12:26	MH	SW8260C	

Parameter	Result	RL/ PQL	LOD/ MDL	Units	Dilution	Date/Time	By	Reference	
Bromoform	ND	2.0		ug/L	2	11/20/15 12:26	MH	SW8260C	
Bromomethane	ND	2.0		ug/L	2	11/20/15 12:26	MH	SW8260C	
Carbon Disulfide	ND	10		ug/L	2	11/20/15 12:26	MH	SW8260C	
Carbon tetrachloride	ND	2.0		ug/L	2	11/20/15 12:26	MH	SW8260C	
Chlorobenzene	ND	2.0		ug/L	2	11/20/15 12:26	MH	SW8260C	
Chloroethane	ND	2.0		ug/L	2	11/20/15 12:26	MH	SW8260C	
Chloroform	ND	2.0		ug/L	2	11/20/15 12:26	MH	SW8260C	
Chloromethane	ND	2.0		ug/L	2	11/20/15 12:26	MH	SW8260C	
cis-1,2-Dichloroethene	ND	2.0		ug/L	2	11/20/15 12:26	MH	SW8260C	
cis-1,3-Dichloropropene	ND	0.80		ug/L	2	11/20/15 12:26	MH	SW8260C	
Dibromochloromethane	ND	1.0		ug/L	2	11/20/15 12:26	MH	SW8260C	
Dibromomethane	ND	2.0		ug/L	2	11/20/15 12:26	MH	SW8260C	
Dichlorodifluoromethane	ND	2.0		ug/L	2	11/20/15 12:26	MH	SW8260C	
Ethylbenzene	ND	2.0		ug/L	2	11/20/15 12:26	MH	SW8260C	
Hexachlorobutadiene	ND	0.80		ug/L	2	11/20/15 12:26	MH	SW8260C	
Isopropylbenzene	ND	2.0		ug/L	2	11/20/15 12:26	MH	SW8260C	
m&p-Xylene	ND	2.0		ug/L	2	11/20/15 12:26	MH	SW8260C	
Methyl ethyl ketone	ND	10		ug/L	2	11/20/15 12:26	MH	SW8260C	
Methyl t-butyl ether (MTBE)	ND	2.0		ug/L	2	11/20/15 12:26	MH	SW8260C	
Methylene chloride	ND	2.0		ug/L	2	11/20/15 12:26	MH	SW8260C	
Naphthalene	ND	2.0		ug/L	2	11/20/15 12:26	MH	SW8260C	
n-Butylbenzene	ND	2.0		ug/L	2	11/20/15 12:26	MH	SW8260C	
n-Propylbenzene	ND	2.0		ug/L	2	11/20/15 12:26	MH	SW8260C	
o-Xylene	ND	2.0		ug/L	2	11/20/15 12:26	MH	SW8260C	
p-Isopropyltoluene	ND	2.0		ug/L	2	11/20/15 12:26	MH	SW8260C	
sec-Butylbenzene	ND	2.0		ug/L	2	11/20/15 12:26	MH	SW8260C	
Styrene	ND	2.0		ug/L	2	11/20/15 12:26	MH	SW8260C	
tert-Butylbenzene	ND	2.0		ug/L	2	11/20/15 12:26	MH	SW8260C	
Tetrachloroethene	ND	2.0		ug/L	2	11/20/15 12:26	MH	SW8260C	
Tetrahydrofuran (THF)	ND	5.0		ug/L	2	11/20/15 12:26	MH	SW8260C	1
Toluene	ND	2.0		ug/L	2	11/20/15 12:26	MH	SW8260C	
Total Xylenes	ND	2.0		ug/L	2	11/20/15 12:26	MH	SW8260C	
trans-1,2-Dichloroethene	ND	2.0		ug/L	2	11/20/15 12:26	MH	SW8260C	
trans-1,3-Dichloropropene	ND	0.80		ug/L	2	11/20/15 12:26	MH	SW8260C	
trans-1,4-dichloro-2-butene	ND	10		ug/L	2	11/20/15 12:26	MH	SW8260C	
Trichloroethene	ND	2.0		ug/L	2	11/20/15 12:26	MH	SW8260C	
Trichlorofluoromethane	ND	2.0		ug/L	2	11/20/15 12:26	MH	SW8260C	
Trichlorotrifluoroethane	ND	2.0		ug/L	2	11/20/15 12:26	MH	SW8260C	
Vinyl chloride	ND	2.0		ug/L	2	11/20/15 12:26	MH	SW8260C	
QA/QC Surrogates									
% 1,2-dichlorobenzene-d4	99			%	2	11/20/15 12:26	MH	70 - 130 %	
% Bromofluorobenzene	91			%	2	11/20/15 12:26	MH	70 - 130 %	
% Dibromofluoromethane	104			%	2	11/20/15 12:26	MH	70 - 130 %	
% Toluene-d8	101			%	2	11/20/15 12:26	MH	70 - 130 %	

Semivolatiles

1,2,4-Trichlorobenzene	ND	5.6		ug/L	1	11/23/15 18:40	KCA	SW8270D
1,2-Dichlorobenzene	ND	2.8		ug/L	1	11/23/15 18:40	KCA	SW8270D
1,2-Diphenylhydrazine	ND	5.6		ug/L	1	11/23/15 18:40	KCA	SW8270D
1,3-Dichlorobenzene	ND	2.8		ug/L	1	11/23/15 18:40	KCA	SW8270D

Project ID: 526 UNION AVENUE
Client ID: MW SB 2

Phoenix I.D.: BK26210

Parameter	Result	RL/ PQL	LOD/ MDL	Units	Dilution	Date/Time	By	Reference
1,4-Dichlorobenzene	ND	2.8		ug/L	1	11/23/15 18:40	KCA	SW8270D
2,4,5-Trichlorophenol	ND	1.0		ug/L	1	11/23/15 18:40	KCA	SW8270D
2,4,6-Trichlorophenol	ND	1.0		ug/L	1	11/23/15 18:40	KCA	SW8270D
2,4-Dichlorophenol	ND	1.0		ug/L	1	11/23/15 18:40	KCA	SW8270D
2,4-Dimethylphenol	ND	1.0		ug/L	1	11/23/15 18:40	KCA	SW8270D
2,4-Dinitrophenol	ND	1.0		ug/L	1	11/23/15 18:40	KCA	SW8270D
2,4-Dinitrotoluene	ND	5.0		ug/L	1	11/23/15 18:40	KCA	SW8270D
2,6-Dinitrotoluene	ND	5.0		ug/L	1	11/23/15 18:40	KCA	SW8270D
2-Chloronaphthalene	ND	5.6		ug/L	1	11/23/15 18:40	KCA	SW8270D
2-Chlorophenol	ND	1.0		ug/L	1	11/23/15 18:40	KCA	SW8270D
2-Methylphenol (o-cresol)	ND	1.0		ug/L	1	11/23/15 18:40	KCA	SW8270D
2-Nitroaniline	ND	5.0		ug/L	1	11/23/15 18:40	KCA	SW8270D
2-Nitrophenol	ND	1.0		ug/L	1	11/23/15 18:40	KCA	SW8270D
3&4-Methylphenol (m&p-cresol)	ND	11		ug/L	1	11/23/15 18:40	KCA	SW8270D
3,3'-Dichlorobenzidine	ND	5.0		ug/L	1	11/23/15 18:40	KCA	SW8270D
3-Nitroaniline	ND	5.0		ug/L	1	11/23/15 18:40	KCA	SW8270D
4,6-Dinitro-2-methylphenol	ND	1.0		ug/L	1	11/23/15 18:40	KCA	SW8270D
4-Bromophenyl phenyl ether	ND	5.6		ug/L	1	11/23/15 18:40	KCA	SW8270D
4-Chloro-3-methylphenol	ND	1.0		ug/L	1	11/23/15 18:40	KCA	SW8270D
4-Chloroaniline	ND	5.0		ug/L	1	11/23/15 18:40	KCA	SW8270D
4-Chlorophenyl phenyl ether	ND	1.1		ug/L	1	11/23/15 18:40	KCA	SW8270D
4-Nitroaniline	ND	5.0		ug/L	1	11/23/15 18:40	KCA	SW8270D
4-Nitrophenol	ND	1.0		ug/L	1	11/23/15 18:40	KCA	SW8270D
Acetophenone	ND	5.6		ug/L	1	11/23/15 18:40	KCA	SW8270D
Aniline	ND	5.0		ug/L	1	11/23/15 18:40	KCA	SW8270D
Benzidine	ND	5.0		ug/L	1	11/23/15 18:40	KCA	SW8270D
Benzoic acid	ND	50		ug/L	1	11/23/15 18:40	KCA	SW8270D
Benzyl butyl phthalate	ND	5.6		ug/L	1	11/23/15 18:40	KCA	SW8270D
Bis(2-chloroethoxy)methane	ND	5.0		ug/L	1	11/23/15 18:40	KCA	SW8270D
Bis(2-chloroethyl)ether	ND	1.0		ug/L	1	11/23/15 18:40	KCA	SW8270D
Bis(2-chloroisopropyl)ether	ND	5.6		ug/L	1	11/23/15 18:40	KCA	SW8270D
Carbazole	ND	5.6		ug/L	1	11/23/15 18:40	KCA	SW8270D
Dibenzofuran	ND	5.0		ug/L	1	11/23/15 18:40	KCA	SW8270D
Diethyl phthalate	ND	5.6		ug/L	1	11/23/15 18:40	KCA	SW8270D
Dimethylphthalate	ND	5.6		ug/L	1	11/23/15 18:40	KCA	SW8270D
Di-n-butylphthalate	ND	5.6		ug/L	1	11/23/15 18:40	KCA	SW8270D
Di-n-octylphthalate	ND	5.6		ug/L	1	11/23/15 18:40	KCA	SW8270D
Hexachlorocyclopentadiene	ND	5.0		ug/L	1	11/23/15 18:40	KCA	SW8270D
Isophorone	ND	5.6		ug/L	1	11/23/15 18:40	KCA	SW8270D
N-Nitrosodimethylamine	ND	5.6		ug/L	1	11/23/15 18:40	KCA	SW8270D
N-Nitrosodi-n-propylamine	ND	5.6		ug/L	1	11/23/15 18:40	KCA	SW8270D
N-Nitrosodiphenylamine	ND	5.6		ug/L	1	11/23/15 18:40	KCA	SW8270D
Phenol	ND	1.0		ug/L	1	11/23/15 18:40	KCA	SW8270D
QA/QC Surrogates								
% 2,4,6-Tribromophenol	101			%	1	11/23/15 18:40	KCA	15 - 110 %
% 2-Fluorobiphenyl	68			%	1	11/23/15 18:40	KCA	30 - 130 %
% 2-Fluorophenol	51			%	1	11/23/15 18:40	KCA	15 - 110 %
% Nitrobenzene-d5	62			%	1	11/23/15 18:40	KCA	30 - 130 %
% Phenol-d5	66			%	1	11/23/15 18:40	KCA	15 - 110 %

Project ID: 526 UNION AVENUE
Client ID: MW SB 2

Phoenix I.D.: BK26210

Parameter	Result	RL/ PQL	LOD/ MDL	Units	Dilution	Date/Time	By	Reference	
% Terphenyl-d14	87			%	1	11/23/15 18:40	KCA	30 - 130 %	
Semivolatiles (SIM)									
1,2,4,5-Tetrachlorobenzene	ND	0.56		ug/L	1	11/23/15 19:01	DD	SW8270D (SIM)	
2-Methylnaphthalene	ND	1.1		ug/L	1	11/23/15 19:01	DD	SW8270D (SIM)	
Acenaphthene	ND	0.06		ug/L	1	11/23/15 19:01	DD	SW8270D (SIM)	
Acenaphthylene	ND	0.06		ug/L	1	11/23/15 19:01	DD	SW8270D (SIM)	
Anthracene	0.03	0.02		ug/L	1	11/23/15 19:01	DD	SW8270D (SIM)	
Benz(a)anthracene	ND	0.02		ug/L	1	11/23/15 19:01	DD	SW8270D (SIM)	
Benzo(a)pyrene	ND	0.02		ug/L	1	11/23/15 19:01	DD	SW8270D (SIM)	
Benzo(b)fluoranthene	ND	0.02		ug/L	1	11/23/15 19:01	DD	SW8270D (SIM)	
Benzo(ghi)perylene	ND	0.56		ug/L	1	11/23/15 19:01	DD	SW8270D (SIM)	
Benzo(k)fluoranthene	ND	0.02		ug/L	1	11/23/15 19:01	DD	SW8270D (SIM)	
Bis(2-ethylhexyl)phthalate	ND	0.56		ug/L	1	11/23/15 19:01	DD	SW8270D (SIM)	B
Chrysene	ND	0.02		ug/L	1	11/23/15 19:01	DD	SW8270D (SIM)	
Dibenz(a,h)anthracene	ND	0.02		ug/L	1	11/23/15 19:01	DD	SW8270D (SIM)	
Fluoranthene	ND	0.04		ug/L	1	11/23/15 19:01	DD	SW8270D (SIM)	
Fluorene	ND	0.11		ug/L	1	11/23/15 19:01	DD	SW8270D (SIM)	
Hexachlorobenzene	ND	0.04		ug/L	1	11/23/15 19:01	DD	SW8270D (SIM)	
Hexachlorobutadiene	ND	0.5		ug/L	1	11/23/15 19:01	DD	SW8270D (SIM)	
Hexachloroethane	ND	0.56		ug/L	1	11/23/15 19:01	DD	SW8270D (SIM)	
Indeno(1,2,3-cd)pyrene	ND	0.02		ug/L	1	11/23/15 19:01	DD	SW8270D (SIM)	
Naphthalene	ND	0.11		ug/L	1	11/23/15 19:01	DD	SW8270D (SIM)	
Nitrobenzene	ND	0.11		ug/L	1	11/23/15 19:01	DD	SW8270D (SIM)	
Pentachloronitrobenzene	ND	0.11		ug/L	1	11/23/15 19:01	DD	SW8270D (SIM)	
Pentachlorophenol	ND	0.89		ug/L	1	11/23/15 19:01	DD	SW8270D (SIM)	
Phenanthrene	ND	0.06		ug/L	1	11/23/15 19:01	DD	SW8270D (SIM)	
Pyrene	ND	0.02		ug/L	1	11/23/15 19:01	DD	SW8270D (SIM)	
Pyridine	ND	0.56		ug/L	1	11/23/15 19:01	DD	SW8270D (SIM)	
QA/QC Surrogates									
% 2,4,6-Tribromophenol	101			%	1	11/23/15 19:01	DD	15 - 110 %	
% 2-Fluorobiphenyl	68			%	1	11/23/15 19:01	DD	30 - 130 %	
% 2-Fluorophenol	51			%	1	11/23/15 19:01	DD	15 - 110 %	
% Nitrobenzene-d5	62			%	1	11/23/15 19:01	DD	30 - 130 %	
% Phenol-d5	66			%	1	11/23/15 19:01	DD	15 - 110 %	
% Terphenyl-d14	87			%	1	11/23/15 19:01	DD	30 - 130 %	

Parameter	Result	RL/ PQL	LOD/ MDL	Units	Dilution	Date/Time	By	Reference

1 = This parameter is not certified by NY NELAC for this matrix. NY NELAC does not offer certification for all parameters at this time.
B* = Present in blank, a bias is possible.
B = Present in blank, no bias suspected.

RL/PQL=Reporting/Practical Quantitation Level (Equivalent to NELAC LOQ, Limit of Quanitation) ND=Not Detected BRL=Below Reporting Level LOD=Limit of Detection MDL=Method Detection Limit
QA/QC Surrogates: Surrogates are compounds (preceeded with a %) added by the lab to determine analysis efficiency. Surrogate results(%) listed in the report are not "detected" compounds.

Comments:

Per 1.4.6 of EPA method 8270D, 1,2-Diphenylhydrazine is unstable and readily converts to Azobenzene. Azobenzene is used for the calibration of 1,2-Diphenylhydrazine.

Volatile Comment:
Elevated reporting limits due to the foamy nature of the sample.

Pesticide Comment:
Due to a matrix interference and/or the presence of a large amount of non-target material in the sample, an elevated RL was reported.

If there are any questions regarding this data, please call Phoenix Client Services at extension 200.
This report must not be reproduced except in full as defined by the attached chain of custody.

Phyllis Shiller, Laboratory Director
November 25, 2015
Reviewed and Released by: Bobbi Aloisa, Vice President

PHOENIX

Environmental Laboratories, Inc.
587 East Middle Turnpike, P.O.Box 370, Manchester, CT 06045
Tel. (860) 645-1102 Fax (860) 645-0823

ACCREDITED IN ACCORDANCE WITH nelac NY # 11301

Analysis Report

November 25, 2015

FOR: Attn:
Creative Environmental Solutions
39 West 37th Street, 14th Floor
New York, NY 10018

Sample Information		Custody Information		Date	Time
Matrix:	GROUND WATER	Collected by:		11/18/15	12:35
Location Code:	CREATENV	Received by:	SW	11/19/15	17:04
Rush Request:	72 Hour	Analyzed by:	see "By" below		
P.O.#:					

Laboratory Data

SDG ID: GBK26209
Phoenix ID: BK26211

Project ID: 526 UNION AVENUE
Client ID: MW SB 6

Parameter	Result	RL/ PQL	LOD/ MDL	Units	Dilution	Date/Time	By	Reference
Silver	< 0.001	0.001		mg/L	1	11/20/15 13:38	LK	SW6010C
Aluminum	13.8	0.010		mg/L	1	11/20/15 13:38	LK	SW6010C
Arsenic	0.011	0.004		mg/L	1	11/20/15 13:38	LK	SW6010C
Barium	0.282	0.002		mg/L	1	11/20/15 13:38	LK	SW6010C
Beryllium	< 0.001	0.001		mg/L	1	11/20/15 13:38	LK	SW6010C
Calcium	130	0.010		mg/L	1	11/20/15 13:38	LK	SW6010C
Cadmium	0.002	0.001		mg/L	1	11/20/15 13:38	LK	SW6010C
Cobalt	0.012	0.002		mg/L	1	11/20/15 13:38	LK	SW6010C
Chromium	0.031	0.001		mg/L	1	11/20/15 13:38	LK	SW6010C
Copper	0.068	0.005		mg/L	1	11/20/15 13:38	LK	SW6010C
Silver (Dissolved)	< 0.001	0.001		mg/L	1	11/20/15 10:14	LK	SW6010C
Aluminum (Dissolved)	0.187	0.021		mg/L	2	11/20/15 20:36	EK	SW6010C
Arsenic (Dissolved)	< 0.004	0.004		mg/L	1	11/20/15 10:14	LK	SW6010C
Barium (Dissolved)	0.108	0.002		mg/L	1	11/20/15 10:14	LK	SW6010C
Beryllium (Dissolved)	< 0.001	0.001		mg/L	1	11/20/15 10:14	LK	SW6010C
Calcium (Dissolved)	126	0.01		mg/L	1	11/20/15 10:14	LK	SW6010C
Cadmium (Dissolved)	< 0.001	0.001		mg/L	1	11/20/15 10:14	LK	SW6010C
Cobalt (Dissolved)	0.003	0.001		mg/L	1	11/20/15 10:14	LK	SW6010C
Chromium (Dissolved)	< 0.001	0.001		mg/L	1	11/20/15 10:14	LK	SW6010C
Copper (Dissolved)	< 0.005	0.005		mg/L	1	11/20/15 10:14	LK	SW6010C
Iron (Dissolved)	0.051	0.011		mg/L	1	11/20/15 10:14	LK	SW6010C
Mercury (Dissolved)	< 0.0002	0.0002		mg/L	1	11/23/15 11:52	RS	SW7470A
Potassium (Dissolved)	14.7	0.1		mg/L	1	11/20/15 10:14	LK	SW6010C
Magnesium (Dissolved)	23.6	0.01		mg/L	1	11/20/15 10:14	LK	SW6010C
Manganese (Dissolved)	0.605	0.001		mg/L	1	11/20/15 10:14	LK	SW6010C
Sodium (Dissolved)	32.2	0.11		mg/L	1	11/20/15 10:14	LK	SW6010C
Nickel (Dissolved)	0.013	0.001		mg/L	1	11/20/15 10:14	LK	SW6010C
Lead (Dissolved)	< 0.002	0.002		mg/L	1	11/20/15 10:14	LK	SW6010C

Parameter	Result	RL/ PQL	LOD/ MDL	Units	Dilution	Date/Time	By	Reference	
Antimony (Dissolved)	< 0.003	0.003		mg/L	1	11/20/15 10:14	LK	SW6010C	
Selenium (Dissolved)	0.003	0.002		mg/L	1	11/20/15 17:27	RS	E200.9/SM3113B-10	
Thallium (Dissolved)	< 0.0005	0.0005		mg/L	1	11/23/15 15:25	RS	SW7010	
Vanadium (Dissolved)	< 0.002	0.002		mg/L	1	11/20/15 10:14	LK	SW6010C	
Zinc (Dissolved)	0.117	0.002		mg/L	1	11/20/15 10:14	LK	SW6010C	
Iron	25.3	0.010		mg/L	1	11/20/15 13:38	LK	SW6010C	
Mercury	< 0.0002	0.0002		mg/L	1	11/20/15 11:52	RS	SW7470A	
Potassium	17.1	0.1		mg/L	1	11/20/15 13:38	LK	SW6010C	
Magnesium	26.9	0.01		mg/L	1	11/20/15 13:38	LK	SW6010C	
Manganese	0.917	0.001		mg/L	1	11/20/15 13:38	LK	SW6010C	
Sodium	33.9	0.1		mg/L	1	11/20/15 13:38	LK	SW6010C	
Nickel	0.038	0.001		mg/L	1	11/20/15 13:38	LK	SW6010C	B
Lead	0.187	0.002		mg/L	1	11/20/15 13:38	LK	SW6010C	
Antimony	< 0.003	0.003		mg/L	1	11/20/15 13:38	LK	SW6010C	
Selenium	< 0.010	0.010		mg/L	1	11/20/15 13:38	LK	SW6010C	
Thallium	< 0.0005	0.0005		mg/L	1	11/23/15 15:55	RS	SM3113B/SW7010-1	
Vanadium	0.035	0.002		mg/L	1	11/20/15 13:38	LK	SW6010C	
Zinc	0.361	0.002		mg/L	1	11/20/15 13:38	LK	SW6010C	
Filtration	Completed					11/19/15 00:00	AG	0.45um Filter	
Dissolved Mercury Digestion	Completed					11/23/15 00:00	W/W	SW7470A	
Mercury Digestion	Completed					11/20/15 00:00	W/W	SW7470A	
PCB Extraction (2 Liter)	Completed					11/23/15 00:00	L	SW3510C	
Extraction for Pest (2 Liter)	Completed					11/19/15 00:00	L	SW3510C	
Semi-Volatile Extraction	Completed					11/21/15 00:00	E/K/D	SW3520C	
Dissolved Metals Preparation	Completed					11/19/15 00:00	AG		
Total Metals Digestion	Completed					11/19/15 00:00	AG	SW3050B	

Polychlorinated Biphenyls

PCB-1016	ND	0.056	0.056	ug/L	1	11/21/15 01:52	AW	E608/SW8082A	
PCB-1221	ND	0.056	0.056	ug/L	1	11/21/15 01:52	AW	E608/SW8082A	
PCB-1232	ND	0.056	0.056	ug/L	1	11/21/15 01:52	AW	E608/SW8082A	
PCB-1242	ND	0.056	0.056	ug/L	1	11/21/15 01:52	AW	E608/SW8082A	
PCB-1248	ND	0.056	0.056	ug/L	1	11/21/15 01:52	AW	E608/SW8082A	
PCB-1254	ND	0.056	0.056	ug/L	1	11/21/15 01:52	AW	E608/SW8082A	
PCB-1260	ND	0.056	0.056	ug/L	1	11/21/15 01:52	AW	E608/SW8082A	
PCB-1262	ND	0.056	0.056	ug/L	1	11/21/15 01:52	AW	E608/SW8082A	
PCB-1268	ND	0.056	0.056	ug/L	1	11/21/15 01:52	AW	E608/SW8082A	
QA/QC Surrogates									
% DCBP	40			%	1	11/21/15 01:52	AW	30 - 150 %	
% TCMX	62			%	1	11/21/15 01:52	AW	30 - 150 %	

Pesticides

4,4' -DDD	ND	0.013		ug/L	5	11/24/15 14:06	CE	SW8081B	
4,4' -DDE	ND	0.013		ug/L	5	11/24/15 14:06	CE	SW8081B	
4,4' -DDT	ND	0.013		ug/L	5	11/24/15 14:06	CE	SW8081B	
a-BHC	ND	0.013		ug/L	5	11/24/15 14:06	CE	SW8081B	
Alachlor	ND	0.39		ug/L	5	11/24/15 14:06	CE	SW8081B	1
Aldrin	ND	0.008		ug/L	5	11/24/15 14:06	CE	SW8081B	
b-BHC	ND	0.026		ug/L	5	11/24/15 14:06	CE	SW8081B	
Chlordane	ND	0.26		ug/L	5	11/24/15 14:06	CE	SW8081B	

Parameter	Result	RL/ PQL	LOD/ MDL	Units	Dilution	Date/Time	By	Reference	
d-BHC	ND	0.026		ug/L	5	11/24/15 14:06	CE	SW8081B	
Dieldrin	ND	0.008		ug/L	5	11/24/15 14:06	CE	SW8081B	
Endosulfan I	ND	0.026		ug/L	5	11/24/15 14:06	CE	SW8081B	
Endosulfan II	ND	0.026		ug/L	5	11/24/15 14:06	CE	SW8081B	
Endosulfan Sulfate	ND	0.026		ug/L	5	11/24/15 14:06	CE	SW8081B	
Endrin	ND	0.026		ug/L	5	11/24/15 14:06	CE	SW8081B	
Endrin Aldehyde	ND	0.26		ug/L	5	11/24/15 14:06	CE	SW8081B	
Endrin ketone	ND	0.26		ug/L	5	11/24/15 14:06	CE	SW8081B	
g-BHC (Lindane)	ND	0.026		ug/L	5	11/24/15 14:06	CE	SW8081B	
Heptachlor	ND	0.026		ug/L	5	11/24/15 14:06	CE	SW8081B	
Heptachlor epoxide	ND	0.026		ug/L	5	11/24/15 14:06	CE	SW8081B	
Methoxychlor	ND	0.53		ug/L	5	11/24/15 14:06	CE	SW8081B	
Toxaphene	ND	5.3		ug/L	5	11/24/15 14:06	CE	SW8081B	
QA/QC Surrogates									
%DCBP (Surrogate Rec)	40			%	5	11/24/15 14:06	CE	30 - 150 %	
%TCMX (Surrogate Rec)	73			%	5	11/24/15 14:06	CE	30 - 150 %	

Volatiles

1,1,1,2-Tetrachloroethane	ND	2.0		ug/L	2	11/20/15 12:50	MH	SW8260C	
1,1,1-Trichloroethane	ND	2.0		ug/L	2	11/20/15 12:50	MH	SW8260C	
1,1,2,2-Tetrachloroethane	ND	1.0		ug/L	2	11/20/15 12:50	MH	SW8260C	
1,1,2-Trichloroethane	ND	2.0		ug/L	2	11/20/15 12:50	MH	SW8260C	
1,1-Dichloroethane	ND	2.0		ug/L	2	11/20/15 12:50	MH	SW8260C	
1,1-Dichloroethene	ND	2.0		ug/L	2	11/20/15 12:50	MH	SW8260C	
1,1-Dichloropropene	ND	2.0		ug/L	2	11/20/15 12:50	MH	SW8260C	
1,2,3-Trichlorobenzene	ND	2.0		ug/L	2	11/20/15 12:50	MH	SW8260C	
1,2,3-Trichloropropane	ND	2.0		ug/L	2	11/20/15 12:50	MH	SW8260C	
1,2,4-Trichlorobenzene	ND	2.0		ug/L	2	11/20/15 12:50	MH	SW8260C	
1,2,4-Trimethylbenzene	ND	2.0		ug/L	2	11/20/15 12:50	MH	SW8260C	
1,2-Dibromo-3-chloropropane	ND	2.0		ug/L	2	11/20/15 12:50	MH	SW8260C	
1,2-Dibromoethane	ND	2.0		ug/L	2	11/20/15 12:50	MH	SW8260C	
1,2-Dichlorobenzene	ND	2.0		ug/L	2	11/20/15 12:50	MH	SW8260C	
1,2-Dichloroethane	ND	1.2		ug/L	2	11/20/15 12:50	MH	SW8260C	
1,2-Dichloropropane	ND	2.0		ug/L	2	11/20/15 12:50	MH	SW8260C	
1,3,5-Trimethylbenzene	ND	2.0		ug/L	2	11/20/15 12:50	MH	SW8260C	
1,3-Dichlorobenzene	ND	2.0		ug/L	2	11/20/15 12:50	MH	SW8260C	
1,3-Dichloropropane	ND	2.0		ug/L	2	11/20/15 12:50	MH	SW8260C	
1,4-Dichlorobenzene	ND	2.0		ug/L	2	11/20/15 12:50	MH	SW8260C	
2,2-Dichloropropane	ND	2.0		ug/L	2	11/20/15 12:50	MH	SW8260C	
2-Chlorotoluene	ND	2.0		ug/L	2	11/20/15 12:50	MH	SW8260C	
2-Hexanone	ND	10		ug/L	2	11/20/15 12:50	MH	SW8260C	
2-Isopropyltoluene	ND	2.0		ug/L	2	11/20/15 12:50	MH	SW8260C	1
4-Chlorotoluene	ND	2.0		ug/L	2	11/20/15 12:50	MH	SW8260C	
4-Methyl-2-pentanone	ND	10		ug/L	2	11/20/15 12:50	MH	SW8260C	
Acetone	ND	50		ug/L	2	11/20/15 12:50	MH	SW8260C	
Acrylonitrile	ND	10		ug/L	2	11/20/15 12:50	MH	SW8260C	
Benzene	ND	1.4		ug/L	2	11/20/15 12:50	MH	SW8260C	
Bromobenzene	ND	2.0		ug/L	2	11/20/15 12:50	MH	SW8260C	
Bromochloromethane	ND	2.0		ug/L	2	11/20/15 12:50	MH	SW8260C	
Bromodichloromethane	ND	1.0		ug/L	2	11/20/15 12:50	MH	SW8260C	

Parameter	Result	RL/ PQL	LOD/ MDL	Units	Dilution	Date/Time	By	Reference	
Bromoform	ND	2.0		ug/L	2	11/20/15 12:50	MH	SW8260C	
Bromomethane	ND	2.0		ug/L	2	11/20/15 12:50	MH	SW8260C	
Carbon Disulfide	ND	10		ug/L	2	11/20/15 12:50	MH	SW8260C	
Carbon tetrachloride	ND	2.0		ug/L	2	11/20/15 12:50	MH	SW8260C	
Chlorobenzene	ND	2.0		ug/L	2	11/20/15 12:50	MH	SW8260C	
Chloroethane	ND	2.0		ug/L	2	11/20/15 12:50	MH	SW8260C	
Chloroform	ND	2.0		ug/L	2	11/20/15 12:50	MH	SW8260C	
Chloromethane	ND	2.0		ug/L	2	11/20/15 12:50	MH	SW8260C	
cis-1,2-Dichloroethene	ND	2.0		ug/L	2	11/20/15 12:50	MH	SW8260C	
cis-1,3-Dichloropropene	ND	0.80		ug/L	2	11/20/15 12:50	MH	SW8260C	
Dibromochloromethane	ND	1.0		ug/L	2	11/20/15 12:50	MH	SW8260C	
Dibromomethane	ND	2.0		ug/L	2	11/20/15 12:50	MH	SW8260C	
Dichlorodifluoromethane	ND	2.0		ug/L	2	11/20/15 12:50	MH	SW8260C	
Ethylbenzene	ND	2.0		ug/L	2	11/20/15 12:50	MH	SW8260C	
Hexachlorobutadiene	ND	0.80		ug/L	2	11/20/15 12:50	MH	SW8260C	
Isopropylbenzene	ND	2.0		ug/L	2	11/20/15 12:50	MH	SW8260C	
m&p-Xylene	ND	2.0		ug/L	2	11/20/15 12:50	MH	SW8260C	
Methyl ethyl ketone	ND	10		ug/L	2	11/20/15 12:50	MH	SW8260C	
Methyl t-butyl ether (MTBE)	2.8	2.0		ug/L	2	11/20/15 12:50	MH	SW8260C	
Methylene chloride	ND	2.0		ug/L	2	11/20/15 12:50	MH	SW8260C	
Naphthalene	ND	2.0		ug/L	2	11/20/15 12:50	MH	SW8260C	
n-Butylbenzene	ND	2.0		ug/L	2	11/20/15 12:50	MH	SW8260C	
n-Propylbenzene	ND	2.0		ug/L	2	11/20/15 12:50	MH	SW8260C	
o-Xylene	ND	2.0		ug/L	2	11/20/15 12:50	MH	SW8260C	
p-Isopropyltoluene	ND	2.0		ug/L	2	11/20/15 12:50	MH	SW8260C	
sec-Butylbenzene	ND	2.0		ug/L	2	11/20/15 12:50	MH	SW8260C	
Styrene	ND	2.0		ug/L	2	11/20/15 12:50	MH	SW8260C	
tert-Butylbenzene	ND	2.0		ug/L	2	11/20/15 12:50	MH	SW8260C	
Tetrachloroethene	ND	2.0		ug/L	2	11/20/15 12:50	MH	SW8260C	
Tetrahydrofuran (THF)	ND	5.0		ug/L	2	11/20/15 12:50	MH	SW8260C	1
Toluene	3.2	2.0		ug/L	2	11/20/15 12:50	MH	SW8260C	
Total Xylenes	ND	2.0		ug/L	2	11/20/15 12:50	MH	SW8260C	
trans-1,2-Dichloroethene	ND	2.0		ug/L	2	11/20/15 12:50	MH	SW8260C	
trans-1,3-Dichloropropene	ND	0.80		ug/L	2	11/20/15 12:50	MH	SW8260C	
trans-1,4-dichloro-2-butene	ND	10		ug/L	2	11/20/15 12:50	MH	SW8260C	
Trichloroethene	ND	2.0		ug/L	2	11/20/15 12:50	MH	SW8260C	
Trichlorofluoromethane	ND	2.0		ug/L	2	11/20/15 12:50	MH	SW8260C	
Trichlorotrifluoroethane	ND	2.0		ug/L	2	11/20/15 12:50	MH	SW8260C	
Vinyl chloride	ND	2.0		ug/L	2	11/20/15 12:50	MH	SW8260C	
QA/QC Surrogates									
% 1,2-dichlorobenzene-d4	98			%	2	11/20/15 12:50	MH	70 - 130 %	
% Bromofluorobenzene	91			%	2	11/20/15 12:50	MH	70 - 130 %	
% Dibromofluoromethane	104			%	2	11/20/15 12:50	MH	70 - 130 %	
% Toluene-d8	102			%	2	11/20/15 12:50	MH	70 - 130 %	

Semivolatiles

1,2,4-Trichlorobenzene	ND	5.4		ug/L	1	11/23/15 19:02	KCA	SW8270D
1,2-Dichlorobenzene	ND	2.7		ug/L	1	11/23/15 19:02	KCA	SW8270D
1,2-Diphenylhydrazine	ND	5.4		ug/L	1	11/23/15 19:02	KCA	SW8270D
1,3-Dichlorobenzene	ND	2.7		ug/L	1	11/23/15 19:02	KCA	SW8270D

Project ID: 526 UNION AVENUE
Client ID: MW SB 6

Phoenix I.D.: BK26211

Parameter	Result	RL/ PQL	LOD/ MDL	Units	Dilution	Date/Time	By	Reference
1,4-Dichlorobenzene	ND	2.7		ug/L	1	11/23/15 19:02	KCA	SW8270D
2,4,5-Trichlorophenol	ND	1.0		ug/L	1	11/23/15 19:02	KCA	SW8270D
2,4,6-Trichlorophenol	ND	1.0		ug/L	1	11/23/15 19:02	KCA	SW8270D
2,4-Dichlorophenol	ND	1.0		ug/L	1	11/23/15 19:02	KCA	SW8270D
2,4-Dimethylphenol	ND	1.0		ug/L	1	11/23/15 19:02	KCA	SW8270D
2,4-Dinitrophenol	ND	1.0		ug/L	1	11/23/15 19:02	KCA	SW8270D
2,4-Dinitrotoluene	ND	5.0		ug/L	1	11/23/15 19:02	KCA	SW8270D
2,6-Dinitrotoluene	ND	5.0		ug/L	1	11/23/15 19:02	KCA	SW8270D
2-Chloronaphthalene	ND	5.4		ug/L	1	11/23/15 19:02	KCA	SW8270D
2-Chlorophenol	ND	1.0		ug/L	1	11/23/15 19:02	KCA	SW8270D
2-Methylphenol (o-cresol)	ND	1.0		ug/L	1	11/23/15 19:02	KCA	SW8270D
2-Nitroaniline	ND	5.0		ug/L	1	11/23/15 19:02	KCA	SW8270D
2-Nitrophenol	ND	1.0		ug/L	1	11/23/15 19:02	KCA	SW8270D
3&4-Methylphenol (m&p-cresol)	ND	11		ug/L	1	11/23/15 19:02	KCA	SW8270D
3,3'-Dichlorobenzidine	ND	5.0		ug/L	1	11/23/15 19:02	KCA	SW8270D
3-Nitroaniline	ND	5.0		ug/L	1	11/23/15 19:02	KCA	SW8270D
4,6-Dinitro-2-methylphenol	ND	1.0		ug/L	1	11/23/15 19:02	KCA	SW8270D
4-Bromophenyl phenyl ether	ND	5.4		ug/L	1	11/23/15 19:02	KCA	SW8270D
4-Chloro-3-methylphenol	ND	1.0		ug/L	1	11/23/15 19:02	KCA	SW8270D
4-Chloroaniline	ND	5.0		ug/L	1	11/23/15 19:02	KCA	SW8270D
4-Chlorophenyl phenyl ether	ND	1.1		ug/L	1	11/23/15 19:02	KCA	SW8270D
4-Nitroaniline	ND	5.0		ug/L	1	11/23/15 19:02	KCA	SW8270D
4-Nitrophenol	ND	1.0		ug/L	1	11/23/15 19:02	KCA	SW8270D
Acetophenone	ND	5.4		ug/L	1	11/23/15 19:02	KCA	SW8270D
Aniline	ND	5.0		ug/L	1	11/23/15 19:02	KCA	SW8270D
Benzidine	ND	5.0		ug/L	1	11/23/15 19:02	KCA	SW8270D
Benzoic acid	ND	50		ug/L	1	11/23/15 19:02	KCA	SW8270D
Benzyl butyl phthalate	ND	5.4		ug/L	1	11/23/15 19:02	KCA	SW8270D
Bis(2-chloroethoxy)methane	ND	5.0		ug/L	1	11/23/15 19:02	KCA	SW8270D
Bis(2-chloroethyl)ether	ND	1.0		ug/L	1	11/23/15 19:02	KCA	SW8270D
Bis(2-chloroisopropyl)ether	ND	5.4		ug/L	1	11/23/15 19:02	KCA	SW8270D
Carbazole	ND	5.4		ug/L	1	11/23/15 19:02	KCA	SW8270D
Dibenzofuran	ND	5.0		ug/L	1	11/23/15 19:02	KCA	SW8270D
Diethyl phthalate	ND	5.4		ug/L	1	11/23/15 19:02	KCA	SW8270D
Dimethylphthalate	ND	5.4		ug/L	1	11/23/15 19:02	KCA	SW8270D
Di-n-butylphthalate	ND	5.4		ug/L	1	11/23/15 19:02	KCA	SW8270D
Di-n-octylphthalate	ND	5.4		ug/L	1	11/23/15 19:02	KCA	SW8270D
Hexachlorocyclopentadiene	ND	5.0		ug/L	1	11/23/15 19:02	KCA	SW8270D
Isophorone	ND	5.4		ug/L	1	11/23/15 19:02	KCA	SW8270D
N-Nitrosodimethylamine	ND	5.4		ug/L	1	11/23/15 19:02	KCA	SW8270D
N-Nitrosodi-n-propylamine	ND	5.4		ug/L	1	11/23/15 19:02	KCA	SW8270D
N-Nitrosodiphenylamine	ND	5.4		ug/L	1	11/23/15 19:02	KCA	SW8270D
Phenol	ND	1.0		ug/L	1	11/23/15 19:02	KCA	SW8270D
QA/QC Surrogates								
% 2,4,6-Tribromophenol	105			%	1	11/23/15 19:02	KCA	15 - 110 %
% 2-Fluorobiphenyl	75			%	1	11/23/15 19:02	KCA	30 - 130 %
% 2-Fluorophenol	68			%	1	11/23/15 19:02	KCA	15 - 110 %
% Nitrobenzene-d5	88			%	1	11/23/15 19:02	KCA	30 - 130 %
% Phenol-d5	71			%	1	11/23/15 19:02	KCA	15 - 110 %

Project ID: 526 UNION AVENUE
Client ID: MW SB 6

Phoenix I.D.: BK26211

Parameter	Result	RL/ PQL	LOD/ MDL	Units	Dilution	Date/Time	By	Reference	
% Terphenyl-d14	97			%	1	11/23/15 19:02	KCA	30 - 130 %	
Semivolatiles (SIM)									
1,2,4,5-Tetrachlorobenzene	ND	0.54		ug/L	1	11/23/15 19:30	DD	SW8270D (SIM)	
2-Methylnaphthalene	ND	1.1		ug/L	1	11/23/15 19:30	DD	SW8270D (SIM)	
Acenaphthene	0.10	0.05		ug/L	1	11/23/15 19:30	DD	SW8270D (SIM)	
Acenaphthylene	ND	0.05		ug/L	1	11/23/15 19:30	DD	SW8270D (SIM)	
Anthracene	0.07	0.02		ug/L	1	11/23/15 19:30	DD	SW8270D (SIM)	
Benz(a)anthracene	0.09	0.02		ug/L	1	11/23/15 19:30	DD	SW8270D (SIM)	
Benzo(a)pyrene	0.08	0.02		ug/L	1	11/23/15 19:30	DD	SW8270D (SIM)	
Benzo(b)fluoranthene	0.06	0.02		ug/L	1	11/23/15 19:30	DD	SW8270D (SIM)	
Benzo(ghi)perylene	ND	0.54		ug/L	1	11/23/15 19:30	DD	SW8270D (SIM)	
Benzo(k)fluoranthene	0.06	0.02		ug/L	1	11/23/15 19:30	DD	SW8270D (SIM)	
Bis(2-ethylhexyl)phthalate	ND	0.54		ug/L	1	11/23/15 19:30	DD	SW8270D (SIM)	B
Chrysene	0.08	0.02		ug/L	1	11/23/15 19:30	DD	SW8270D (SIM)	
Dibenz(a,h)anthracene	ND	0.02		ug/L	1	11/23/15 19:30	DD	SW8270D (SIM)	
Fluoranthene	0.21	0.04		ug/L	1	11/23/15 19:30	DD	SW8270D (SIM)	
Fluorene	ND	0.11		ug/L	1	11/23/15 19:30	DD	SW8270D (SIM)	
Hexachlorobenzene	ND	0.04		ug/L	1	11/23/15 19:30	DD	SW8270D (SIM)	
Hexachlorobutadiene	ND	0.54		ug/L	1	11/23/15 19:30	DD	SW8270D (SIM)	
Hexachloroethane	ND	0.54		ug/L	1	11/23/15 19:30	DD	SW8270D (SIM)	
Indeno(1,2,3-cd)pyrene	0.04	0.02		ug/L	1	11/23/15 19:30	DD	SW8270D (SIM)	
Naphthalene	ND	0.11		ug/L	1	11/23/15 19:30	DD	SW8270D (SIM)	
Nitrobenzene	ND	0.11		ug/L	1	11/23/15 19:30	DD	SW8270D (SIM)	
Pentachloronitrobenzene	ND	0.11		ug/L	1	11/23/15 19:30	DD	SW8270D (SIM)	
Pentachlorophenol	ND	0.86		ug/L	1	11/23/15 19:30	DD	SW8270D (SIM)	
Phenanthrene	0.18	0.05		ug/L	1	11/23/15 19:30	DD	SW8270D (SIM)	
Pyrene	0.18	0.02		ug/L	1	11/23/15 19:30	DD	SW8270D (SIM)	
Pyridine	ND	0.54		ug/L	1	11/23/15 19:30	DD	SW8270D (SIM)	
QA/QC Surrogates									
% 2,4,6-Tribromophenol	105			%	1	11/23/15 19:30	DD	15 - 110 %	
% 2-Fluorobiphenyl	75			%	1	11/23/15 19:30	DD	30 - 130 %	
% 2-Fluorophenol	68			%	1	11/23/15 19:30	DD	15 - 110 %	
% Nitrobenzene-d5	88			%	1	11/23/15 19:30	DD	30 - 130 %	
% Phenol-d5	71			%	1	11/23/15 19:30	DD	15 - 110 %	
% Terphenyl-d14	97			%	1	11/23/15 19:30	DD	30 - 130 %	

Parameter	Result	RL/ PQL	LOD/ MDL	Units	Dilution	Date/Time	By	Reference

1 = This parameter is not certified by NY NELAC for this matrix. NY NELAC does not offer certification for all parameters at this time.
B = Present in blank, no bias suspected.

RL/PQL=Reporting/Practical Quantitation Level (Equivalent to NELAC LOQ, Limit of Quanitation) ND=Not Detected BRL=Below Reporting Level LOD=Limit of Detection MDL=Method Detection Limit
QA/QC Surrogates: Surrogates are compounds (preceeded with a %) added by the lab to determine analysis efficiency. Surrogate results(%) listed in the report are not "detected" compounds.

Comments:

Per 1.4.6 of EPA method 8270D, 1,2-Diphenylhydrazine is unstable and readily converts to Azobenzene. Azobenzene is used for the calibration of 1,2-Diphenylhydrazine.

Volatile Comment:
Elevated reporting limits due to the foamy nature of the sample.

Pesticide Comment:
Due to a matrix interference and/or the presence of a large amount of non-target material in the sample, an elevated RL was reported.

If there are any questions regarding this data, please call Phoenix Client Services at extension 200.
This report must not be reproduced except in full as defined by the attached chain of custody.

Phyllis Shiller, Laboratory Director
November 25, 2015
Reviewed and Released by: Bobbi Aloisa, Vice President

PHOENIX

Environmental Laboratories, Inc.
587 East Middle Turnpike, P.O.Box 370, Manchester, CT 06045
Tel. (860) 645-1102 Fax (860) 645-0823

ACCREDITED IN ACCORDANCE WITH nelac NY # 11301

QA/QC Report

November 25, 2015

QA/QC Data

SDG I.D.: GBK26209

Parameter	Blank	Blk RL	Sample Result	Dup Result	Dup RPD	LCS %	LCSD %	LCS RPD	MS %	MSD %	MS RPD	% Rec Limits	% RPD Limits
QA/QC Batch 327290 (mg/L), QC Sample No: BK25245 (BK26209, BK26210, BK26211)													
Thallium - Water	BRL	0.001	<0.001	<0.001	NC	105	105	0.0	105	110	4.7	75 - 125	20
QA/QC Batch 327320 (mg/L), QC Sample No: BK25803 (BK26209, BK26210, BK26211)													
ICP Metals - Aqueous													
Aluminum	BRL	0.010	0.043	<0.010	NC	92.2	90.5	1.9	93.4	98.6	5.4	75 - 125	20
Antimony	BRL	0.005	0.033	0.032	3.10	96.7	97.1	0.4	99.9	99.1	0.8	75 - 125	20
Arsenic	BRL	0.004	<0.004	<0.004	NC	96.3	95.0	1.4	101	98.2	2.8	75 - 125	20
Barium	BRL	0.002	0.023	0.022	4.40	99.1	97.8	1.3	98.3	96.2	2.2	75 - 125	20
Beryllium	BRL	0.001	<0.001	<0.001	NC	98.9	97.1	1.8	100	98.1	1.9	75 - 125	20
Cadmium	BRL	0.001	<0.001	<0.001	NC	99.5	97.8	1.7	98.9	96.3	2.7	75 - 125	20
Calcium	BRL	0.010	20.9	20.3	2.90	99.0	97.1	1.9	NC	NC	NC	75 - 125	20
Chromium	BRL	0.001	0.009	0.009	0	97.1	96.0	1.1	97.7	94.6	3.2	75 - 125	20
Cobalt	BRL	0.002	<0.002	<0.002	NC	101	99.5	1.5	102	99.0	3.0	75 - 125	20
Copper	BRL	0.005	0.008	0.008	NC	97.6	96.6	1.0	99.1	97.1	2.0	75 - 125	20
Iron	BRL	0.010	0.602	0.588	2.40	99.8	98.3	1.5	96.0	93.0	3.2	75 - 125	20
Lead	BRL	0.002	0.002	0.003	NC	97.5	96.0	1.6	97.5	94.8	2.8	75 - 125	20
Magnesium	BRL	0.01	5.97	5.87	1.70	97.9	96.5	1.4	NC	NC	NC	75 - 125	20
Manganese	BRL	0.001	0.196	0.192	2.10	98.7	97.4	1.3	98.5	95.8	2.8	75 - 125	20
Nickel	0.001	0.001	0.002	0.002	NC	101	99.2	1.8	101	97.8	3.2	75 - 125	20
Potassium	BRL	0.1	30.7	29.7	3.30	100	99.5	0.5	NC	NC	NC	75 - 125	20
Selenium	BRL	0.010	<0.010	<0.010	NC	94.0	93.9	0.1	98.2	95.1	3.2	75 - 125	20
Silver	BRL	0.001	<0.001	<0.001	NC	94.9	93.9	1.1	97.5	96.0	1.6	75 - 125	20
Sodium	BRL	0.1	183	176	3.90	105	101	3.9	NC	NC	NC	75 - 125	20
Vanadium	BRL	0.002	0.008	0.007	NC	96.2	95.2	1.0	97.3	95.6	1.8	75 - 125	20
Zinc	BRL	0.002	0.043	0.041	4.80	97.5	96.0	1.6	101	98.9	2.1	75 - 125	20
QA/QC Batch 327333 (mg/L), QC Sample No: BK25942 (BK26209, BK26210, BK26211)													
Selenium (Dissolved)	BRL	0.002	<0.002	<0.002	NC	111	116	4.4	106	103	2.9	75 - 125	20
Thallium (Dissolved)	BRL	0.002	<0.001	<0.002	NC	108	111	2.7	90.6	88.9	1.9	75 - 125	20
QA/QC Batch 327335 (mg/L), QC Sample No: BK25943 (BK26209, BK26210, BK26211)													
ICP Metals - Dissolved													
Aluminum	BRL	0.011	<0.011	0.086	NC	86.7	89.2	2.8	93.7	94.1	0.4	75 - 125	20
Antimony	BRL	0.005	<0.005	<0.005	NC	93.1	94.6	1.6	92.4	94.3	2.0	75 - 125	20
Arsenic	BRL	0.004	0.004	0.003	NC	90.5	91.8	1.4	91.0	92.3	1.4	75 - 125	20
Barium	BRL	0.002	0.096	0.096	0	94.8	97.1	2.4	92.2	93.8	1.7	75 - 125	20
Beryllium	BRL	0.001	<0.001	<0.001	NC	93.1	94.4	1.4	92.2	92.4	0.2	75 - 125	20
Cadmium	BRL	0.001	<0.004	<0.001	NC	91.4	93.3	2.1	90.4	90.8	0.4	75 - 125	20
Calcium	BRL	0.01	26.2	26.5	1.10	89.3	90.7	1.6	NC	NC	NC	75 - 125	20
Chromium	BRL	0.001	<0.001	<0.001	NC	90.1	91.4	1.4	88.7	89.8	1.2	75 - 125	20
Cobalt	BRL	0.001	<0.005	<0.001	NC	94.0	95.5	1.6	91.9	93.1	1.3	75 - 125	20
Copper	BRL	0.005	<0.005	<0.005	NC	92.3	93.6	1.4	92.1	92.7	0.6	75 - 125	20
Iron	BRL	0.011	3.69	3.65	1.10	93.6	95.0	1.5	85.2	85.6	0.5	75 - 125	20
Lead	BRL	0.002	0.002	0.004	NC	90.8	92.4	1.7	88.1	89.4	1.5	75 - 125	20

QA/QC Data

SDG I.D.: GBK26209

Parameter	Blank	Blk RL	Sample Result	Dup Result	Dup RPD	LCS %	LCSD %	LCS RPD	MS %	MSD %	MS RPD	% Rec Limits	% RPD Limits
Magnesium	BRL	0.01	12.1	12.4	2.40	91.3	93.0	1.8	NC	NC	NC	75 - 125	20
Manganese	BRL	0.001	1.63	1.65	1.20	92.0	93.1	1.2	91.2	89.1	2.3	75 - 125	20
Nickel	BRL	0.001	<0.004	<0.001	NC	94.0	96.3	2.4	91.7	92.7	1.1	75 - 125	20
Potassium	BRL	0.1	7.5	7.3	2.70	94.8	97.1	2.4	89.3	91.3	2.2	75 - 125	20
Silver	BRL	0.001	<0.005	<0.001	NC	88.6	90.0	1.6	87.9	89.6	1.9	75 - 125	20
Sodium	BRL	0.11	40.8	40.1	1.70	94.9	97.5	2.7	NC	NC	NC	75 - 125	20
Vanadium	BRL	0.002	<0.011	<0.002	NC	89.0	90.1	1.2	88.7	89.5	0.9	75 - 125	20
Zinc	BRL	0.002	<0.011	<0.002	NC	90.8	92.2	1.5	90.4	91.2	0.9	75 - 125	20
QA/QC Batch 327347 (mg/L), QC Sample No: BK26209 (BK26209, BK26210, BK26211)													
Mercury - Water	BRL	0.0002	<0.0002	<0.0002	NC	113	100	12.2	101	106	4.8	70 - 130	20

Comment:

Additional Mercury criteria: LCS acceptance range for waters is 80-120% and for soils is 70-130%.

PHOENIX

Environmental Laboratories, Inc.
587 East Middle Turnpike, P.O.Box 370, Manchester, CT 06045
Tel. (860) 645-1102 Fax (860) 645-0823

ACCREDITED IN ACCORDANCE WITH nelac NY # 11301

QA/QC Report

November 25, 2015

QA/QC Data

SDG I.D.: GBK26209

QA/QC Batch 327439 (ug/L), QC Sample No: BK24049 (BK26209 (2X) , BK26210 (2X) , BK26211 (2X))

Volatiles - Ground Water

Parameter	Blank	Blk RL	LCS %	LCSD %	LCS RPD	MS %	MSD %	MS RPD	% Rec Limits	% RPD Limits	
1,1,1,2-Tetrachloroethane	ND	1.0	96	105	9.0				70 - 130	30	
1,1,1-Trichloroethane	ND	1.0	94	102	8.2				70 - 130	30	
1,1,2,2-Tetrachloroethane	ND	0.50	89	111	22.0				70 - 130	30	
1,1,2-Trichloroethane	ND	1.0	82	103	22.7				70 - 130	30	
1,1-Dichloroethane	ND	1.0	99	103	4.0				70 - 130	30	
1,1-Dichloroethene	ND	1.0	111	114	2.7				70 - 130	30	
1,1-Dichloropropene	ND	1.0	99	101	2.0				70 - 130	30	
1,2,3-Trichlorobenzene	ND	1.0	86	108	22.7				70 - 130	30	
1,2,3-Trichloropropane	ND	1.0	89	105	16.5				70 - 130	30	
1,2,4-Trichlorobenzene	ND	1.0	92	107	15.1				70 - 130	30	
1,2,4-Trimethylbenzene	ND	1.0	98	99	1.0				70 - 130	30	
1,2-Dibromo-3-chloropropane	ND	1.0	79	105	28.3				70 - 130	30	
1,2-Dibromoethane	ND	1.0	86	102	17.0				70 - 130	30	
1,2-Dichlorobenzene	ND	1.0	92	104	12.2				70 - 130	30	
1,2-Dichloroethane	ND	1.0	84	103	20.3				70 - 130	30	
1,2-Dichloropropane	ND	1.0	91	103	12.4				70 - 130	30	
1,3,5-Trimethylbenzene	ND	1.0	106	102	3.8				70 - 130	30	
1,3-Dichlorobenzene	ND	1.0	97	103	6.0				70 - 130	30	
1,3-Dichloropropane	ND	1.0	85	105	21.1				70 - 130	30	
1,4-Dichlorobenzene	ND	1.0	96	102	6.1				70 - 130	30	
2,2-Dichloropropane	ND	1.0	100	104	3.9				70 - 130	30	
2-Chlorotoluene	ND	1.0	102	101	1.0				70 - 130	30	
2-Hexanone	ND	5.0	75	104	32.4				70 - 130	30	r
2-Isopropyltoluene	ND	1.0	108	104	3.8				70 - 130	30	
4-Chlorotoluene	ND	1.0	100	100	0.0				70 - 130	30	
4-Methyl-2-pentanone	ND	5.0	73	106	36.9				70 - 130	30	r
Acetone	ND	5.0	84	107	24.1				70 - 130	30	
Acrylonitrile	ND	5.0	83	120	36.5				70 - 130	30	r
Benzene	ND	0.70	90	95	5.4				70 - 130	30	
Bromobenzene	ND	1.0	95	103	8.1				70 - 130	30	
Bromochloromethane	ND	1.0	88	106	18.6				70 - 130	30	
Bromodichloromethane	ND	0.50	91	105	14.3				70 - 130	30	
Bromoform	ND	1.0	85	107	22.9				70 - 130	30	
Bromomethane	ND	1.0	92	99	7.3				70 - 130	30	
Carbon Disulfide	ND	1.0	108	110	1.8				70 - 130	30	
Carbon tetrachloride	ND	1.0	96	102	6.1				70 - 130	30	
Chlorobenzene	ND	1.0	98	102	4.0				70 - 130	30	
Chloroethane	ND	1.0	108	116	7.1				70 - 130	30	
Chloroform	ND	1.0	91	101	10.4				70 - 130	30	
Chloromethane	ND	1.0	98	102	4.0				70 - 130	30	
cis-1,2-Dichloroethene	ND	1.0	91	101	10.4				70 - 130	30	

QA/QC Data

SDG I.D.: GBK26209

Parameter	Blank	Blk RL	LCS %	LCSD %	LCS RPD	MS %	MSD %	MS RPD	% Rec Limits	% RPD Limits	
cis-1,3-Dichloropropene	ND	0.40	83	100	18.6				70 - 130	30	
Dibromochloromethane	ND	0.50	87	106	19.7				70 - 130	30	
Dibromomethane	ND	1.0	86	107	21.8				70 - 130	30	
Dichlorodifluoromethane	ND	1.0	101	104	2.9				70 - 130	30	
Ethylbenzene	ND	1.0	103	103	0.0				70 - 130	30	
Hexachlorobutadiene	ND	0.40	110	105	4.7				70 - 130	30	
Isopropylbenzene	ND	1.0	107	100	6.8				70 - 130	30	
m&p-Xylene	ND	1.0	103	103	0.0				70 - 130	30	
Methyl ethyl ketone	ND	5.0	88	121	31.6				70 - 130	30	r
Methyl t-butyl ether (MTBE)	ND	1.0	79	109	31.9				70 - 130	30	r
Methylene chloride	ND	1.0	87	99	12.9				70 - 130	30	
Naphthalene	ND	1.0	85	111	26.5				70 - 130	30	
n-Butylbenzene	ND	1.0	106	104	1.9				70 - 130	30	
n-Propylbenzene	ND	1.0	100	96	4.1				70 - 130	30	
o-Xylene	ND	1.0	100	102	2.0				70 - 130	30	
p-Isopropyltoluene	ND	1.0	106	104	1.9				70 - 130	30	
sec-Butylbenzene	ND	1.0	113	109	3.6				70 - 130	30	
Styrene	ND	1.0	98	106	7.8				70 - 130	30	
tert-Butylbenzene	ND	1.0	106	102	3.8				70 - 130	30	
Tetrachloroethene	ND	1.0	97	99	2.0				70 - 130	30	
Tetrahydrofuran (THF)	ND	2.5	80	116	36.7				70 - 130	30	r
Toluene	ND	1.0	97	101	4.0				70 - 130	30	
trans-1,2-Dichloroethene	ND	1.0	105	108	2.8				70 - 130	30	
trans-1,3-Dichloropropene	ND	0.40	81	103	23.9				70 - 130	30	
trans-1,4-dichloro-2-butene	ND	5.0	84	110	26.8				70 - 130	30	
Trichloroethene	ND	1.0	101	104	2.9				70 - 130	30	
Trichlorofluoromethane	ND	1.0	102	109	6.6				70 - 130	30	
Trichlorotrifluoroethane	ND	1.0	108	114	5.4				70 - 130	30	
Vinyl chloride	ND	1.0	105	108	2.8				70 - 130	30	
% 1,2-dichlorobenzene-d4	98	%	96	103	7.0				70 - 130	30	
% Bromofluorobenzene	89	%	92	96	4.3				70 - 130	30	
% Dibromofluoromethane	94	%	96	105	9.0				70 - 130	30	
% Toluene-d8	101	%	98	99	1.0				70 - 130	30	

Comment:

A LCS and LCS Duplicate were performed instead of a matrix spike and matrix spike duplicate.

Additional 8260 criteria: 10% of LCS/LCSD compounds can be outside of acceptance criteria as long as recovery is 40-160%.

QA/QC Batch 327323 (ug/L), QC Sample No: BK25245 (BK26209, BK26210, BK26211)

Polychlorinated Biphenyls - Ground Water

PCB-1016	ND	0.050	77	78	1.3	111	92	18.7	40 - 140	20	
PCB-1221	ND	0.050							40 - 140	20	
PCB-1232	ND	0.050							40 - 140	20	
PCB-1242	ND	0.050							40 - 140	20	
PCB-1248	ND	0.050							40 - 140	20	
PCB-1254	ND	0.050							40 - 140	20	
PCB-1260	ND	0.050	74	84	12.7	66	72	8.7	40 - 140	20	
PCB-1262	ND	0.050							40 - 140	20	
PCB-1268	ND	0.050							40 - 140	20	
% DCBP (Surrogate Rec)	69	%	35	86	84.3	66	74	11.4	30 - 150	20	r
% TCMX (Surrogate Rec)	58	%	91	83	9.2	104	99	4.9	30 - 150	20	

Comment:

A LCS and LCS Duplicate were performed instead of a matrix spike and matrix spike duplicate.

QA/QC Data

SDG I.D.: GBK26209

QA/QC Batch 327657 (ug/L), QC Sample No: BK25512 (BK26209, BK26210, BK26211)

Pesticides - Ground Water

Parameter	Blank	Blk RL	LCS %	LCSD %	LCS RPD	MS %	MSD %	MS RPD	% Rec Limits	% RPD Limits
4,4' -DDD	ND	0.003	87	91	4.5				40 - 140	20
4,4' -DDE	ND	0.003	77	80	3.8				40 - 140	20
4,4' -DDT	ND	0.003	81	83	2.4				40 - 140	20
a-BHC	ND	0.002	80	86	7.2				40 - 140	20
a-Chlordane	ND	0.005	83	85	2.4				40 - 140	20
Alachlor	ND	0.005	NA	NA	NC				40 - 140	20
Aldrin	ND	0.002	83	87	4.7				40 - 140	20
b-BHC	ND	0.002	86	90	4.5				40 - 140	20
Chlordane	ND	0.050	77	79	2.6				40 - 140	20
d-BHC	ND	0.005	55	58	5.3				40 - 140	20
Dieldrin	ND	0.002	80	82	2.5				40 - 140	20
Endosulfan I	ND	0.005	85	88	3.5				40 - 140	20
Endosulfan II	ND	0.005	83	87	4.7				40 - 140	20
Endosulfan sulfate	ND	0.005	74	72	2.7				40 - 140	20
Endrin	ND	0.005	88	93	5.5				40 - 140	20
Endrin aldehyde	ND	0.005	84	89	5.8				40 - 140	20
Endrin ketone	ND	0.005	84	89	5.8				40 - 140	20
g-BHC	ND	0.002	82	87	5.9				40 - 140	20
g-Chlordane	ND	0.005	77	79	2.6				40 - 140	20
Heptachlor	ND	0.005	85	89	4.6				40 - 140	20
Heptachlor epoxide	ND	0.005	83	86	3.6				40 - 140	20
Methoxychlor	ND	0.005	88	97	9.7				40 - 140	20
Toxaphene	ND	0.20	NA	NA	NC				40 - 140	20
% DCBP	71	%	46	52	12.2				30 - 150	20
% TCMX	62	%	86	88	2.3				30 - 150	20

Comment:

A LCS and LCS duplicate were performed instead of a MS and MSD. Alpha and gamma chlordane were spiked and analyzed instead of technical chlordane. Gamma chlordane recovery is reported as chlordane in the LCS and LCSD

QA/QC Batch 327467 (ug/L), QC Sample No: BK25939 (BK26209, BK26210, BK26211)

Semivolatiles (SIM) - Ground Water

1,2,4,5-Tetrachlorobenzene	ND	0.50	74						30 - 130	20
2-Methylnaphthalene	ND	0.02	88						30 - 130	20
Acenaphthene	ND	0.02	88						30 - 130	20
Acenaphthylene	ND	0.02	114						30 - 130	20
Anthracene	ND	0.02	101						30 - 130	20
Benz(a)anthracene	ND	0.02	102						30 - 130	20
Benzo(a)pyrene	ND	0.02	101						30 - 130	20
Benzo(b)fluoranthene	ND	0.02	102						30 - 130	20
Benzo(ghi)perylene	ND	0.02	101						30 - 130	20
Benzo(k)fluoranthene	ND	0.02	96						30 - 130	20
Bis(2-ethylhexyl)phthalate	0.09	0.05	118						30 - 130	20
Chrysene	ND	0.02	87						30 - 130	20
Dibenz(a,h)anthracene	ND	0.01	101						30 - 130	20
Fluoranthene	ND	0.02	106						30 - 130	20
Fluorene	ND	0.02	99						30 - 130	20
Hexachlorobenzene	ND	0.02	93						30 - 130	20
Hexachlorobutadiene	ND	0.05	67						30 - 130	20
Hexachloroethane	ND	0.05	68						30 - 130	20
Indeno(1,2,3-cd)pyrene	ND	0.02	102						30 - 130	20
Naphthalene	ND	0.02	69						30 - 130	20

QA/QC Data

SDG I.D.: GBK26209

Parameter	Blank	Blk RL	LCS %	LCSD %	LCS RPD	MS %	MSD %	MS RPD	% Rec Limits	% RPD Limits	
Nitrobenzene	ND	0.05	73						30 - 130	20	
Pentachloronitrobenzene	ND	0.10	96						30 - 130	20	
Pentachlorophenol	ND	0.20	108						30 - 130	20	
Phenanthrene	ND	0.02	92						30 - 130	20	
Pyrene	ND	0.02	104						30 - 130	20	
Pyridine	ND	0.50	43						30 - 130	20	
% 2,4,6-Tribromophenol	80	%	90						15 - 110	20	
% 2-Fluorobiphenyl	59	%	78						30 - 130	20	
% 2-Fluorophenol	57	%	50						15 - 110	20	
% Nitrobenzene-d5	67	%	74						30 - 130	20	
% Phenol-d5	59	%	50						15 - 110	20	
% Terphenyl-d14	89	%	97						30 - 130	20	

Comment:

LCSD NOT REPORTED FOR THIS BATCH.

Additional 8270 criteria:20% of compounds can be outside of acceptance criteria as long as recovery is at least 10%. (Acid surrogates acceptance range for aqueous samples: 15-110%, for soils 30-130%)

QA/QC Batch 327467 (ug/L), QC Sample No: BK25939 (BK26209, BK26210, BK26211)

Semivolatiles - Ground Water

1,2,4-Trichlorobenzene	ND	3.5	66	49	29.6				30 - 130	20	r
1,2-Dichlorobenzene	ND	1.0	62	43	36.2				30 - 130	20	r
1,2-Diphenylhydrazine	ND	1.6	84	83	1.2				30 - 130	20	
1,3-Dichlorobenzene	ND	1.0	63	43	37.7				30 - 130	20	r
1,4-Dichlorobenzene	ND	1.0	64	44	37.0				30 - 130	20	r
2,4,5-Trichlorophenol	ND	1.0	84	84	0.0				30 - 130	20	
2,4,6-Trichlorophenol	ND	1.0	80	84	4.9				30 - 130	20	
2,4-Dichlorophenol	ND	1.0	72	67	7.2				30 - 130	20	
2,4-Dimethylphenol	ND	1.0	72	69	4.3				30 - 130	20	
2,4-Dinitrophenol	ND	1.0	103	103	0.0				30 - 130	20	
2,4-Dinitrotoluene	ND	3.5	93	91	2.2				30 - 130	20	
2,6-Dinitrotoluene	ND	3.5	89	87	2.3				30 - 130	20	
2-Chloronaphthalene	ND	3.5	76	71	6.8				30 - 130	20	
2-Chlorophenol	ND	1.0	60	43	33.0				30 - 130	20	r
2-Methylphenol (o-cresol)	ND	1.0	59	52	12.6				30 - 130	20	
2-Nitroaniline	ND	3.5	102	105	2.9				30 - 130	20	
2-Nitrophenol	ND	1.0	68	55	21.1				30 - 130	20	r
3&4-Methylphenol (m&p-cresol)	ND	1.0	65	61	6.3				30 - 130	20	
3,3'-Dichlorobenzidine	ND	5.0	53	80	40.6				30 - 130	20	r
3-Nitroaniline	ND	5.0	83	91	9.2				30 - 130	20	
4,6-Dinitro-2-methylphenol	ND	1.0	96	96	0.0				30 - 130	20	
4-Bromophenyl phenyl ether	ND	3.5	86	83	3.6				30 - 130	20	
4-Chloro-3-methylphenol	ND	1.0	87	86	1.2				30 - 130	20	
4-Chloroaniline	ND	3.5	51	69	30.0				30 - 130	20	r
4-Chlorophenyl phenyl ether	ND	1.0	81	80	1.2				30 - 130	20	
4-Nitroaniline	ND	5.0	95	93	2.1				30 - 130	20	
4-Nitrophenol	ND	1.0	97	86	12.0				15 - 130	20	
Acetophenone	ND	3.5	65	54	18.5				30 - 130	20	
Aniline	ND	3.5	34	43	23.4				30 - 130	20	r
Benzidine	ND	4.5	<10	155	NC				30 - 130	20	l
Benzoic acid	ND	10	76	53	35.7				30 - 130	20	r
Benzyl butyl phthalate	ND	1.5	94	95	1.1				30 - 130	20	
Bis(2-chloroethoxy)methane	ND	3.5	71	63	11.9				30 - 130	20	
Bis(2-chloroethyl)ether	ND	1.0	56	40	33.3				30 - 130	20	r

QA/QC Data

SDG I.D.: GBK26209

Parameter	Blank	Blk RL	LCS %	LCSD %	LCS RPD	MS %	MSD %	MS RPD	% Rec Limits	% RPD Limits	
Bis(2-chloroisopropyl)ether	ND	1.0	60	44	30.8				30 - 130	20	r
Carbazole	ND	5.0	91	93	2.2				30 - 130	20	
Dibenzofuran	ND	3.5	83	81	2.4				30 - 130	20	
Diethyl phthalate	ND	1.5	89	87	2.3				30 - 130	20	
Dimethylphthalate	ND	1.5	86	84	2.4				30 - 130	20	
Di-n-butylphthalate	ND	1.5	93	91	2.2				30 - 130	20	
Di-n-octylphthalate	ND	1.5	102	103	1.0				30 - 130	20	
Hexachlorocyclopentadiene	ND	3.5	68	45	40.7				30 - 130	20	r
Isophorone	ND	3.5	75	68	9.8				30 - 130	20	
N-Nitrosodimethylamine	ND	1.0	58	38	41.7				30 - 130	20	r
N-Nitrosodi-n-propylamine	ND	3.5	70	63	10.5				30 - 130	20	
N-Nitrosodiphenylamine	ND	3.5	51	81	45.5				30 - 130	20	r
Phenol	ND	1.0	53	39	30.4				15 - 130	20	r
% 2,4,6-Tribromophenol	70	%	78	83	6.2				15 - 110	20	
% 2-Fluorobiphenyl	57	%	72	68	5.7				30 - 130	20	
% 2-Fluorophenol	44	%	42	31	30.1				15 - 110	20	r
% Nitrobenzene-d5	57	%	63	49	25.0				30 - 130	20	r
% Phenol-d5	46	%	43	35	20.5				15 - 110	20	
% Terphenyl-d14	73	%	85	83	2.4				30 - 130	20	

Comment:

LCSD NOT REPORTED FOR THIS BATCH.

Additional 8270 criteria: 20% of compounds can be outside of acceptance criteria as long as recovery is at least 10%. (Acid surrogates acceptance range for aqueous samples: 15-110%, for soils 30-130%)

l = This parameter is outside laboratory LCS/LCSD specified recovery limits.
r = This parameter is outside laboratory RPD specified recovery limits.

If there are any questions regarding this data, please call Phoenix Client Services at extension 200.

RPD - Relative Percent Difference
LCS - Laboratory Control Sample
LCSD - Laboratory Control Sample Duplicate
MS - Matrix Spike
MS Dup - Matrix Spike Duplicate
NC - No Criteria
Intf - Interference

Phyllis Shiller, Laboratory Director
November 25, 2015

Sample Criteria Exceedences Report

GBK26209 - CREATENV

Criteria: NY: GW

State: NY

SampNo	Acode	Phoenix Analyte	Criteria	Result	RL	Criteria	RL Criteria	Analysis Units
BK26209	$8260GWR	Benzene	NY / TAGM - Volatile Organics / Groundwater Standards	ND	1.4	0.7	0.7	ug/L
BK26209	$8260GWR	1,2,3-Trichloropropane	NY / TOGS - Water Quality / GA Criteria	ND	2.0	0.04	0.04	ug/L
BK26209	$8260GWR	1,2-Dibromo-3-chloropropane	NY / TOGS - Water Quality / GA Criteria	ND	2.0	0.04	0.04	ug/L
BK26209	$8260GWR	1,2-Dibromoethane	NY / TOGS - Water Quality / GA Criteria	ND	2.0	0.0006	0.0006	ug/L
BK26209	$8260GWR	1,2-Dichloroethane	NY / TOGS - Water Quality / GA Criteria	ND	1.2	0.6	0.6	ug/L
BK26209	$8260GWR	1,2-Dichloropropane	NY / TOGS - Water Quality / GA Criteria	ND	2.0	1	1	ug/L
BK26209	$8260GWR	Acrylonitrile	NY / TOGS - Water Quality / GA Criteria	ND	10	5	5	ug/L
BK26209	$8260GWR	Benzene	NY / TOGS - Water Quality / GA Criteria	ND	1.4	1	1	ug/L
BK26209	$8260GWR	cis-1,3-Dichloropropene	NY / TOGS - Water Quality / GA Criteria	ND	0.80	0.4	0.4	ug/L
BK26209	$8260GWR	trans-1,3-Dichloropropene	NY / TOGS - Water Quality / GA Criteria	ND	0.80	0.4	0.4	ug/L
BK26209	$8260GWR	trans-1,4-dichloro-2-butene	NY / TOGS - Water Quality / GA Criteria	ND	10	5	5	ug/L
BK26209	$8260GWR	1,1,2-Trichloroethane	NY / TOGS - Water Quality / GA Criteria	ND	2.0	1	1	ug/L
BK26209	$8270-SIMR	Benz(a)anthracene	NY / TAGM - Semi-Volatiles / Groundwater Standards	0.40	0.02	0.002	0.002	ug/L
BK26209	$8270-SIMR	Benz(a)anthracene	NY / TOGS - Water Quality / GA Criteria	0.40	0.02	0.002	0.002	ug/L
BK26209	$8270-SIMR	Chrysene	NY / TAGM - Semi-Volatiles / Groundwater Standards	0.38	0.02	0.002	0.002	ug/L
BK26209	$8270-SIMR	Chrysene	NY / TOGS - Water Quality / GA Criteria	0.38	0.02	0.002	0.002	ug/L
BK26209	$8270-SIMR	Benzo(b)fluoranthene	NY / TAGM - Semi-Volatiles / Groundwater Standards	0.32	0.02	0.002	0.002	ug/L
BK26209	$8270-SIMR	Benzo(b)fluoranthene	NY / TOGS - Water Quality / GA Criteria	0.32	0.02	0.002	0.002	ug/L
BK26209	$8270-SIMR	Benzo(k)fluoranthene	NY / TAGM - Semi-Volatiles / Groundwater Standards	0.27	0.02	0.002	0.002	ug/L
BK26209	$8270-SIMR	Benzo(k)fluoranthene	NY / TOGS - Water Quality / GA Criteria	0.27	0.02	0.002	0.002	ug/L
BK26209	$8270-SIMR	Benzo(a)pyrene	NY / TAGM - Semi-Volatiles / Groundwater Standards	0.35	0.02	0.002	0.002	ug/L
BK26209	$8270-SIMR	Indeno(1,2,3-cd)pyrene	NY / TAGM - Semi-Volatiles / Groundwater Standards	0.16	0.02	0.002	0.002	ug/L
BK26209	$8270-SIMR	Indeno(1,2,3-cd)pyrene	NY / TOGS - Water Quality / GA Criteria	0.16	0.02	0.002	0.002	ug/L
BK26209	$PEST_GAWR	Chlordane	NY / TAGM - Pest/Herb/PCBs / Groundwater Standards	ND	0.28	0.1	0.1	ug/L
BK26209	$PEST_GAWR	Heptachlor	NY / TAGM - Pest/Herb/PCBs / Groundwater Standards	ND	0.028	0.01	0.01	ug/L
BK26209	$PEST_GAWR	Heptachlor epoxide	NY / TAGM - Pest/Herb/PCBs / Groundwater Standards	ND	0.028	0.01	0.01	ug/L
BK26209	$PEST_GAWR	Endrin	NY / TAGM - Pest/Herb/PCBs / Groundwater Standards	ND	0.028	0.01	0.01	ug/L
BK26209	$PEST_GAWR	4,4' -DDT	NY / TAGM - Pest/Herb/PCBs / Groundwater Standards	ND	0.028	0.01	0.01	ug/L
BK26209	$PEST_GAWR	4,4' -DDD	NY / TAGM - Pest/Herb/PCBs / Groundwater Standards	ND	0.028	0.01	0.01	ug/L
BK26209	$PEST_GAWR	4,4' -DDE	NY / TAGM - Pest/Herb/PCBs / Groundwater Standards	ND	0.028	0.01	0.01	ug/L
BK26209	$PEST_GAWR	Chlordane	NY / TOGS - Water Quality / GA Criteria	ND	0.28	0.05	0.05	ug/L
BK26209	$PEST_GAWR	Dieldrin	NY / TOGS - Water Quality / GA Criteria	ND	0.009	0.004	0.004	ug/L
BK26209	$PEST_GAWR	Toxaphene	NY / TOGS - Water Quality / GA Criteria	ND	1.1	0.06	0.06	ug/L
BK26209	$PEST_GAWR	a-BHC	NY / TOGS - Water Quality / GA Criteria	ND	0.014	0.01	0.01	ug/L
BK26209	AL-WM	Aluminum	NY / TOGS - Water Quality / GA Criteria	27.2	0.010	0.1	0.1	mg/L
BK26209	D-AL	Aluminum (Dissolved)	NY / TOGS - Water Quality / GA Criteria	0.132	0.021	0.1	0.1	mg/L
BK26209	D-MN	Manganese (Dissolved)	NY / TOGS - Water Quality / GA Criteria	2.01	0.001	0.3	0.3	mg/L
BK26209	D-NA	Sodium (Dissolved)	NY / TOGS - Water Quality / GA Criteria	22.8	0.11	20	20	mg/L
BK26209	FE-WM	Iron	NY / TOGS - Water Quality / GA Criteria	36.9	0.010	0.3	0.3	mg/L
BK26209	MN-WM	Manganese	NY / TOGS - Water Quality / GA Criteria	1.15	0.001	0.3	0.3	mg/L
BK26209	NA-WM	Sodium	NY / TOGS - Water Quality / GA Criteria	25.6	0.1	20	20	mg/L
BK26209	PB-WM	Lead	NY / TOGS - Water Quality / GA Criteria	0.187	0.002	0.025	0.025	mg/L

Sample Criteria Exceedences Report

GBK26209 - CREATENV

Criteria: NY: GW

State: NY

SampNo	Acode	Phoenix Analyte	Criteria	Result	RL	Criteria	RL Criteria	Analysis Units
BK26210	$8260GWR	Benzene	NY / TAGM - Volatile Organics / Groundwater Standards	ND	1.4	0.7	0.7	ug/L
BK26210	$8260GWR	trans-1,3-Dichloropropene	NY / TOGS - Water Quality / GA Criteria	ND	0.80	0.4	0.4	ug/L
BK26210	$8260GWR	cis-1,3-Dichloropropene	NY / TOGS - Water Quality / GA Criteria	ND	0.80	0.4	0.4	ug/L
BK26210	$8260GWR	1,2-Dibromo-3-chloropropane	NY / TOGS - Water Quality / GA Criteria	ND	2.0	0.04	0.04	ug/L
BK26210	$8260GWR	Benzene	NY / TOGS - Water Quality / GA Criteria	ND	1.4	1	1	ug/L
BK26210	$8260GWR	trans-1,4-dichloro-2-butene	NY / TOGS - Water Quality / GA Criteria	ND	10	5	5	ug/L
BK26210	$8260GWR	1,2-Dichloropropane	NY / TOGS - Water Quality / GA Criteria	ND	2.0	1	1	ug/L
BK26210	$8260GWR	1,2-Dibromoethane	NY / TOGS - Water Quality / GA Criteria	ND	2.0	0.0006	0.0006	ug/L
BK26210	$8260GWR	1,2,3-Trichloropropane	NY / TOGS - Water Quality / GA Criteria	ND	2.0	0.04	0.04	ug/L
BK26210	$8260GWR	1,1,2-Trichloroethane	NY / TOGS - Water Quality / GA Criteria	ND	2.0	1	1	ug/L
BK26210	$8260GWR	Acrylonitrile	NY / TOGS - Water Quality / GA Criteria	ND	10	5	5	ug/L
BK26210	$8260GWR	1,2-Dichloroethane	NY / TOGS - Water Quality / GA Criteria	ND	1.2	0.6	0.6	ug/L
BK26210	$8270-SIMR	Benz(a)anthracene	NY / TAGM - Semi-Volatiles / Groundwater Standards	ND	0.02	0.002	0.002	ug/L
BK26210	$8270-SIMR	Benz(a)anthracene	NY / TOGS - Water Quality / GA Criteria	ND	0.02	0.002	0.002	ug/L
BK26210	$8270-SIMR	Chrysene	NY / TAGM - Semi-Volatiles / Groundwater Standards	ND	0.02	0.002	0.002	ug/L
BK26210	$8270-SIMR	Chrysene	NY / TOGS - Water Quality / GA Criteria	ND	0.02	0.002	0.002	ug/L
BK26210	$8270-SIMR	Benzo(b)fluoranthene	NY / TAGM - Semi-Volatiles / Groundwater Standards	ND	0.02	0.002	0.002	ug/L
BK26210	$8270-SIMR	Benzo(b)fluoranthene	NY / TOGS - Water Quality / GA Criteria	ND	0.02	0.002	0.002	ug/L
BK26210	$8270-SIMR	Benzo(k)fluoranthene	NY / TAGM - Semi-Volatiles / Groundwater Standards	ND	0.02	0.002	0.002	ug/L
BK26210	$8270-SIMR	Benzo(k)fluoranthene	NY / TOGS - Water Quality / GA Criteria	ND	0.02	0.002	0.002	ug/L
BK26210	$8270-SIMR	Benzo(a)pyrene	NY / TAGM - Semi-Volatiles / Groundwater Standards	ND	0.02	0.002	0.002	ug/L
BK26210	$8270-SIMR	Indeno(1,2,3-cd)pyrene	NY / TAGM - Semi-Volatiles / Groundwater Standards	ND	0.02	0.002	0.002	ug/L
BK26210	$8270-SIMR	Indeno(1,2,3-cd)pyrene	NY / TOGS - Water Quality / GA Criteria	ND	0.02	0.002	0.002	ug/L
BK26210	$PEST_GAWR	4,4' -DDD	NY / TAGM - Pest/Herb/PCBs / Groundwater Standards	ND	0.013	0.01	0.01	ug/L
BK26210	$PEST_GAWR	4,4' -DDE	NY / TAGM - Pest/Herb/PCBs / Groundwater Standards	ND	0.013	0.01	0.01	ug/L
BK26210	$PEST_GAWR	4,4' -DDT	NY / TAGM - Pest/Herb/PCBs / Groundwater Standards	ND	0.013	0.01	0.01	ug/L
BK26210	$PEST_GAWR	Chlordane	NY / TAGM - Pest/Herb/PCBs / Groundwater Standards	ND	0.27	0.1	0.1	ug/L
BK26210	$PEST_GAWR	Endrin	NY / TAGM - Pest/Herb/PCBs / Groundwater Standards	ND	0.027	0.01	0.01	ug/L
BK26210	$PEST_GAWR	Heptachlor	NY / TAGM - Pest/Herb/PCBs / Groundwater Standards	ND	0.027	0.01	0.01	ug/L
BK26210	$PEST_GAWR	Heptachlor epoxide	NY / TAGM - Pest/Herb/PCBs / Groundwater Standards	ND	0.027	0.01	0.01	ug/L
BK26210	$PEST_GAWR	a-BHC	NY / TOGS - Water Quality / GA Criteria	ND	0.013	0.01	0.01	ug/L
BK26210	$PEST_GAWR	Chlordane	NY / TOGS - Water Quality / GA Criteria	ND	0.27	0.05	0.05	ug/L
BK26210	$PEST_GAWR	Dieldrin	NY / TOGS - Water Quality / GA Criteria	ND	0.008	0.004	0.004	ug/L
BK26210	$PEST_GAWR	Toxaphene	NY / TOGS - Water Quality / GA Criteria	ND	5.4	0.06	0.06	ug/L
BK26210	AL-WM	Aluminum	NY / TOGS - Water Quality / GA Criteria	1.58	0.010	0.1	0.1	mg/L
BK26210	D-AL	Aluminum (Dissolved)	NY / TOGS - Water Quality / GA Criteria	0.153	0.021	0.1	0.1	mg/L
BK26210	D-FE	Iron (Dissolved)	NY / TOGS - Water Quality / GA Criteria	1.28	0.011	0.3	0.3	mg/L
BK26210	D-MN	Manganese (Dissolved)	NY / TOGS - Water Quality / GA Criteria	1.98	0.001	0.3	0.3	mg/L
BK26210	D-NA	Sodium (Dissolved)	NY / TOGS - Water Quality / GA Criteria	22.8	0.11	20	20	mg/L
BK26210	FE-WM	Iron	NY / TOGS - Water Quality / GA Criteria	9.40	0.010	0.3	0.3	mg/L
BK26210	MN-WM	Manganese	NY / TOGS - Water Quality / GA Criteria	2.17	0.010	0.3	0.3	mg/L

Sample Criteria Exceedences Report

GBK26209 - CREATENV

Criteria: NY: GW
State: NY

SampNo	Acode	Phoenix Analyte	Criteria	Result	RL	Criteria	RL Criteria	Analysis Units
BK26210	NA-WM	Sodium	NY / TOGS - Water Quality / GA Criteria	23.8	0.1	20	20	mg/L
BK26211	$8260GWR	Benzene	NY / TAGM - Volatile Organics / Groundwater Standards	ND	1.4	0.7	0.7	ug/L
BK26211	$8260GWR	trans-1,3-Dichloropropene	NY / TOGS - Water Quality / GA Criteria	ND	0.80	0.4	0.4	ug/L
BK26211	$8260GWR	trans-1,4-dichloro-2-butene	NY / TOGS - Water Quality / GA Criteria	ND	10	5	5	ug/L
BK26211	$8260GWR	Hexachlorobutadiene	NY / TOGS - Water Quality / GA Criteria	ND	0.80	0.5	0.5	ug/L
BK26211	$8260GWR	cis-1,3-Dichloropropene	NY / TOGS - Water Quality / GA Criteria	ND	0.80	0.4	0.4	ug/L
BK26211	$8260GWR	Benzene	NY / TOGS - Water Quality / GA Criteria	ND	1.4	1	1	ug/L
BK26211	$8260GWR	1,2-Dichloropropane	NY / TOGS - Water Quality / GA Criteria	ND	2.0	1	1	ug/L
BK26211	$8260GWR	1,2-Dichloroethane	NY / TOGS - Water Quality / GA Criteria	ND	1.2	0.6	0.6	ug/L
BK26211	$8260GWR	1,2-Dibromoethane	NY / TOGS - Water Quality / GA Criteria	ND	2.0	0.0006	0.0006	ug/L
BK26211	$8260GWR	1,2-Dibromo-3-chloropropane	NY / TOGS - Water Quality / GA Criteria	ND	2.0	0.04	0.04	ug/L
BK26211	$8260GWR	1,2,3-Trichloropropane	NY / TOGS - Water Quality / GA Criteria	ND	2.0	0.04	0.04	ug/L
BK26211	$8260GWR	1,1,2-Trichloroethane	NY / TOGS - Water Quality / GA Criteria	ND	2.0	1	1	ug/L
BK26211	$8260GWR	Acrylonitrile	NY / TOGS - Water Quality / GA Criteria	ND	10	5	5	ug/L
BK26211	$8270-SIMR	Benzo(b)fluoranthene	NY / TAGM - Semi-Volatiles / Groundwater Standards	0.06	0.02	0.002	0.002	ug/L
BK26211	$8270-SIMR	Benz(a)anthracene	NY / TAGM - Semi-Volatiles / Groundwater Standards	0.09	0.02	0.002	0.002	ug/L
BK26211	$8270-SIMR	Indeno(1,2,3-cd)pyrene	NY / TAGM - Semi-Volatiles / Groundwater Standards	0.04	0.02	0.002	0.002	ug/L
BK26211	$8270-SIMR	Chrysene	NY / TAGM - Semi-Volatiles / Groundwater Standards	0.08	0.02	0.002	0.002	ug/L
BK26211	$8270-SIMR	Benzo(k)fluoranthene	NY / TAGM - Semi-Volatiles / Groundwater Standards	0.06	0.02	0.002	0.002	ug/L
BK26211	$8270-SIMR	Benzo(a)pyrene	NY / TAGM - Semi-Volatiles / Groundwater Standards	0.08	0.02	0.002	0.002	ug/L
BK26211	$8270-SIMR	Benzo(k)fluoranthene	NY / TOGS - Water Quality / GA Criteria	0.06	0.02	0.002	0.002	ug/L
BK26211	$8270-SIMR	Indeno(1,2,3-cd)pyrene	NY / TOGS - Water Quality / GA Criteria	0.04	0.02	0.002	0.002	ug/L
BK26211	$8270-SIMR	Chrysene	NY / TOGS - Water Quality / GA Criteria	0.08	0.02	0.002	0.002	ug/L
BK26211	$8270-SIMR	Hexachlorobutadiene	NY / TOGS - Water Quality / GA Criteria	ND	0.54	0.5	0.5	ug/L
BK26211	$8270-SIMR	Benz(a)anthracene	NY / TOGS - Water Quality / GA Criteria	0.09	0.02	0.002	0.002	ug/L
BK26211	$8270-SIMR	Benzo(b)fluoranthene	NY / TOGS - Water Quality / GA Criteria	0.06	0.02	0.002	0.002	ug/L
BK26211	$PEST_GAWR	Chlordane	NY / TAGM - Pest/Herb/PCBs / Groundwater Standards	ND	0.26	0.1	0.1	ug/L
BK26211	$PEST_GAWR	Heptachlor	NY / TAGM - Pest/Herb/PCBs / Groundwater Standards	ND	0.026	0.01	0.01	ug/L
BK26211	$PEST_GAWR	Heptachlor epoxide	NY / TAGM - Pest/Herb/PCBs / Groundwater Standards	ND	0.026	0.01	0.01	ug/L
BK26211	$PEST_GAWR	Endrin	NY / TAGM - Pest/Herb/PCBs / Groundwater Standards	ND	0.026	0.01	0.01	ug/L
BK26211	$PEST_GAWR	4,4' -DDT	NY / TAGM - Pest/Herb/PCBs / Groundwater Standards	ND	0.013	0.01	0.01	ug/L
BK26211	$PEST_GAWR	4,4' -DDD	NY / TAGM - Pest/Herb/PCBs / Groundwater Standards	ND	0.013	0.01	0.01	ug/L
BK26211	$PEST_GAWR	4,4' -DDE	NY / TAGM - Pest/Herb/PCBs / Groundwater Standards	ND	0.013	0.01	0.01	ug/L
BK26211	$PEST_GAWR	a-BHC	NY / TOGS - Water Quality / GA Criteria	ND	0.013	0.01	0.01	ug/L
BK26211	$PEST_GAWR	Chlordane	NY / TOGS - Water Quality / GA Criteria	ND	0.26	0.05	0.05	ug/L
BK26211	$PEST_GAWR	Dieldrin	NY / TOGS - Water Quality / GA Criteria	ND	0.008	0.004	0.004	ug/L
BK26211	$PEST_GAWR	Toxaphene	NY / TOGS - Water Quality / GA Criteria	ND	5.3	0.06	0.06	ug/L
BK26211	AL-WM	Aluminum	NY / TOGS - Water Quality / GA Criteria	13.8	0.010	0.1	0.1	mg/L
BK26211	D-AL	Aluminum (Dissolved)	NY / TOGS - Water Quality / GA Criteria	0.187	0.021	0.1	0.1	mg/L
BK26211	D-MN	Manganese (Dissolved)	NY / TOGS - Water Quality / GA Criteria	0.605	0.001	0.3	0.3	mg/L
BK26211	D-NA	Sodium (Dissolved)	NY / TOGS - Water Quality / GA Criteria	32.2	0.11	20	20	mg/L

Sample Criteria Exceedences Report

GBK26209 - CREATENV

Criteria: NY: GW

State: NY

SampNo	Acode	Phoenix Analyte	Criteria	Result	RL	Criteria	RL Criteria	Analysis Units
BK26211	FE-WM	Iron	NY / TOGS - Water Quality / GA Criteria	25.3	0.010	0.3	0.3	mg/L
BK26211	MN-WM	Manganese	NY / TOGS - Water Quality / GA Criteria	0.917	0.001	0.3	0.3	mg/L
BK26211	NA-WM	Sodium	NY / TOGS - Water Quality / GA Criteria	33.9	0.1	20	20	mg/L
BK26211	PB-WM	Lead	NY / TOGS - Water Quality / GA Criteria	0.187	0.002	0.025	0.025	mg/L

Phoenix Laboratories does not assume responsibility for the data contained in this report. It is provided as an additional tool to identify requested criteria exceedences. All efforts are made to ensure the accuracy of the data (obtained from appropriate agencies). A lack of exceedence information does not necessarily suggest conformance to the criteria. It is ultimately the site professional's responsibility to determine appropriate compliance.

Environmental Laboratories, Inc.
587 East Middle Turnpike, P.O.Box 370, Manchester, CT 06045
Tel. (860) 645-1102 Fax (860) 645-0823

NY Temperature Narration

November 25, 2015

SDG I.D.: GBK26209

The samples in this delivery group were received at 5°C.
(Note acceptance criteria is above freezing up to 6°C)

Cooler: Yes [X] No [ ]
Coolant: IPK [X] ICE [ ] No [ ]
Temp 5 °C Pg of

PHOENIX
Environmental Laboratories, Inc.

NY/NJ CHAIN OF CUSTODY RECORD

587 East Middle Turnpike, P.O. Box 370, Manchester, CT 06040
Email: info@phoenixlabs.com Fax (860) 645-0823
Client Services (860) 645-8726

Contact Options:
[ ] Fax:
[ ] Phone:
[X] Email: mmccormack@cescenter.com

Customer: CES
Address: 39 W 37th St
NY, NY 10018

Project: 526 Union Avenue
Report to: aaringo@cescenter.com
Invoice to: " "

Project P.O:

This section MUST be completed with Bottle Quantities.

Client Sample - Information - Identification

Sampler's Signature _____ Date: _____

Matrix Code:
DW=Drinking Water **GW**=Ground Water **SW**=Surface Water **WW**=Waste Water
RW=Raw Water **SE**=Sediment **SL**=Sludge **S**=Soil **SD**=Solid **W**=Wipe
OIL=Oil **B**=Bulk **L**=Liquid

Analysis Request: VOCs EPA 8260; SVOCs EPA 8270; PCBs 8081; Pesticides 8082; TAL Metals 6010

PHOENIX USE ONLY SAMPLE #	Customer Sample Identification	Sample Matrix	Date Sampled	Time Sampled	VOCs EPA 8260	SVOCs EPA 8270	PCBs 8081	Pesticides 8082	TAL Metals 6010	Soil VOA Vials [ ] methanol [ ] H2O	GL Soil container ( ) oz	GL Soil container ( ) oz	40 ml VOA Vial [ ] As is [ ] HCl	GL Amber 1000ml [X] As is [ ] H2SO4	PL As is [ ] 250ml [ ] 500ml [ ] 1000ml	PL H2SO4 [ ] 250ml [ ] 500ml [X] 1000ml	PL HNO3 250ml	PL NaOH 250ml	Bacteria Bottle
26209	MW5B1	GW	11/8	12:35									X	X			X		
26210	MW5B2	GW	11/8	15:05									X	X			X		
26211	MW5B6	GW	11/8	16:55									X	X			X		

Relinquished by:	Accepted by:	Date:	Time:
[signature]	[signature]	11-19-15	12:08
[signature]	Chandra	11/19/15	1704

Comments, Special Requirements or Regulations:

Turnaround:
[ ] 1 Day*
[ ] 2 Days*
[ ] 3 Days*
[ ] 5 Days*
[ ] 10 Days
[ ] Other
* SURCHARGE APPLIES

NJ
[ ] Res. Criteria
[ ] Non-Res. Criteria
[ ] Impact to GW Soil Cleanup Criteria
[ ] GW Criteria

NY
[ ] TAGM 4046 GW
[ ] TAGM 4046 SOIL
[ ] NY375 Unrestricted Use Soil
[ ] NY375 Residential Soil
[ ] Restricted/Residential
[ ] Commercial
[ ] Industrial

Data Format
[X] Phoenix Std Report
[X] Excel
[ ] PDF
[ ] GIS/Key
[X] EQuIS
[ ] NJ Hazsite EDD
[ ] NY EZ EDD (ASP)
[ ] Other

Data Package
[ ] NJ Reduced Deliv. *
[ ] NY Enhanced (ASP B) *
[ ] Other

State where samples were collected: NY

Bobbi - Phoenixlabs

From: Michael - Phoenixlabs [michael@phoenixlabs.com]
Sent: Friday, November 20, 2015 10:22 AM
To: bobbi@phoenixlabs.com
Subject: FW: Phoenix Labs - GBK26209, 526 UNION AVENUE - COC Acknowledgement
Attachments: Sample Acknowledgement.pdf

Bobbi:

I know I sent you this yesterday but CES did not put this on the COC. They need the metals analyzed for filtered and unfiltered samples. Thank you.

Regards,
Michael Lapman
Phoenix Environmental Laboratories, Inc.
587 East Middle Turnpike
Manchester, CT 06040
Direct Line: 917.449.0850
Laboratory: 860.812.0086
www.phoenixlabs.com

This message, including any attachments hereto, may contain privileged or confidential information and is sent solely for the attention and use of the intended addressee(s). If you are not an intended addressee, you may neither use this message nor copy or deliver it to anyone. In such case, you should immediately destroy this message and kindly notify the sender by reply email. Thank you.

From: clientservices@phoenixlabs.com [mailto:clientservices@phoenixlabs.com]
Sent: Friday, November 20, 2015 10:17 AM
To: michael@phoenixlabs.com
Subject: Phoenix Labs - GBK26209, 526 UNION AVENUE - COC Acknowledgement

Please email client services only if you Require a PO# on your Invoice, a PO# was not listed on the COC.

Delivery group GBK26209 (526 UNION AVENUE) has been logged in for the following samples:

Phoenix Id	Client Id
BK26209	MW SB 1
BK26210	MW SB 1
BK26211	MW SB 1

The samples in this delivery group were received at 5°C. (Note acceptance criteria is above freezing up

to 6°C)

If there are any questions regarding this submittal, please call Phoenix Client Services at extension 200.

Phoenix Environmental Laboratories, Inc.
587 East Middle Turnpike
P.O. Box 370
Manchester, CT 06374
Tel. (860) 645-1102
Fax. (860) 645-0823
www.phoenixlabs.com

Please do not reply to this email.

APPENDIX E

HISTORICAL ENIVRONMENTAL REPORTS

August 4, 3014

Mr. Isaac Hagar
Cornell Realty Management
75 Huntington St
Brooklyn, NY 11231

Re: **526 Union Avenue, Brooklyn, NY**
Block 2741 Lot 3

Dear Hagar:

Environmental Business Consultants (EBC) performed a Phase II subsurface investigation at the above referenced property on July 29, 2014 to assess the environmental condition of the property with respect to redevelopment under a Hazmat "E" designation. As you are aware, the property was assigned E - designations (E-138) for Hazmat during the Greenpoint - Williamsburg rezoning action completed by the City in October 2005. The E-designation will have to be addressed before building permits can be obtained. However, no action is required for the property in its current use.

Property Description
The street address for the Site is 818 Lexington Avenue, Brooklyn, New York 11211. The Site is identified as Block 2741, Lot 3 on the Borough of Brooklyn Tax Map (Kings County). The rectangular shaped lot is located on the east side of Union Avenue. The square shaped lot has 100 feet of frontage along Union Avenue is 100 feet deep for a total area of 10,000 ft^2 (0.229 acres).

Historically the property was used as a metal scrap yard from 1916 through 2007. Prior to 1916 it was used as a barrel storage yard. Some time after 2007 the scrap yard vacated the property. At the time of the investigation, the Site was being used as a parking area for cars and trucks.

Subsurface Investigation
The field work portion of the investigation was performed on July 29, 2014. The work consisted of the installation of six soil borings and three groundwater monitoring wells.

Soil Borings
Five soil boring locations (B1 through B5) were selected as shown on **Figure 2** to gain representative soil quality information from across the site.

All of the borings were advanced with Geoprobe™ direct push equipment and sampled with a 5 foot macro core sampler using disposable acetate liners. Retrieved sample cores were characterized by an Environmental Professional and field screened for the presence of volatile organic compounds (VOCs) using a photo-ionization detector (PID).

Soil was characterized as a brown silty sand with some historic fill material mixed in from surface grade to approximately 10 feet below grade followed by a grey-brown clay with organic matter to the termination depth. Based on the depth shallow to groundwater soil, soil samples were collected within the shallow fill and at the 8-10 foot groundwater interface.

Groundwater
EBC collected three groundwater samples on July 29, 2014 from three monitoring wells (MW1-MW3) as shown on **Figure 2**. Monitoring wells installed were 1" PVC advanced 15 feet below surface grade with 10 feet of slotted screen intersecting the water table, which was present at approximately 8 feet below grade. Groundwater samples were collected from each monitoring well utilizing s peristaltic pump and dedicated polyethylene tubing which was replaced between sampling locations.

Sample Handling and Analysis
Collected samples were appropriately packaged, placed in coolers and shipped via laboratory dispatched courier for delivery to Phoenix Environmental Laboratories (Phoenix) of 587 East Middle Turnpike, Manchester, CT 06040, a New York State ELAP certified environmental laboratory (ELAP Certification No. 11301). Soil samples were analyzed for one or more of the following parameters depending on depth: volatile organic compounds (VOCs) by USEPA method 8260, semi-volatile organic Compounds (SVOCs) by USEPA method 8270, TAL metals and TCLP metals. Groundwater samples were analyzed for VOCs by EPA method 8260.

Results

Soil
Soil sample results were compared to the Unrestricted Use and Restricted Residential Use Soil Cleanup Objectives (SCOs) as presented in NYSDEC CP51 Soil Cleanup Guidance (10/21/10). Analytical data for the soil samples are summarized in **Table 1** and a copy of the laboratory analytical report is included in **Appendix A**.

As presented in the attached table, with the exception of acetone (a common laboratory introduced contaminant) there were no VOCs or SVOCs detected above Unrestricted Use SCOs in any of the samples collected.

As presented in the attached table, one of more metals including, arsenic, barium, cadmium, chromium, lead, mercury, nickel, silver and zinc were detected above their Unrestricted or Restricted Residential Use SCOs in samples of the shallow fill at all five boring locations. No other metals were detected above their SCOs within the remainder of soil samples collected.

Groundwater
Groundwater results were compared to the New York State Ambient Water Quality Standards and Guidance Values (6 NYCRR Part 703) as presented in the Technical & Operational Guidance Series (TOGS) 1.1.1 (1998). Analytical data for the groundwater samples are summarized in the attached table. A copy of the laboratory analytical report is provided in **Appendix A**.

As presented in the attached table, there were several minor detections of VOCs in all three wells though none were reported above groundwater standards.

Conclusions and Recommendations

Subsurface soil at the site consisted of urban fill, which was primarily comprised of brick, concrete, wood and other debris in a brown sandy matrix to a depth of approximately 10 feet, underlain by native grey-black clay with organic matter to the termination depth of 15 feet below grade. The groundwater interface was encountered at approximately 8 feet below grade.

Several metals were reported in the fill materials above unrestricted and or restricted residential use SCOs. The concentrations were generally low and consistent with that commonly found in historic fill material found throughout the five boroughs. The 0-2 ft sample from the B5 location had high levels of barium and arsenic, however both parameters were well below their respective TCLP limits.

The VOC detections reported in groundwater are attributable to background conditions and were all well below groundwater standards.

Based on the results of the investigation, the past uses of the site have not impacted the soil or groundwater at the site and no further investigation is warranted. However, to meet the requirements of the E-designation program for redevelopment of the Site, special soil handling and disposal of excavated soil will need to be specified in a soil management plan before a Notice to Proceed can be obtained from the NYC Office of Environmental Remediation (OER).

Please call if you have any questions or would like to discuss the project further.

Very truly yours,
Environmental Business Consultant

Charles B. Sosik, P.G., P.H.G.
Principal

FIGURES

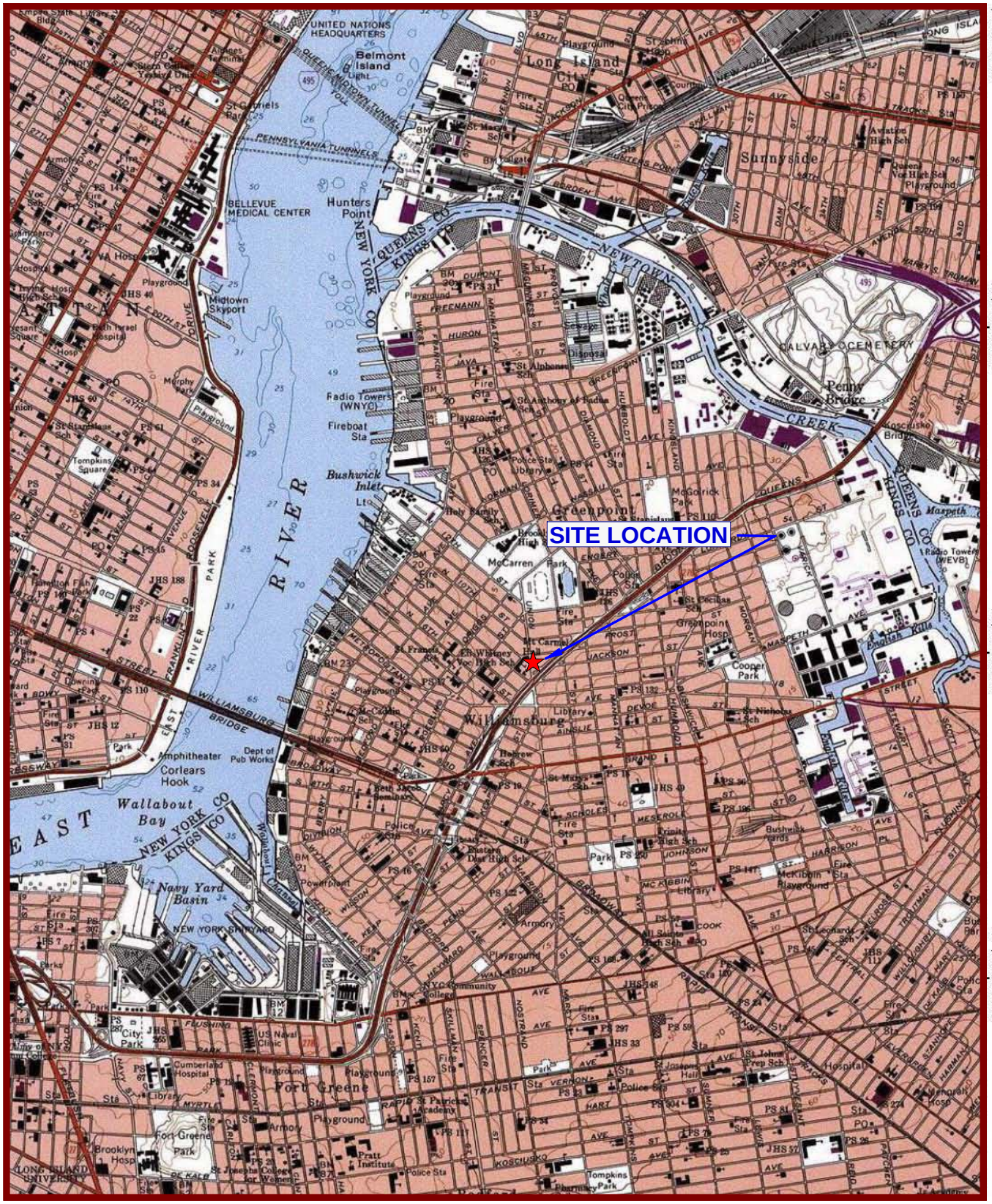

USGS Brooklyn Quadrangle 1995, Contour Interval = 10 feet

EBC
ENVIRONMENTAL BUSINESS CONSULTANTS
Phone 631.504.6000
Fax 631. 924 .2870

526 UNION AVENUE
BROOKLYN, NY

FIGURE 1 SITE LOCATION MAP

EBC
Environmental Business Consultants
1808 Middle Country Road, Ridge, NY 11961
Phone: 631.504.6000
Fax: 631.924.2780

526 Union Avenue
Brooklyn, NY

FIGURE 2 Sampling Locations

TABLES

Phoenix Environmental Laboratories, Inc.
587 East Middle Turnpike
P.O. Box 370
Manchester, CT 06040
(860) 645-1102

Project Id : 526 UNION AVE., BROOKLYN

	Units	40 CFR 261.24	NY-Res.	NY-ResRestrict	NY-UnRestricted	TAGM-GW	TOGS-WQ/GA
Lab Sample Id							
Collection Date							
Client Id							
Matrix							
Miscellaneous/Inorganics							
Percent Solid	%						
Metals, Total							
Aluminum	mg/Kg						
Antimony	mg/Kg						
Arsenic	mg/Kg		16	16	13		
Barium	mg/Kg		350	400	350		
Beryllium	mg/Kg		14	72	7.2		
Cadmium	mg/Kg		2.5	4.3	2.5		
Calcium	mg/Kg						
Chromium	mg/Kg				30		
Cobalt	mg/Kg						
Copper	mg/Kg		270	270	50		
Iron	mg/Kg						
Lead	mg/Kg		400	400	63		
Magnesium	mg/Kg						
Manganese	mg/Kg		2,000	2,000	1,600		
Mercury	mg/Kg		0.81	0.81	0.18		
Nickel	mg/Kg		140	310	30		
Potassium	mg/Kg						
Selenium	mg/Kg		36	180	3.9		
Silver	mg/Kg		36	180	2		
Sodium	mg/Kg						
Thallium	mg/Kg						
Vanadium	mg/Kg						
Zinc	mg/Kg		2,200	10,000	109		
Metals, TCLP							
TCLP Arsenic	mg/L	5					
TCLP Barium	mg/L	100					
TCLP Cadmium	mg/L	1					
TCLP Chromium	mg/L	5					
TCLP Lead	mg/L	5					
TCLP Mercury	mg/L	0.2					
TCLP Selenium	mg/L	1					
TCLP Silver	mg/L	5					
Volatiles By SW8260							
1,1,1,2-Tetrachloroethane	ug/L						5
1,1,1-Trichloroethane	ug/L					5	5
1,1,2,2-Tetrachloroethane	ug/L					5	5
1,1,2-Trichloroethane	ug/L						1
1,1-Dichloroethane	ug/L					5	5
1,1-Dichloroethene	ug/L					5	5
1,1-Dichloropropene	ug/L						5
1,2,3-Trichlorobenzene	ug/L						
1,2,3-Trichloropropane	ug/L					5	0.04
1,2,4-Trichlorobenzene	ug/L						
1,2,4-Trimethylbenzene	ug/L						5
1,2-Dibromo-3-chloropropane	ug/L						0.04
1,2-Dibromoethane	ug/L						0.0006
1,2-Dichlorobenzene	ug/L					4.7	
1,2-Dichloroethane	ug/L					5	0.6
1,2-Dichloropropane	ug/L						1
1,3,5-Trimethylbenzene	ug/L						5
1,3-Dichlorobenzene	ug/L					5	3
1,3-Dichloropropane	ug/L					5	5
1,4-Dichlorobenzene	ug/L					5	
2,2-Dichloropropane	ug/L						5
2-Chlorotoluene	ug/L						5
2-Hexanone	ug/L						50
2-Isopropyltoluene	ug/L						5
4-Chlorotoluene	ug/L						5
4-Methyl-2-pentanone	ug/L					50	
Acetone	ug/L					50	50
Acrolein	ug/L						5
Acrylonitrile	ug/L						5
Benzene	ug/L					0.7	1
Bromobenzene	ug/L						5
Bromochloromethane	ug/L						5
Bromodichloromethane	ug/L						50
Bromoform	ug/L						50
Bromomethane	ug/L						5
Carbon Disulfide	ug/L					50	
Carbon tetrachloride	ug/L					5	5
Chlorobenzene	ug/L					5	5
Chloroethane	ug/L					50	5
Chloroform	ug/L					7	7
Chloromethane	ug/L						5
cis-1,2-Dichloroethene	ug/L						5
cis-1,3-Dichloropropene	ug/L						0.4
Dibromochloromethane	ug/L					50	50
Dibromomethane	ug/L						5
Dichlorodifluoromethane	ug/L						5
Ethylbenzene	ug/L					5	5
Hexachlorobutadiene	ug/L						0.5
Isopropylbenzene	ug/L						5
m&p-Xylene	ug/L						
Methyl ethyl ketone	ug/L					50	50
Methyl t-butyl ether (MTBE)	ug/L						

Lab Sample Id	BG85525		BG85526		BG85527		BG85528		BG85529		BG85530		BG85531		BG85532		BG85533		BG85534		BG85535		BG85536		BG85537	
Collection Date	7/29/2014		7/29/2014		7/29/2014		7/29/2014		7/29/2014		7/29/2014		7/29/2014		7/29/2014		7/29/2014		7/29/2014		7/29/2014		7/29/2014		7/29/2014	
Client Id	B1 0-2		B1 8-10		B2 3-5		B2 8-10		B3 0-2		B3 8-10		B4 2-4		B4 8-10		B5 0-2		B5 8-10		GW1		GW2		GW3	
Matrix	Soil		Soil		Soil		Soil		Soil		Soil		Soil		Soil		Soil		Soil		Ground Water		Ground Water		Ground Water	
	Result	RL	Result	RL	Result	RL	Result	RL	Result	RL	Result	RL	Result	RL	Result	RL	Result	RL	Result	RL	Result	RL	Result	RL	Result	RL
Miscellaneous/Inorganics																										
Percent Solid	94		76		89		81		87		77		89		81		85		75							
Metals, Total																										
Aluminum	7,360	33			5,040	33			5,860	38			4,010	35			5,630	38								
Antimony	< 1.6	1.6			< 1.7	1.7			< 1.9	1.9			< 1.7	1.7			50.3	1.9								
Arsenic	2.6	0.7			4.3	0.7			4.3	0.8			6.2	0.7			108	0.8								
Barium	56	0.7			76.6	0.7			69.3	0.8			56.6	0.7			2,730	7.6								
Beryllium	0.47	0.26			0.38	0.26			< 0.30	0.3			< 0.28	0.28			0.6	0.31								
Cadmium	0.7	0.33			0.6	0.33			1.69	0.38			5.48	0.35			42.7	0.38								
Calcium	1,520	3.3			2,100	3.3			50,900	38			869	3.5			8,820	3.8								
Chromium	21.1	0.33			23.9	0.33			33.1	0.38			19.1	0.35			198	3.8								
Cobalt	8.04	0.33			4.82	0.33			5.7	0.38			16.6	0.35			43.9	0.38								
Copper	33.1	0.33			12	0.33			49.4	0.38			41.6	0.35												
Iron	19,500	33			13,900	33			16,400	38																
Lead	109	0.7			166	6.6			85.7	0.8			241	6.9												
Magnesium	2,320	3.3			1,050	3.3			13,300	38			451	3.5			2,310	3.8								
Manganese	232	3.3			127	3.3			212	3.8			776	3.5												
Mercury	0.27	0.07			0.53	0.06			30.9	3.3			0.64	0.08			16.9	3.9								
Nickel	14.4	0.33			15.5	0.33			18.1	0.38			21.8	0.35			323	3.8								
Potassium	1,320	7			1,460	7			1,110	8			994	7			502	8								
Selenium	< 1.3	1.3			< 1.3	1.3			< 1.5	1.5			< 1.4	1.4			< 1.5	1.5								
Silver	< 0.33	0.33			< 0.33	0.33			< 0.38	0.38			< 0.35	0.35			7.29	0.38								
Sodium	101	7			109	7			184	8			99	7			290	8								
Thallium	< 1.3	1.3			< 1.3	1.3			< 1.5	1.5			< 1.4	1.4			< 1.5	1.5								
Vanadium	28.8	0.3			17.8	0.3			30.3	0.4			35.3	0.3			46	0.4								
Zinc	75.8	0.7			417	6.6			124	0.8			192	6.9												
Metals, TCLP																										
TCLP Arsenic	< 0.10	0.1			< 0.10	0.1			< 0.10	0.1			< 0.10	0.1			< 0.10	0.1								
TCLP Barium	< 0.10	0.1			0.3	0.1			0.93	0.1			0.21	0.1			1.55	0.1								
TCLP Cadmium	< 0.050	0.05			< 0.050	0.05							< 0.050	0.05			0.273	0.05								
TCLP Chromium	1.25	0.1			< 0.10	0.1			0.23	0.1			< 0.10	0.1			< 0.10	0.1								
TCLP Lead	< 0.10	0.1			0.17	0.1			3.37	0.1			0.45	0.1												
TCLP Mercury	< 0.0002	0.0002			< 0.0002	0.0002			< 0.0002	0.0002			< 0.0002	0.0002			0.0005	0.0002								
TCLP Selenium	< 0.10	0.1			< 0.10	0.1			< 0.10	0.1			< 0.10	0.1			< 0.10	0.1								
TCLP Silver	< 0.10	0.1			< 0.10	0.1			< 0.10	0.1			< 0.10	0.1			< 0.10	0.1								
Volatiles By SW8260																										
1,1,1,2-Tetrachloroethane																					< 1.0	1	< 1.0	1	< 1.0	1
1,1,1-Trichloroethane																					< 5.0	5	< 5.0	5	< 5.0	5
1,1,2,2-Tetrachloroethane																					< 1.0	1	< 1.0	1	< 1.0	1
1,1,2-Trichloroethane																					< 1.0	1	< 1.0	1	< 1.0	1
1,1-Dichloroethane																					< 5.0	5	0.38	5	< 5.0	5
1,1-Dichloroethene																					< 1.0	1	< 1.0	1	< 1.0	1
1,1-Dichloropropene																					< 1.0	1	< 1.0	1	< 1.0	1
1,2,3-Trichlorobenzene																					< 1.0	1	< 1.0	1	< 1.0	1
1,2,3-Trichloropropane																					< 1.0	1	< 1.0	1	< 1.0	1
1,2,4-Trichlorobenzene																					< 1.0	1	< 1.0	1	< 1.0	1
1,2,4-Trimethylbenzene																					< 1.0	1	< 1.0	1	< 1.0	1
1,2-Dibromo-3-chloropropane																					< 1.0	1	< 1.0	1	< 1.0	1
1,2-Dibromoethane																					< 1.0	1	< 1.0	1	< 1.0	1
1,2-Dichlorobenzene																					< 1.0	1	< 1.0	1	< 1.0	1
1,2-Dichloroethane																					< 0.60	0.6	< 0.60	0.6	< 0.60	0.6
1,2-Dichloropropane																					< 1.0	1	< 1.0	1	< 1.0	1
1,3,5-Trimethylbenzene																					< 1.0	1	< 1.0	1	< 1.0	1
1,3-Dichlorobenzene																					< 5.0	5	< 5.0	5	< 5.0	5
1,3-Dichloropropane																					< 1.0	1	< 1.0	1	< 1.0	1
1,4-Dichlorobenzene																					< 5.0	5	< 5.0	5	< 5.0	5
2,2-Dichloropropane																					< 1.0	1	< 1.0	1	< 1.0	1
2-Chlorotoluene																					< 1.0	1	< 1.0	1	< 1.0	1
2-Hexanone																					< 1.0	1	< 1.0	1	< 1.0	1
2-Isopropyltoluene																					< 1.0	1	< 1.0	1	< 1.0	1
4-Chlorotoluene																					< 1.0	1	< 1.0	1	< 1.0	1
4-Methyl-2-pentanone																					< 1.0	1	< 1.0	1	< 1.0	1
Acetone																					9.9	5	12	5	9	5
Acrolein																					< 5.0	5	< 5.0	5	< 5.0	5
Acrylonitrile																					< 5.0	5	< 5.0	5	< 5.0	5
Benzene																					0.21	0.7	< 0.70	0.7	< 0.70	0.7
Bromobenzene																					< 1.0	1	< 1.0	1	< 1.0	1
Bromochloromethane																					< 1.0	1	< 1.0	1	< 1.0	1
Bromodichloromethane																					< 1.0	1	< 1.0	1	< 1.0	1
Bromoform																					< 5.0	5	< 5.0	5	< 5.0	5
Bromomethane																					< 5.0	5	< 5.0	5	< 5.0	5
Carbon Disulfide																					< 1.0	1	< 1.0	1	0.38	1
Carbon tetrachloride																					< 1.0	1	< 1.0	1	< 1.0	1
Chlorobenzene																					< 5.0	5	< 5.0	5	< 5.0	5
Chloroethane																					< 5.0	5	< 5.0	5	< 5.0	5
Chloroform																					2.4	5	< 5.0	5	< 5.0	5
Chloromethane																					< 5.0	5	< 5.0	5	< 5.0	5
cis-1,2-Dichloroethene																					< 1.0	1	< 1.0	1	< 1.0	1
cis-1,3-Dichloropropene																					< 0.40	0.4	< 0.40	0.4	< 0.40	0.4
Dibromochloromethane																					< 1.0	1	< 1.0	1	< 1.0	1
Dibromomethane																					< 1.0	1	< 1.0	1	< 1.0	1
Dichlorodifluoromethane																					< 1.0	1	< 1.0	1	< 1.0	1
Ethylbenzene																					< 1.0	1	< 1.0	1	< 1.0	1
Hexachlorobutadiene																					< 1.0	1	< 1.0	1	< 1.0	1
Isopropylbenzene																					< 1.0	1	< 1.0	1	< 1.0	1
m&p-Xylene																					< 1.0	1	< 1.0	1	< 1.0	1
Methyl ethyl ketone																					1.5	1	< 1.0	1	0.65	1
Methyl t-butyl ether (MTBE)																					2.6	1	< 1.0	1	0.28	1

Methylene chloride	ug/L				5	5											< 3.0	3	< 3.0	3	< 3.0	3
Naphthalene	ug/L				5	10											< 1.0	1	< 1.0	1	2.6	1
n-Butylbenzene	ug/L					5											< 1.0	1	< 1.0	1	< 1.0	1
n-Propylbenzene	ug/L					5											< 1.0	1	< 1.0	1	< 1.0	1
o-Xylene	ug/L				5	5											< 1.0	1	< 1.0	1	< 1.0	1
p-Isopropyltoluene	ug/L					5											< 1.0	1	< 1.0	1	< 1.0	1
sec-Butylbenzene	ug/L					5											< 1.0	1	< 1.0	1	< 1.0	1
Styrene	ug/L					5											< 1.0	1	< 1.0	1	< 1.0	1
tert-Butylbenzene	ug/L					5											< 1.0	1	< 1.0	1	< 1.0	1
Tetrachloroethene	ug/L				5	5											< 1.0	1	< 1.0	1	< 1.0	1
Tetrahydrofuran (THF)	ug/L					50											< 5.0	5	< 5.0	5	< 5.0	5
Toluene	ug/L				5	5											< 1.0	1	< 1.0	1	< 1.0	1
trans-1,2-Dichloroethene	ug/L				5	5											< 5.0	5	< 5.0	5	< 5.0	5
trans-1,3-Dichloropropene	ug/L					0.4											< 0.40	0.4	< 0.40	0.4	< 0.40	0.4
trans-1,4-dichloro-2-butene	ug/L					5											< 1.0	1	< 1.0	1	< 1.0	1
Trichloroethene	ug/L				5	5											< 1.0	1	< 1.0	1	< 1.0	1
Trichlorofluoromethane	ug/L					5											< 1.0	1	< 1.0	1	< 1.0	1
Trichlorotrifluoroethane	ug/L				5	5											< 1.0	1	< 1.0	1	< 1.0	1
Vinyl chloride	ug/L				2	2											< 1.0	1	< 1.0	1	< 1.0	1
1,1,1,2-Tetrachloroethane	ug/Kg						< 6.6	6.6	< 6.2	6.2	< 6.5	6.5	< 6.2	6.2	< 6.7	6.7						
1,1,1-Trichloroethane	ug/Kg	100,000	100,000	680			< 6.6	6.6	< 6.2	6.2	< 6.5	6.5	< 6.2	6.2	< 6.7	6.7						
1,1,2,2-Tetrachloroethane	ug/Kg						< 6.6	6.6	< 6.2	6.2	< 6.5	6.5	< 6.2	6.2	< 6.7	6.7						
1,1,2-Trichloroethane	ug/Kg						< 6.6	6.6	< 6.2	6.2	< 6.5	6.5	< 6.2	6.2	< 6.7	6.7						
1,1-Dichloroethane	ug/Kg	19,000	26,000	270			< 6.6	6.6	< 6.2	6.2	< 6.5	6.5	< 6.2	6.2	< 6.7	6.7						
1,1-Dichloroethene	ug/Kg	100,000	100,000	330			< 6.6	6.6	< 6.2	6.2	< 6.5	6.5	< 6.2	6.2	< 6.7	6.7						
1,1-Dichloropropene	ug/Kg						< 6.6	6.6	< 6.2	6.2	< 6.5	6.5	< 6.2	6.2	< 6.7	6.7						
1,2,3-Trichlorobenzene	ug/Kg						< 6.6	6.6	< 310	310	< 320	320	< 6.2	6.2	< 330	330						
1,2,3-Trichloropropane	ug/Kg						< 6.6	6.6	< 310	310	< 320	320	< 6.2	6.2	< 330	330						
1,2,4-Trichlorobenzene	ug/Kg						< 6.6	6.6	< 310	310	< 320	320	< 6.2	6.2	< 330	330						
1,2,4-Trimethylbenzene	ug/Kg	47,000	52,000	3,600			< 6.6	6.6	< 310	310	< 320	320	< 6.2	6.2	< 330	330						
1,2-Dibromo-3-chloropropane	ug/Kg						< 6.6	6.6	< 310	310	< 320	320	< 6.2	6.2	< 330	330						
1,2-Dibromoethane	ug/Kg						< 6.6	6.6	< 6.2	6.2	< 6.5	6.5	< 6.2	6.2	< 6.7	6.7						
1,2-Dichlorobenzene	ug/Kg	100,000	100,000	1,100			< 6.6	6.6	< 310	310	< 320	320	< 6.2	6.2	< 330	330						
1,2-Dichloroethane	ug/Kg	2,300	3,100	20			< 6.6	6.6	< 6.2	6.2	< 6.5	6.5	< 6.2	6.2	< 6.7	6.7						
1,2-Dichloropropane	ug/Kg						< 6.6	6.6	< 6.2	6.2	< 6.5	6.5	< 6.2	6.2	< 6.7	6.7						
1,3,5-Trimethylbenzene	ug/Kg	47,000	52,000	8,400			< 6.6	6.6	< 310	310	< 320	320	< 6.2	6.2	< 330	330						
1,3-Dichlorobenzene	ug/Kg	17,000	49,000	2,400			< 6.6	6.6	< 310	310	< 320	320	< 6.2	6.2	< 330	330						
1,3-Dichloropropane	ug/Kg						< 6.6	6.6	< 6.2	6.2	< 6.5	6.5	< 6.2	6.2	< 6.7	6.7						
1,4-Dichlorobenzene	ug/Kg	9,800	13,000	1,800			< 6.6	6.6	< 310	310	< 320	320	< 6.2	6.2	< 330	330						
2,2-Dichloropropane	ug/Kg						< 6.6	6.6	< 6.2	6.2	< 6.5	6.5	< 6.2	6.2	< 6.7	6.7						
2-Chlorotoluene	ug/Kg						< 6.6	6.6	< 310	310	< 320	320	< 6.2	6.2	< 330	330						
2-Hexanone	ug/Kg						< 33	33	< 31	31	< 32	32	< 31	31	< 33	33						
2-Isopropyltoluene	ug/Kg						< 6.6	6.6	< 310	310	< 320	320	< 6.2	6.2	< 330	330						
4-Chlorotoluene	ug/Kg						< 6.6	6.6	< 310	310	< 320	320	< 6.2	6.2	< 330	330						
4-Methyl-2-pentanone	ug/Kg						< 33	33	< 31	31	< 32	32	< 31	31	< 33	33						
Acetone	ug/Kg	100,000	100,000	50			120	66	190	62	110	65	24	62	64	67						
Acrylonitrile	ug/Kg						< 13	13	< 12	12	< 13	13	< 12	12	< 13	13						
Benzene	ug/Kg	2,900	4,800	60			< 6.6	6.6	< 6.2	6.2	< 6.5	6.5	< 6.2	6.2	< 6.7	6.7						
Bromobenzene	ug/Kg						< 6.6	6.6	< 310	310	< 320	320	< 6.2	6.2	< 330	330						
Bromochloromethane	ug/Kg						< 6.6	6.6	< 6.2	6.2	< 6.5	6.5	< 6.2	6.2	< 6.7	6.7						
Bromodichloromethane	ug/Kg						< 6.6	6.6	< 6.2	6.2	< 6.5	6.5	< 6.2	6.2	< 6.7	6.7						
Bromoform	ug/Kg						< 6.6	6.6	< 6.2	6.2	< 6.5	6.5	< 6.2	6.2	< 6.7	6.7						
Bromomethane	ug/Kg						< 6.6	6.6	< 6.2	6.2	< 6.5	6.5	< 6.2	6.2	< 6.7	6.7						
Carbon Disulfide	ug/Kg						1.2	6.6	2.6	6.2	3	6.5	< 6.2	6.2	< 6.7	6.7						
Carbon tetrachloride	ug/Kg	1,400	2,400	760			< 6.6	6.6	< 6.2	6.2	< 6.5	6.5	< 6.2	6.2	< 6.7	6.7						
Chlorobenzene	ug/Kg	100,000	100,000	1,100			< 6.6	6.6	< 6.2	6.2	< 6.5	6.5	< 6.2	6.2	< 6.7	6.7						
Chloroethane	ug/Kg						< 6.6	6.6	< 6.2	6.2	< 6.5	6.5	< 6.2	6.2	< 6.7	6.7						
Chloroform	ug/Kg	10,000	49,000	370			< 6.6	6.6	< 6.2	6.2	< 6.5	6.5	< 6.2	6.2	< 6.7	6.7						
Chloromethane	ug/Kg						< 6.6	6.6	< 6.2	6.2	< 6.5	6.5	< 6.2	6.2	< 6.7	6.7						
cis-1,2-Dichloroethene	ug/Kg	59,000	100,000	250			< 6.6	6.6	< 6.2	6.2	< 6.5	6.5	< 6.2	6.2	< 6.7	6.7						
cis-1,3-Dichloropropene	ug/Kg						< 6.6	6.6	< 6.2	6.2	< 6.5	6.5	< 6.2	6.2	< 6.7	6.7						
Dibromochloromethane	ug/Kg						< 6.6	6.6	< 6.2	6.2	< 6.5	6.5	< 6.2	6.2	< 6.7	6.7						
Dibromomethane	ug/Kg						< 6.6	6.6	< 6.2	6.2	< 6.5	6.5	< 6.2	6.2	< 6.7	6.7						
Dichlorodifluoromethane	ug/Kg						< 6.6	6.6	< 6.2	6.2	< 6.5	6.5	< 6.2	6.2	< 6.7	6.7						
Ethylbenzene	ug/Kg	30,000	41,000	1,000			< 6.6	6.6	< 6.2	6.2	< 6.5	6.5	< 6.2	6.2	< 6.7	6.7						
Hexachlorobutadiene	ug/Kg						< 6.6	6.6	< 310	310	< 320	320	< 6.2	6.2	< 330	330						
Isopropylbenzene	ug/Kg						+++IND	6.6	< 310	310	< 320	320	< 6.2	6.2	< 330	330						
m&p-Xylene	ug/Kg						< 6.6	6.6	< 6.2	6.2	< 6.5	6.5	< 6.2	6.2	< 6.7	6.7						
Methyl Ethyl Ketone	ug/Kg	100,000	100,000	120			30	39	47	37	< 39	39	< 37	37	16	40						
Methyl t-butyl ether (MTBE)	ug/Kg	62,000	100,000	930			< 13	13	< 12	12	< 13	13	< 12	12	< 13	13						
Methylene chloride	ug/Kg	51,000	100,000	50			1.5	6.6	1.7	6.2	< 6.5	6.5	1.3	6.2	1.8	6.7						
Naphthalene	ug/Kg						< 6.6	6.6	< 310	310	< 320	320	< 6.2	6.2	< 330	330						
n-Butylbenzene	ug/Kg	100,000	100,000	12,000			< 6.6	6.6	< 310	310	< 320	320	< 6.2	6.2	< 330	330						
n-Propylbenzene	ug/Kg	100,000	100,000	3,900			< 6.6	6.6	< 310	310	< 320	320	< 6.2	6.2	< 330	330						
o-Xylene	ug/Kg						< 6.6	6.6	< 6.2	6.2	< 6.5	6.5	< 6.2	6.2	< 6.7	6.7						
p-Isopropyltoluene	ug/Kg						< 6.6	6.6	< 310	310	< 320	320	< 6.2	6.2	< 330	330						
sec-Butylbenzene	ug/Kg	100,000	100,000	11,000			< 6.6	6.6	< 310	310	< 320	320	< 6.2	6.2	< 330	330						
Styrene	ug/Kg						< 6.6	6.6	< 6.2	6.2	< 6.5	6.5	< 6.2	6.2	< 6.7	6.7						
tert-Butylbenzene	ug/Kg	100,000	100,000	5,900			< 6.6	6.6	< 310	310	< 320	320	< 6.2	6.2	< 330	330						
Tetrachloroethene	ug/Kg	5,500	19,000	1,300			< 6.6	6.6	< 6.2	6.2	< 6.5	6.5	< 6.2	6.2	< 6.7	6.7						
Tetrahydrofuran (THF)	ug/Kg						< 13	13	< 12	12	< 13	13	< 12	12	< 13	13						
Toluene	ug/Kg	100,000	100,000	700			< 6.6	6.6	< 6.2	6.2	1.5	6.5	< 6.2	6.2	< 6.7	6.7						
trans-1,2-Dichloroethene	ug/Kg	100,000	100,000	190			< 6.6	6.6	< 6.2	6.2	< 6.5	6.5	< 6.2	6.2	< 6.7	6.7						
trans-1,3-Dichloropropene	ug/Kg						< 6.6	6.6	< 6.2	6.2	< 6.5	6.5	< 6.2	6.2	< 6.7	6.7						
trans-1,4-dichloro-2-butene	ug/Kg						< 13	13	< 620	620	< 650	650	< 12	12	< 670	670						
Trichloroethene	ug/Kg	10,000	21,000	470			< 6.6	6.6	< 6.2	6.2	< 6.5	6.5	< 6.2	6.2	< 6.7	6.7						
Trichlorofluoromethane	ug/Kg						< 6.6	6.6	< 6.2	6.2	< 6.5	6.5	< 6.2	6.2	< 6.7	6.7						
Trichlorotrifluoroethane	ug/Kg						< 6.6	6.6	< 6.2	6.2	< 6.5	6.5	< 6.2	6.2	< 6.7	6.7						
Vinyl chloride	ug/Kg	210	900	20			< 6.6	6.6	< 6.2	6.2	< 6.5	6.5	< 6.2	6.2	< 6.7	6.7						
Semivolatiles By SW 8270																						
1,2,4,5-Tetrachlorobenzene	ug/Kg						< 300	300	< 290	290	< 300	300	< 280	280	< 300	300						
1,2,4-Trichlorobenzene	ug/Kg						< 300	300	< 290	290	< 300	300	< 280	280	< 300	300						
1,2-Dichlorobenzene	ug/Kg						< 300	300	< 290	290	< 300	300	< 280	280	< 300	300						
1,2-Diphenylhydrazine	ug/Kg						< 300	300	< 290	290	< 300	300	< 280	280	< 300	300						
1,3-Dichlorobenzene	ug/Kg						< 300	300	< 290	290	< 300	300	< 280	280	< 300	300						
1,4-Dichlorobenzene	ug/Kg						< 300	300	< 290	290	< 300	300	< 280	280	< 300	300						
2,4,5-Trichlorophenol	ug/Kg						< 300	300	< 290	290	< 300	300	< 280	280	< 300	300						
2,4,6-Trichlorophenol	ug/Kg						< 300	300	< 290	290	< 300	300	< 280	280	< 300	300						
2,4-Dichlorophenol	ug/Kg						< 300	300	< 290	290	< 300	300	< 280	280	< 300	300						
2,4-Dimethylphenol	ug/Kg						< 300	300	< 290	290	< 300	300	< 280	280	< 300	300						
2,4-Dinitrophenol	ug/Kg						< 2200	2,200	< 2100	2,100	< 2100	2,100	< 2000	2,000	< 2200	2,200						
2,4-Dinitrotoluene	ug/Kg						< 300	300	< 290	290	< 300	300	< 280	280	< 300	300						
2,6-Dinitrotoluene	ug/Kg						< 300	300	< 290	290	< 300	300	< 280	280	< 300	300						
2-Chloronaphthalene	ug/Kg						< 300	300	< 290	290	< 300	300	< 280	280	< 300	300						

2-Chlorophenol	ug/Kg							< 300	300		< 290	290		< 300	300		< 280	280		< 300	300								
2-Methylnaphthalene	ug/Kg							< 300	300		< 290	290		< 300	300		< 280	280		< 300	300								
2-Methylphenol (o-cresol)	ug/Kg	100,000	100,000	330				< 300	300		< 290	290		< 300	300		< 280	280		< 300	300								
2-Nitroaniline	ug/Kg							< 2200	2,200		< 2100	2,100		< 2100	2,100		< 2000	2,000		< 2200	2,200								
2-Nitrophenol	ug/Kg							< 300	300		< 290	290		< 300	300		< 280	280		< 300	300								
3&4-Methylphenol (m&p-cresol)	ug/Kg							< 300	300		< 290	290		< 300	300		< 280	280		< 300	300								
3,3'-Dichlorobenzidine	ug/Kg							< 870	870		< 820	820		< 840	840		< 800	800		< 860	860								
3-Nitroaniline	ug/Kg							< 2200	2,200		< 2100	2,100		< 2100	2,100		< 2000	2,000		< 2200	2,200								
4,6-Dinitro-2-methylphenol	ug/Kg							< 2200	2,200		< 2100	2,100		< 2100	2,100		< 2000	2,000		< 2200	2,200								
4-Bromophenyl phenyl ether	ug/Kg							< 300	300		< 290	290		< 300	300		< 280	280		< 300	300								
4-Chloro-3-methylphenol	ug/Kg							< 300	300		< 290	290		< 300	300		< 280	280		< 300	300								
4-Chloroaniline	ug/Kg							< 870	870		< 820	820		< 840	840		< 800	800		< 860	860								
4-Chlorophenyl phenyl ether	ug/Kg							< 300	300		< 290	290		< 300	300		< 280	280		< 300	300								
4-Nitroaniline	ug/Kg							< 2200	2,200		< 2100	2,100		< 2100	2,100		< 2000	2,000		< 2200	2,200								
4-Nitrophenol	ug/Kg							< 2200	2,200		< 2100	2,100		< 2100	2,100		< 2000	2,000		< 2200	2,200								
Acenaphthene	ug/Kg	100,000	100,000	20,000				< 300	300		< 290	290		< 300	300		< 280	280		160	300								
Acenaphthylene	ug/Kg	100,000	100,000	100,000				< 300	300		< 290	290		< 300	300		< 280	280		< 300	300								
Acetophenone	ug/Kg							< 300	300		< 290	290		< 300	300		< 280	280		< 300	300								
Aniline	ug/Kg							< 2200	2,200		< 2100	2,100		< 2100	2,100		< 2000	2,000		< 2200	2,200								
Anthracene	ug/Kg	100,000	100,000	100,000				< 300	300		< 290	290		< 300	300		< 280	280		150	300								
Benz(a)anthracene	ug/Kg	1,000	1,000	1,000				< 300	300		200	290		< 300	300		< 280	280		220	300								
Benzidine	ug/Kg							< 870	870		< 820	820		< 840	840		< 800	800		< 860	860								
Benzo(a)pyrene	ug/Kg	1,000	1,000	1,000				< 300	300		170	290		< 300	300		< 280	280		190	300								
Benzo(b)fluoranthene	ug/Kg	1,000	1,000	1,000				< 300	300		210	290		< 300	300		< 280	280		220	300								
Benzo(ghi)perylene	ug/Kg	100,000	100,000	100,000				< 300	300		< 290	290		< 300	300		< 280	280		< 300	300								
Benzo(k)fluoranthene	ug/Kg	1,000	3,900	800				< 300	300		< 290	290		< 300	300		< 280	280		< 300	300								
Benzoic acid	ug/Kg							< 2200	2,200		< 2100	2,100		< 2100	2,100		< 2000	2,000		< 2200	2,200								
Benzyl butyl phthalate	ug/Kg							< 300	300		< 290	290		< 300	300		< 280	280		< 300	300								
Bis(2-chloroethoxy)methane	ug/Kg							< 300	300		< 290	290		< 300	300		< 280	280		< 300	300								
Bis(2-chloroethyl)ether	ug/Kg							< 300	300		< 290	290		< 300	300		< 280	280		< 300	300								
Bis(2-chloroisopropyl)ether	ug/Kg							< 300	300		< 290	290		< 300	300		< 280	280		< 300	300								
Bis(2-ethylhexyl)phthalate	ug/Kg							< 300	300		< 290	290		< 300	300		< 280	280		< 300	300								
Carbazole	ug/Kg							< 2200	2,200		< 2100	2,100		< 2100	2,100		< 2000	2,000		< 2200	2,200								
Chrysene	ug/Kg	1,000	3,900	1,000				< 300	300		210	290		< 300	300		< 280	280		210	300								
Dibenz(a,h)anthracene	ug/Kg	330	330	330				< 300	300		< 290	290		< 300	300		< 280	280		< 300	300								
Dibenzofuran	ug/Kg			7,000				< 300	300		< 290	290		< 300	300		< 280	280		130	300								
Diethyl phthalate	ug/Kg							< 300	300		< 290	290		< 300	300		< 280	280		< 300	300								
Dimethylphthalate	ug/Kg							< 300	300		< 290	290		< 300	300		< 280	280		< 300	300								
Di-n-butylphthalate	ug/Kg							< 300	300		< 290	290		< 300	300		< 280	280		< 300	300								
Di-n-octylphthalate	ug/Kg							< 300	300		< 290	290		< 300	300		< 280	280		< 300	300								
Fluoranthene	ug/Kg	100,000	100,000	100,000				< 300	300		440	290		140	300		< 280	280		630	300								
Fluorene	ug/Kg	100,000	100,000	30,000				< 300	300		< 290	290		< 300	300		< 280	280		160	300								
Hexachlorobenzene	ug/Kg							< 300	300		< 290	290		< 300	300		< 280	280		< 300	300								
Hexachlorobutadiene	ug/Kg							< 300	300		< 290	290		< 300	300		< 280	280		< 300	300								
Hexachlorocyclopentadiene	ug/Kg							< 300	300		< 290	290		< 300	300		< 280	280		< 300	300								
Hexachloroethane	ug/Kg							< 300	300		< 290	290		< 300	300		< 280	280		< 300	300								
Indeno(1,2,3-cd)pyrene	ug/Kg	500	500	500				< 300	300		< 290	290		< 300	300		< 280	280		< 300	300								
Isophorone	ug/Kg							< 300	300		< 290	290		< 300	300		< 280	280		< 300	300								
Naphthalene	ug/Kg	100,000	100,000	12,000				< 300	300		< 290	290		< 300	300		< 280	280		< 300	300								
Nitrobenzene	ug/Kg							< 300	300		< 290	290		< 300	300		< 280	280		< 300	300								
N-Nitrosodimethylamine	ug/Kg							< 300	300		< 290	290		< 300	300		< 280	280		< 300	300								
N-Nitrosodi-n-propylamine	ug/Kg							< 300	300		< 290	290		< 300	300		< 280	280		< 300	300								
N-Nitrosodiphenylamine	ug/Kg							< 300	300		< 290	290		< 300	300		< 280	280		< 300	300								
Pentachloronitrobenzene	ug/Kg							< 300	300		< 290	290		< 300	300		< 280	280		< 300	300								
Pentachlorophenol	ug/Kg	2,400	6,700	800				< 300	300		< 290	290		< 300	300		< 280	280		< 300	300								
Phenanthrene	ug/Kg	100,000	100,000	100,000				< 300	300		350	290		< 300	300		< 280	280		920	300								
Phenol	ug/Kg	100,000	100,000	330				< 300	300		< 290	290		< 300	300		< 280	280		< 300	300								
Pyrene	ug/Kg	100,000	100,000	100,000				< 300	300		400	290		< 300	300		< 280	280		580	300								
Pyridine	ug/Kg							< 300	300		< 290	290		< 300	300		< 280	280		< 300	300								

Result Detected

RL Exceeds Criteria

Result Exceeds Criteria

APPENDIX A
Laboratory Reports

Environmental Laboratories, Inc.
587 East Middle Turnpike, P.O.Box 370, Manchester, CT 06045
Tel. (860) 645-1102 Fax (860) 645-0823

NY # 11301

SDG Comments

August 04, 2014

SDG I.D.: GBG85525

8260 Volatile Organics:
1,2-Dibromoethane, 1,2,3 Trichloropropane, and 1,2-Dibromo-3-chloropropane do not meet NY TOGS GA criteria, these compounds are analyzed by GC/FID method 504 or 8011 to achieve this criteria.

Please be advised that the NY unrestricted soil criteria for chromium is based on hexavalent chromium and trivalent chromium.

BG85526 - Client provided soil jar for volatile analysis. Phoenix prepared sample per method 5035.

BG85528 - Client provided soil jar for volatile analysis. Phoenix prepared sample per method 5035.

BG85530 - Client provided soil jar for volatile analysis. Phoenix prepared sample per method 5035.

BG85532 - Client provided soil jar for volatile analysis. Phoenix prepared sample per method 5035.

BG85534 - Client provided soil jar for volatile analysis. Phoenix prepared sample per method 5035.

BG85535 - The pH in the preserved vial was greater than 2.

Environmental Laboratories, Inc.
587 East Middle Turnpike, P.O.Box 370, Manchester, CT 06045
Tel. (860) 645-1102 Fax (860) 645-0823

NY # 11301

Draft Progress Report

August 04, 2014

FOR: Attn: Mr. Charles B. Sosik, P.G.
Environmental Business Consultants
1808 Middle Country Rd
Ridge NY 11961-2406

Sample Information		Custody Information		Date	Time
Matrix:	SOIL	Collected by:		07/29/14	7:20
Location Code:	EBC	Received by:	LB	07/31/14	16:10
Rush Request:	72 Hour	Analyzed by:	see "By" below		
P.O.#:					

Laboratory Data

SDG ID: GBG85525
Phoenix ID: BG85525

Project ID: 526 UNION AVE., BROOKLYN
Client ID: B1 0-2

Parameter	Result	RL/ PQL	Units	Date/Time	By	Reference	
Silver	< 0.33	0.33	mg/Kg	08/03/14	LK	SW6010	
Aluminum	7360	33	mg/Kg	08/02/14	LK	SW6010	
Arsenic	2.6	0.7	mg/Kg	08/03/14	LK	SW6010	
Barium	56.0	0.7	mg/Kg	08/03/14	LK	SW6010	
Beryllium	0.47	0.26	mg/Kg	08/03/14	LK	SW6010	
Calcium	1520	3.3	mg/Kg	08/03/14	LK	SW6010	
Cadmium	0.70	0.33	mg/Kg	08/03/14	LK	SW6010	
Cobalt	8.04	0.33	mg/Kg	08/03/14	LK	SW6010	
Chromium	21.1	0.33	mg/Kg	08/03/14	LK	SW6010	
Copper	33.1	0.33	mg/kg	08/03/14	LK	SW6010	
Iron	19500	33	mg/Kg	08/02/14	LK	SW6010	
Mercury	0.27	0.07	mg/Kg	08/01/14	MA	SW-7471	
Potassium	1320	7	mg/Kg	08/03/14	LK	SW6010	
Magnesium	2320	3.3	mg/Kg	08/03/14	LK	SW6010	
Manganese	232	3.3	mg/Kg	08/02/14	LK	SW6010	
Sodium	101	7	mg/Kg	08/03/14	LK	SW6010	
Nickel	14.4	0.33	mg/Kg	08/03/14	LK	SW6010	
Lead	108	0.7	mg/Kg	08/03/14	LK	SW6010	
Antimony	< 1.6	1.6	mg/Kg	08/03/14	LK	SW6010	
Selenium	< 1.3	1.3	mg/Kg	08/03/14	LK	SW6010	
TCLP Silver	< 0.10	0.10	mg/L	08/03/14	LK	SW6010	
TCLP Arsenic	< 0.10	0.10	mg/L	08/03/14	LK	SW6010	
TCLP Barium	< 0.10	0.10	mg/L	08/03/14	LK	SW6010	B
TCLP Cadmium	< 0.050	0.050	mg/L	08/03/14	LK	SW6010	
TCLP Chromium	1.25	0.10	mg/L	08/03/14	LK	SW6010	
TCLP Mercury	< 0.0002	0.0002	mg/L	08/01/14	MA	SW7470	
TCLP Lead	< 0.10	0.10	mg/L	08/03/14	LK	SW6010	
TCLP Selenium	< 0.10	0.10	mg/L	08/03/14	LK	SW6010	

Project ID: 526 UNION AVE., BROOKLYN
Client ID: B1 0-2

Phoenix I.D.: BG85525

Parameter	Result	RL/ PQL	Units	Date/Time	By	Reference
Thallium	< 1.3	1.3	mg/Kg	08/03/14	LK	SW6010
TCLP Metals Digestion	Completed			08/01/14	I/I	SW3005
Vanadium	28.8	0.3	mg/Kg	08/03/14	LK	SW6010
Zinc	75.8	0.7	mg/Kg	08/03/14	LK	SW6010
Percent Solid	94		%	07/31/14	I	E160.3
Mercury Digestion	Completed			08/01/14	I/I	SW7471
TCLP Digestion Mercury	Completed			08/01/14	I/I	E1311/7470
TCLP Extraction for Metals	Completed			07/31/14	I	EPA 1311
Total Metals Digest	Completed			07/31/14	CB/AG	SW846 - 3050

B = Present in blank, no bias suspected.

RL/PQL=Reporting/Practical Quantitation Level (Equivalent to NELAC LOQ, Limit of Quanitation) ND=Not Detected
BRL=Below Reporting Level

Comments:

Please be advised that the NY unrestricted soil criteria for chromium is based on hexavalent chromium and trivalent chromium.

All soils, solids and sludges are reported on a dry weight basis unless otherwise noted in the sample comments.

If there are any questions regarding this data, please call Phoenix Client Services at extension 200.
This report must not be reproduced except in full as defined by the attached chain of custody.

PLEASE NOTE: THIS PROGRESS REPORT IS CONSIDERED PRELIMINARY DATA. THE RESULTS ENTERED HAVE NOT BEEN EXAMINED BY OUR QA/QC DEPARTMENT.

Phyllis Shiller, Laboratory Director
August 04, 2014

PHOENIX

Environmental Laboratories, Inc.
587 East Middle Turnpike, P.O.Box 370, Manchester, CT 06045
Tel. (860) 645-1102 Fax (860) 645-0823

ACCREDITED IN ACCORDANCE WITH nelac NY # 11301

Draft Progress Report

August 04, 2014

FOR: Attn: Mr. Charles B. Sosik, P.G.
Environmental Business Consultants
1808 Middle Country Rd
Ridge NY 11961-2406

Sample Information		Custody Information		Date	Time
Matrix:	SOIL	Collected by:		07/29/14	7:40
Location Code:	EBC	Received by:	LB	07/31/14	16:10
Rush Request:	72 Hour	Analyzed by:	see "By" below		
P.O.#:					

Laboratory Data

SDG ID: GBG85525
Phoenix ID: BG85526

Project ID: 526 UNION AVE., BROOKLYN
Client ID: B1 8-10

Parameter	Result	RL/ PQL	LOD/ MDL	Units	Date/Time	By	Reference	
Percent Solid	76			%	07/31/14	I	E160.3	
Soil Extraction for SVOA	Completed				07/31/14	JJ/HF	SW3545	
Volatiles								
Volatiles	Pending			ug/Kg	08/01/14	JLI	SW8260	
Semivolatiles								
1,2,4,5-Tetrachlorobenzene	ND	300	150	ug/Kg	08/01/14	DD	SW 8270	
1,2,4-Trichlorobenzene	ND	300	130	ug/Kg	08/01/14	DD	SW 8270	
1,2-Dichlorobenzene	ND	300	120	ug/Kg	08/01/14	DD	SW 8270	
1,2-Diphenylhydrazine	ND	300	140	ug/Kg	08/01/14	DD	SW 8270	
1,3-Dichlorobenzene	ND	300	130	ug/Kg	08/01/14	DD	SW 8270	
1,4-Dichlorobenzene	ND	300	130	ug/Kg	08/01/14	DD	SW 8270	
2,4,5-Trichlorophenol	ND	300	240	ug/Kg	08/01/14	DD	SW 8270	
2,4,6-Trichlorophenol	ND	300	140	ug/Kg	08/01/14	DD	SW 8270	
2,4-Dichlorophenol	ND	300	150	ug/Kg	08/01/14	DD	SW 8270	
2,4-Dimethylphenol	ND	300	110	ug/Kg	08/01/14	DD	SW 8270	
2,4-Dinitrophenol	ND	2200	300	ug/Kg	08/01/14	DD	SW 8270	
2,4-Dinitrotoluene	ND	300	170	ug/Kg	08/01/14	DD	SW 8270	
2,6-Dinitrotoluene	ND	300	140	ug/Kg	08/01/14	DD	SW 8270	
2-Chloronaphthalene	ND	300	120	ug/Kg	08/01/14	DD	SW 8270	
2-Chlorophenol	ND	300	120	ug/Kg	08/01/14	DD	SW 8270	
2-Methylnaphthalene	ND	300	130	ug/Kg	08/01/14	DD	SW 8270	
2-Methylphenol (o-cresol)	ND	300	200	ug/Kg	08/01/14	DD	SW 8270	
2-Nitroaniline	ND	2200	440	ug/Kg	08/01/14	DD	SW 8270	
2-Nitrophenol	ND	300	280	ug/Kg	08/01/14	DD	SW 8270	
3&4-Methylphenol (m&p-cresol)	ND	300	170	ug/Kg	08/01/14	DD	SW 8270	1
3,3'-Dichlorobenzidine	ND	870	210	ug/Kg	08/01/14	DD	SW 8270	

Project ID: 526 UNION AVE., BROOKLYN
Client ID: B1 8-10

Phoenix I.D.: BG85526

Parameter	Result	RL/ PQL	LOD/ MDL	Units	Date/Time	By	Reference	
3-Nitroaniline	ND	2200	950	ug/Kg	08/01/14	DD	SW 8270	
4,6-Dinitro-2-methylphenol	ND	2200	470	ug/Kg	08/01/14	DD	SW 8270	
4-Bromophenyl phenyl ether	ND	300	130	ug/Kg	08/01/14	DD	SW 8270	
4-Chloro-3-methylphenol	ND	300	150	ug/Kg	08/01/14	DD	SW 8270	
4-Chloroaniline	ND	870	200	ug/Kg	08/01/14	DD	SW 8270	
4-Chlorophenyl phenyl ether	ND	300	150	ug/Kg	08/01/14	DD	SW 8270	
4-Nitroaniline	ND	2200	150	ug/Kg	08/01/14	DD	SW 8270	
4-Nitrophenol	ND	2200	200	ug/Kg	08/01/14	DD	SW 8270	
Acenaphthene	ND	300	130	ug/Kg	08/01/14	DD	SW 8270	
Acenaphthylene	ND	300	120	ug/Kg	08/01/14	DD	SW 8270	
Acetophenone	ND	300	140	ug/Kg	08/01/14	DD	SW 8270	
Aniline	ND	2200	880	ug/Kg	08/01/14	DD	SW 8270	
Anthracene	ND	300	140	ug/Kg	08/01/14	DD	SW 8270	
Benz(a)anthracene	ND	300	150	ug/Kg	08/01/14	DD	SW 8270	
Benzidine	ND	870	260	ug/Kg	08/01/14	DD	SW 8270	
Benzo(a)pyrene	ND	300	140	ug/Kg	08/01/14	DD	SW 8270	
Benzo(b)fluoranthene	ND	300	150	ug/Kg	08/01/14	DD	SW 8270	
Benzo(ghi)perylene	ND	300	140	ug/Kg	08/01/14	DD	SW 8270	
Benzo(k)fluoranthene	ND	300	140	ug/Kg	08/01/14	DD	SW 8270	
Benzoic acid	ND	2200	870	ug/Kg	08/01/14	DD	SW 8270	1
Benzyl butyl phthalate	ND	300	110	ug/Kg	08/01/14	DD	SW 8270	
Bis(2-chloroethoxy)methane	ND	300	120	ug/Kg	08/01/14	DD	SW 8270	
Bis(2-chloroethyl)ether	ND	300	120	ug/Kg	08/01/14	DD	SW 8270	
Bis(2-chloroisopropyl)ether	ND	300	120	ug/Kg	08/01/14	DD	SW 8270	1
Bis(2-ethylhexyl)phthalate	ND	300	130	ug/Kg	08/01/14	DD	SW 8270	
Carbazole	ND	2200	330	ug/Kg	08/01/14	DD	SW 8270	
Chrysene	ND	300	150	ug/Kg	08/01/14	DD	SW 8270	
Dibenz(a,h)anthracene	ND	300	140	ug/Kg	08/01/14	DD	SW 8270	
Dibenzofuran	ND	300	130	ug/Kg	08/01/14	DD	SW 8270	
Diethyl phthalate	ND	300	140	ug/Kg	08/01/14	DD	SW 8270	
Dimethylphthalate	ND	300	130	ug/Kg	08/01/14	DD	SW 8270	
Di-n-butylphthalate	ND	300	120	ug/Kg	08/01/14	DD	SW 8270	
Di-n-octylphthalate	ND	300	110	ug/Kg	08/01/14	DD	SW 8270	
Fluoranthene	ND	300	140	ug/Kg	08/01/14	DD	SW 8270	
Fluorene	ND	300	140	ug/Kg	08/01/14	DD	SW 8270	
Hexachlorobenzene	ND	300	130	ug/Kg	08/01/14	DD	SW 8270	
Hexachlorobutadiene	ND	300	160	ug/Kg	08/01/14	DD	SW 8270	
Hexachlorocyclopentadiene	ND	300	130	ug/Kg	08/01/14	DD	SW 8270	
Hexachloroethane	ND	300	130	ug/Kg	08/01/14	DD	SW 8270	
Indeno(1,2,3-cd)pyrene	ND	300	140	ug/Kg	08/01/14	DD	SW 8270	
Isophorone	ND	300	120	ug/Kg	08/01/14	DD	SW 8270	
Naphthalene	ND	300	130	ug/Kg	08/01/14	DD	SW 8270	
Nitrobenzene	ND	300	150	ug/Kg	08/01/14	DD	SW 8270	
N-Nitrosodimethylamine	ND	300	120	ug/Kg	08/01/14	DD	SW 8270	
N-Nitrosodi-n-propylamine	ND	300	140	ug/Kg	08/01/14	DD	SW 8270	
N-Nitrosodiphenylamine	ND	300	170	ug/Kg	08/01/14	DD	SW 8270	
Pentachloronitrobenzene	ND	300	160	ug/Kg	08/01/14	DD	SW 8270	
Pentachlorophenol	ND	300	160	ug/Kg	08/01/14	DD	SW 8270	
Phenanthrene	ND	300	120	ug/Kg	08/01/14	DD	SW 8270	

Project ID: 526 UNION AVE., BROOKLYN
Client ID: B1 8-10

Phoenix I.D.: BG85526

Parameter	Result	RL/ PQL	LOD/ MDL	Units	Date/Time	By	Reference
Phenol	ND	300	140	ug/Kg	08/01/14	DD	SW 8270
Pyrene	ND	300	150	ug/Kg	08/01/14	DD	SW 8270
Pyridine	ND	300	110	ug/Kg	08/01/14	DD	SW 8270
QA/QC Surrogates							
% 2,4,6-Tribromophenol	83			%	08/01/14	DD	30 - 130 %
% 2-Fluorobiphenyl	65			%	08/01/14	DD	30 - 130 %
% 2-Fluorophenol	69			%	08/01/14	DD	30 - 130 %
% Nitrobenzene-d5	67			%	08/01/14	DD	30 - 130 %
% Phenol-d5	74			%	08/01/14	DD	30 - 130 %
% Terphenyl-d14	89			%	08/01/14	DD	30 - 130 %

1 = This parameter is not certified by NY NELAC for this matrix. NY NELAC does not offer certification for all parameters at this time.

RL/PQL=Reporting/Practical Quantitation Level (Equivalent to NELAC LOQ, Limit of Quanitation) ND=Not Detected
BRL=Below Reporting Level LOD=Limit of Detection MDL=Method Detection Limit

Comments:

Per 1.4.6 of EPA method 8270D, 1,2-Diphenylhydrazine is unstable and readily converts to Azobenzene. Azobenzene is used for the calibration of 1,2-Diphenylhydrazine.

This sample was not collected in accordance with EPA method 5035. NELAC requires the laboratory to qualify the volatile soil data as biased low.

All soils, solids and sludges are reported on a dry weight basis unless otherwise noted in the sample comments.

If there are any questions regarding this data, please call Phoenix Client Services at extension 200.
This report must not be reproduced except in full as defined by the attached chain of custody.

PLEASE NOTE: THIS PROGRESS REPORT IS CONSIDERED PRELIMINARY DATA. THE RESULTS ENTERED HAVE NOT BEEN EXAMINED BY OUR QA/QC DEPARTMENT.

Phyllis Shiller, Laboratory Director
August 04, 2014

PHOENIX

Environmental Laboratories, Inc.
587 East Middle Turnpike, P.O.Box 370, Manchester, CT 06045
Tel. (860) 645-1102 Fax (860) 645-0823

ACCREDITED IN ACCORDANCE WITH nelac NY # 11301

Draft Progress Report

August 04, 2014

FOR: Attn: Mr. Charles B. Sosik, P.G.
Environmental Business Consultants
1808 Middle Country Rd
Ridge NY 11961-2406

Sample Information		Custody Information		Date	Time
Matrix:	SOIL	Collected by:		07/29/14	8:00
Location Code:	EBC	Received by:	LB	07/31/14	16:10
Rush Request:	72 Hour	Analyzed by:	see "By" below		
P.O.#:					

Laboratory Data

SDG ID: GBG85525
Phoenix ID: BG85527

Project ID: 526 UNION AVE., BROOKLYN
Client ID: B2 3-5

Parameter	Result	RL/ PQL	Units	Date/Time	By	Reference	
Silver	< 0.33	0.33	mg/Kg	08/03/14	LK	SW6010	
Aluminum	5040	33	mg/Kg	08/02/14	LK	SW6010	
Arsenic	4.3	0.7	mg/Kg	08/03/14	LK	SW6010	
Barium	76.6	0.7	mg/Kg	08/03/14	LK	SW6010	
Beryllium	0.38	0.26	mg/Kg	08/03/14	LK	SW6010	
Calcium	2100	3.3	mg/Kg	08/03/14	LK	SW6010	
Cadmium	0.60	0.33	mg/Kg	08/03/14	LK	SW6010	
Cobalt	4.82	0.33	mg/Kg	08/03/14	LK	SW6010	
Chromium	23.9	0.33	mg/Kg	08/03/14	LK	SW6010	
Copper	12.0	0.33	mg/kg	08/03/14	LK	SW6010	
Iron	13900	33	mg/Kg	08/02/14	LK	SW6010	
Mercury	0.53	0.06	mg/Kg	08/01/14	MA	SW-7471	
Potassium	1460	7	mg/Kg	08/03/14	LK	SW6010	
Magnesium	1050	3.3	mg/Kg	08/03/14	LK	SW6010	
Manganese	127	3.3	mg/Kg	08/02/14	LK	SW6010	
Sodium	109	7	mg/Kg	08/03/14	LK	SW6010	
Nickel	15.5	0.33	mg/Kg	08/03/14	LK	SW6010	
Lead	166	6.6	mg/Kg	08/02/14	LK	SW6010	
Antimony	< 1.7	1.7	mg/Kg	08/03/14	LK	SW6010	
Selenium	< 1.3	1.3	mg/Kg	08/03/14	LK	SW6010	
TCLP Silver	< 0.10	0.10	mg/L	08/03/14	LK	SW6010	
TCLP Arsenic	< 0.10	0.10	mg/L	08/03/14	LK	SW6010	
TCLP Barium	0.30	0.10	mg/L	08/03/14	LK	SW6010	B
TCLP Cadmium	< 0.050	0.050	mg/L	08/03/14	LK	SW6010	
TCLP Chromium	< 0.10	0.10	mg/L	08/03/14	LK	SW6010	
TCLP Mercury	< 0.0002	0.0002	mg/L	08/01/14	MA	SW7470	
TCLP Lead	0.17	0.10	mg/L	08/03/14	LK	SW6010	
TCLP Selenium	< 0.10	0.10	mg/L	08/03/14	LK	SW6010	

Project ID: 526 UNION AVE., BROOKLYN
Client ID: B2 3-5

Phoenix I.D.: BG85527

Parameter	Result	RL/ PQL	Units	Date/Time	By	Reference
Thallium	< 1.3	1.3	mg/Kg	08/03/14	LK	SW6010
TCLP Metals Digestion	Completed			08/01/14	I/I	SW3005
Vanadium	17.8	0.3	mg/Kg	08/03/14	LK	SW6010
Zinc	417	6.6	mg/Kg	08/02/14	LK	SW6010
Percent Solid	89		%	07/31/14	I	E160.3
Mercury Digestion	Completed			08/01/14	I/I	SW7471
TCLP Digestion Mercury	Completed			08/01/14	I/I	E1311/7470
TCLP Extraction for Metals	Completed			07/31/14	I	EPA 1311
Total Metals Digest	Completed			07/31/14	CB/AG	SW846 - 3050

B = Present in blank, no bias suspected.

RL/PQL=Reporting/Practical Quantitation Level (Equivalent to NELAC LOQ, Limit of Quanitation) ND=Not Detected
BRL=Below Reporting Level

Comments:

Please be advised that the NY unrestricted soil criteria for chromium is based on hexavalent chromium and trivalent chromium.

All soils, solids and sludges are reported on a dry weight basis unless otherwise noted in the sample comments.

If there are any questions regarding this data, please call Phoenix Client Services at extension 200.
This report must not be reproduced except in full as defined by the attached chain of custody.

PLEASE NOTE: THIS PROGRESS REPORT IS CONSIDERED PRELIMINARY DATA. THE RESULTS ENTERED HAVE NOT BEEN EXAMINED BY OUR QA/QC DEPARTMENT.

Phyllis Shiller, Laboratory Director
August 04, 2014

Environmental Laboratories, Inc.
587 East Middle Turnpike, P.O.Box 370, Manchester, CT 06045
Tel. (860) 645-1102 Fax (860) 645-0823

NY # 11301

Draft Progress Report

August 04, 2014

FOR: Attn: Mr. Charles B. Sosik, P.G.
Environmental Business Consultants
1808 Middle Country Rd
Ridge NY 11961-2406

Sample Information		Custody Information		Date	Time
Matrix:	SOIL	Collected by:		07/29/14	8:20
Location Code:	EBC	Received by:	LB	07/31/14	16:10
Rush Request:	72 Hour	Analyzed by:	see "By" below		
P.O.#:					

Laboratory Data

SDG ID: GBG85525
Phoenix ID: BG85528

Project ID: 526 UNION AVE., BROOKLYN
Client ID: B2 8-10

Parameter	Result	RL/ PQL	LOD/ MDL	Units	Date/Time	By	Reference	
Percent Solid	81			%	07/31/14	I	E160.3	
Soil Extraction for SVOA	Completed				07/31/14	JJ/HF	SW3545	
Volatiles								
1,1,1,2-Tetrachloroethane	ND	6.2	1.0	ug/Kg	08/01/14	JLI	SW8260	
1,1,1-Trichloroethane	ND	6.2	1.2	ug/Kg	08/01/14	JLI	SW8260	
1,1,2,2-Tetrachloroethane	ND	6.2	0.88	ug/Kg	08/01/14	JLI	SW8260	
1,1,2-Trichloroethane	ND	6.2	0.60	ug/Kg	08/01/14	JLI	SW8260	
1,1-Dichloroethane	ND	6.2	1.2	ug/Kg	08/01/14	JLI	SW8260	
1,1-Dichloroethene	ND	6.2	1.3	ug/Kg	08/01/14	JLI	SW8260	
1,1-Dichloropropene	ND	6.2	1.2	ug/Kg	08/01/14	JLI	SW8260	
1,2,3-Trichlorobenzene	ND	310	62	ug/Kg	08/02/14	JLI	SW8260	
1,2,3-Trichloropropane	ND	310	44	ug/Kg	08/02/14	JLI	SW8260	
1,2,4-Trichlorobenzene	ND	310	62	ug/Kg	08/02/14	JLI	SW8260	
1,2,4-Trimethylbenzene	ND	310	44	ug/Kg	08/02/14	JLI	SW8260	
1,2-Dibromo-3-chloropropane	ND	310	83	ug/Kg	08/02/14	JLI	SW8260	
1,2-Dibromoethane	ND	6.2	1.6	ug/Kg	08/01/14	JLI	SW8260	
1,2-Dichlorobenzene	ND	310	34	ug/Kg	08/02/14	JLI	SW8260	
1,2-Dichloroethane	ND	6.2	0.54	ug/Kg	08/01/14	JLI	SW8260	
1,2-Dichloropropane	ND	6.2	0.88	ug/Kg	08/01/14	JLI	SW8260	
1,3,5-Trimethylbenzene	ND	310	41	ug/Kg	08/02/14	JLI	SW8260	
1,3-Dichlorobenzene	ND	310	46	ug/Kg	08/02/14	JLI	SW8260	
1,3-Dichloropropane	ND	6.2	0.65	ug/Kg	08/01/14	JLI	SW8260	
1,4-Dichlorobenzene	ND	310	49	ug/Kg	08/02/14	JLI	SW8260	
2,2-Dichloropropane	ND	6.2	1.0	ug/Kg	08/01/14	JLI	SW8260	
2-Chlorotoluene	ND	310	49	ug/Kg	08/02/14	JLI	SW8260	
2-Hexanone	ND	31	2.8	ug/Kg	08/01/14	JLI	SW8260	
2-Isopropyltoluene	ND	310	43	ug/Kg	08/02/14	JLI	SW8260	1

Project ID: 526 UNION AVE., BROOKLYN
Client ID: B2 8-10

Phoenix I.D.: BG85528

Parameter	Result		RL/ PQL	LOD/ MDL	Units	Date/Time	By	Reference	
4-Chlorotoluene	ND		310	36	ug/Kg	08/02/14	JLI	SW8260	
4-Methyl-2-pentanone	ND		31	1.5	ug/Kg	08/01/14	JLI	SW8260	
Acetone	190	S	62	6.1	ug/Kg	08/01/14	JLI	SW8260	
Acrylonitrile	ND		12	3.5	ug/Kg	08/01/14	JLI	SW8260	
Benzene	ND		6.2	1.2	ug/Kg	08/01/14	JLI	SW8260	
Bromobenzene	ND		310	40	ug/Kg	08/02/14	JLI	SW8260	
Bromochloromethane	ND		6.2	0.90	ug/Kg	08/01/14	JLI	SW8260	
Bromodichloromethane	ND		6.2	0.77	ug/Kg	08/01/14	JLI	SW8260	
Bromoform	ND		6.2	0.86	ug/Kg	08/01/14	JLI	SW8260	
Bromomethane	ND		6.2	4.8	ug/Kg	08/01/14	JLI	SW8260	
Carbon Disulfide	2.6	J	6.2	1.0	ug/Kg	08/01/14	JLI	SW8260	
Carbon tetrachloride	ND		6.2	0.72	ug/Kg	08/01/14	JLI	SW8260	
Chlorobenzene	ND		6.2	0.91	ug/Kg	08/01/14	JLI	SW8260	
Chloroethane	ND		6.2	1.4	ug/Kg	08/01/14	JLI	SW8260	
Chloroform	ND		6.2	1.1	ug/Kg	08/01/14	JLI	SW8260	
Chloromethane	ND		6.2	3.2	ug/Kg	08/01/14	JLI	SW8260	
cis-1,2-Dichloroethene	ND		6.2	1.3	ug/Kg	08/01/14	JLI	SW8260	
cis-1,3-Dichloropropene	ND		6.2	0.67	ug/Kg	08/01/14	JLI	SW8260	
Dibromochloromethane	ND		6.2	0.69	ug/Kg	08/01/14	JLI	SW8260	
Dibromomethane	ND		6.2	0.78	ug/Kg	08/01/14	JLI	SW8260	
Dichlorodifluoromethane	ND		6.2	1.6	ug/Kg	08/01/14	JLI	SW8260	
Ethylbenzene	ND		6.2	1.1	ug/Kg	08/01/14	JLI	SW8260	
Hexachlorobutadiene	ND		310	65	ug/Kg	08/02/14	JLI	SW8260	
Isopropylbenzene	ND		310	59	ug/Kg	08/02/14	JLI	SW8260	
m&p-Xylene	ND		6.2	2.4	ug/Kg	08/01/14	JLI	SW8260	
Methyl Ethyl Ketone	47		37	5.4	ug/Kg	08/01/14	JLI	SW8260	
Methyl t-butyl ether (MTBE)	ND		12	1.7	ug/Kg	08/01/14	JLI	SW8260	
Methylene chloride	1.7	JS	6.2	1.0	ug/Kg	08/01/14	JLI	SW8260	
Naphthalene	ND		310	83	ug/Kg	08/02/14	JLI	SW8260	
n-Butylbenzene	ND		310	56	ug/Kg	08/02/14	JLI	SW8260	
n-Propylbenzene	ND		310	56	ug/Kg	08/02/14	JLI	SW8260	
o-Xylene	ND		6.2	2.4	ug/Kg	08/01/14	JLI	SW8260	
p-Isopropyltoluene	ND		310	44	ug/Kg	08/02/14	JLI	SW8260	
sec-Butylbenzene	ND		310	58	ug/Kg	08/02/14	JLI	SW8260	
Styrene	ND		6.2	1.8	ug/Kg	08/01/14	JLI	SW8260	
tert-Butylbenzene	ND		310	49	ug/Kg	08/02/14	JLI	SW8260	
Tetrachloroethene	ND		6.2	1.3	ug/Kg	08/01/14	JLI	SW8260	
Tetrahydrofuran (THF)	ND		12	5.6	ug/Kg	08/01/14	JLI	SW8260	1
Toluene	ND		6.2	0.98	ug/Kg	08/01/14	JLI	SW8260	
trans-1,2-Dichloroethene	ND		6.2	1.2	ug/Kg	08/01/14	JLI	SW8260	
trans-1,3-Dichloropropene	ND		6.2	1.3	ug/Kg	08/01/14	JLI	SW8260	
trans-1,4-dichloro-2-butene	ND		620	570	ug/Kg	08/02/14	JLI	SW8260	
Trichloroethene	ND		6.2	1.3	ug/Kg	08/01/14	JLI	SW8260	
Trichlorofluoromethane	ND		6.2	1.4	ug/Kg	08/01/14	JLI	SW8260	
Trichlorotrifluoroethane	ND		6.2	0.96	ug/Kg	08/01/14	JLI	SW8260	
Vinyl chloride	ND		6.2	2.0	ug/Kg	08/01/14	JLI	SW8260	
QA/QC Surrogates									
% 1,2-dichlorobenzene-d4	103				%	08/02/14	JLI	70 - 130 %	
% Bromofluorobenzene	79				%	08/02/14	JLI	70 - 130 %	

Parameter	Result		RL/ PQL	LOD/ MDL	Units	Date/Time	By	Reference	
% Dibromofluoromethane	96				%	08/01/14	JLI	70 - 130 %	
% Toluene-d8	95				%	08/01/14	JLI	70 - 130 %	
Semivolatiles									
1,2,4,5-Tetrachlorobenzene	ND		290	140	ug/Kg	08/01/14	DD	SW 8270	
1,2,4-Trichlorobenzene	ND		290	120	ug/Kg	08/01/14	DD	SW 8270	
1,2-Dichlorobenzene	ND		290	120	ug/Kg	08/01/14	DD	SW 8270	
1,2-Diphenylhydrazine	ND		290	130	ug/Kg	08/01/14	DD	SW 8270	
1,3-Dichlorobenzene	ND		290	120	ug/Kg	08/01/14	DD	SW 8270	
1,4-Dichlorobenzene	ND		290	120	ug/Kg	08/01/14	DD	SW 8270	
2,4,5-Trichlorophenol	ND		290	220	ug/Kg	08/01/14	DD	SW 8270	
2,4,6-Trichlorophenol	ND		290	130	ug/Kg	08/01/14	DD	SW 8270	
2,4-Dichlorophenol	ND		290	140	ug/Kg	08/01/14	DD	SW 8270	
2,4-Dimethylphenol	ND		290	100	ug/Kg	08/01/14	DD	SW 8270	
2,4-Dinitrophenol	ND		2100	290	ug/Kg	08/01/14	DD	SW 8270	
2,4-Dinitrotoluene	ND		290	160	ug/Kg	08/01/14	DD	SW 8270	
2,6-Dinitrotoluene	ND		290	130	ug/Kg	08/01/14	DD	SW 8270	
2-Chloronaphthalene	ND		290	120	ug/Kg	08/01/14	DD	SW 8270	
2-Chlorophenol	ND		290	120	ug/Kg	08/01/14	DD	SW 8270	
2-Methylnaphthalene	ND		290	120	ug/Kg	08/01/14	DD	SW 8270	
2-Methylphenol (o-cresol)	ND		290	190	ug/Kg	08/01/14	DD	SW 8270	
2-Nitroaniline	ND		2100	410	ug/Kg	08/01/14	DD	SW 8270	
2-Nitrophenol	ND		290	260	ug/Kg	08/01/14	DD	SW 8270	
3&4-Methylphenol (m&p-cresol)	ND		290	160	ug/Kg	08/01/14	DD	SW 8270	1
3,3'-Dichlorobenzidine	ND		820	190	ug/Kg	08/01/14	DD	SW 8270	
3-Nitroaniline	ND		2100	890	ug/Kg	08/01/14	DD	SW 8270	
4,6-Dinitro-2-methylphenol	ND		2100	440	ug/Kg	08/01/14	DD	SW 8270	
4-Bromophenyl phenyl ether	ND		290	120	ug/Kg	08/01/14	DD	SW 8270	
4-Chloro-3-methylphenol	ND		290	140	ug/Kg	08/01/14	DD	SW 8270	
4-Chloroaniline	ND		820	190	ug/Kg	08/01/14	DD	SW 8270	
4-Chlorophenyl phenyl ether	ND		290	140	ug/Kg	08/01/14	DD	SW 8270	
4-Nitroaniline	ND		2100	140	ug/Kg	08/01/14	DD	SW 8270	
4-Nitrophenol	ND		2100	190	ug/Kg	08/01/14	DD	SW 8270	
Acenaphthene	ND		290	120	ug/Kg	08/01/14	DD	SW 8270	
Acenaphthylene	ND		290	110	ug/Kg	08/01/14	DD	SW 8270	
Acetophenone	ND		290	130	ug/Kg	08/01/14	DD	SW 8270	
Aniline	ND		2100	830	ug/Kg	08/01/14	DD	SW 8270	
Anthracene	ND		290	130	ug/Kg	08/01/14	DD	SW 8270	
Benz(a)anthracene	200	J	290	140	ug/Kg	08/01/14	DD	SW 8270	
Benzidine	ND		820	240	ug/Kg	08/01/14	DD	SW 8270	
Benzo(a)pyrene	170	J	290	130	ug/Kg	08/01/14	DD	SW 8270	
Benzo(b)fluoranthene	210	J	290	140	ug/Kg	08/01/14	DD	SW 8270	
Benzo(ghi)perylene	ND		290	130	ug/Kg	08/01/14	DD	SW 8270	
Benzo(k)fluoranthene	ND		290	140	ug/Kg	08/01/14	DD	SW 8270	
Benzoic acid	ND		2100	820	ug/Kg	08/01/14	DD	SW 8270	1
Benzyl butyl phthalate	ND		290	110	ug/Kg	08/01/14	DD	SW 8270	
Bis(2-chloroethoxy)methane	ND		290	110	ug/Kg	08/01/14	DD	SW 8270	
Bis(2-chloroethyl)ether	ND		290	110	ug/Kg	08/01/14	DD	SW 8270	
Bis(2-chloroisopropyl)ether	ND		290	110	ug/Kg	08/01/14	DD	SW 8270	1
Bis(2-ethylhexyl)phthalate	ND		290	120	ug/Kg	08/01/14	DD	SW 8270	

Project ID: 526 UNION AVE., BROOKLYN
Client ID: B2 8-10

Phoenix I.D.: BG85528

Parameter	Result		RL/ PQL	LOD/ MDL	Units	Date/Time	By	Reference
Carbazole	ND		2100	310	ug/Kg	08/01/14	DD	SW 8270
Chrysene	210	J	290	140	ug/Kg	08/01/14	DD	SW 8270
Dibenz(a,h)anthracene	ND		290	130	ug/Kg	08/01/14	DD	SW 8270
Dibenzofuran	ND		290	120	ug/Kg	08/01/14	DD	SW 8270
Diethyl phthalate	ND		290	130	ug/Kg	08/01/14	DD	SW 8270
Dimethylphthalate	ND		290	130	ug/Kg	08/01/14	DD	SW 8270
Di-n-butylphthalate	ND		290	110	ug/Kg	08/01/14	DD	SW 8270
Di-n-octylphthalate	ND		290	110	ug/Kg	08/01/14	DD	SW 8270
Fluoranthene	440		290	130	ug/Kg	08/01/14	DD	SW 8270
Fluorene	ND		290	140	ug/Kg	08/01/14	DD	SW 8270
Hexachlorobenzene	ND		290	120	ug/Kg	08/01/14	DD	SW 8270
Hexachlorobutadiene	ND		290	150	ug/Kg	08/01/14	DD	SW 8270
Hexachlorocyclopentadiene	ND		290	130	ug/Kg	08/01/14	DD	SW 8270
Hexachloroethane	ND		290	120	ug/Kg	08/01/14	DD	SW 8270
Indeno(1,2,3-cd)pyrene	ND		290	140	ug/Kg	08/01/14	DD	SW 8270
Isophorone	ND		290	110	ug/Kg	08/01/14	DD	SW 8270
Naphthalene	ND		290	120	ug/Kg	08/01/14	DD	SW 8270
Nitrobenzene	ND		290	140	ug/Kg	08/01/14	DD	SW 8270
N-Nitrosodimethylamine	ND		290	120	ug/Kg	08/01/14	DD	SW 8270
N-Nitrosodi-n-propylamine	ND		290	130	ug/Kg	08/01/14	DD	SW 8270
N-Nitrosodiphenylamine	ND		290	160	ug/Kg	08/01/14	DD	SW 8270
Pentachloronitrobenzene	ND		290	150	ug/Kg	08/01/14	DD	SW 8270
Pentachlorophenol	ND		290	160	ug/Kg	08/01/14	DD	SW 8270
Phenanthrene	350		290	120	ug/Kg	08/01/14	DD	SW 8270
Phenol	ND		290	130	ug/Kg	08/01/14	DD	SW 8270
Pyrene	400		290	140	ug/Kg	08/01/14	DD	SW 8270
Pyridine	ND		290	100	ug/Kg	08/01/14	DD	SW 8270
QA/QC Surrogates								
% 2,4,6-Tribromophenol	80				%	08/01/14	DD	30 - 130 %
% 2-Fluorobiphenyl	72				%	08/01/14	DD	30 - 130 %
% 2-Fluorophenol	70				%	08/01/14	DD	30 - 130 %
% Nitrobenzene-d5	73				%	08/01/14	DD	30 - 130 %
% Phenol-d5	72				%	08/01/14	DD	30 - 130 %
% Terphenyl-d14	95				%	08/01/14	DD	30 - 130 %

Parameter	Result	RL/ PQL	LOD/ MDL	Units	Date/Time	By	Reference

1 = This parameter is not certified by NY NELAC for this matrix. NY NELAC does not offer certification for all parameters at this time.

RL/PQL=Reporting/Practical Quantitation Level (Equivalent to NELAC LOQ, Limit of Quanitation) ND=Not Detected
BRL=Below Reporting Level LOD=Limit of Detection MDL=Method Detection Limit

Comments:

Per 1.4.6 of EPA method 8270D, 1,2-Diphenylhydrazine is unstable and readily converts to Azobenzene. Azobenzene is used for the calibration of 1,2-Diphenylhydrazine.

This sample was not collected in accordance with EPA method 5035. NELAC requires the laboratory to qualify the volatile soil data as biased low.

Volatile Comment:
There was a suppression of the last internal standard in the low level analysis, all affected compounds are reported from the methanol preserved high level analysis which did not exhibit this interference.

All soils, solids and sludges are reported on a dry weight basis unless otherwise noted in the sample comments.

If there are any questions regarding this data, please call Phoenix Client Services at extension 200.
This report must not be reproduced except in full as defined by the attached chain of custody.

PLEASE NOTE: THIS PROGRESS REPORT IS CONSIDERED PRELIMINARY DATA. THE RESULTS ENTERED HAVE NOT BEEN EXAMINED BY OUR QA/QC DEPARTMENT.

Phyllis Shiller, Laboratory Director
August 04, 2014

Environmental Laboratories, Inc.
587 East Middle Turnpike, P.O.Box 370, Manchester, CT 06045
Tel. (860) 645-1102 Fax (860) 645-0823

NY # 11301

Draft Progress Report

August 04, 2014

FOR: Attn: Mr. Charles B. Sosik, P.G.
Environmental Business Consultants
1808 Middle Country Rd
Ridge NY 11961-2406

Sample Information		Custody Information		Date	Time
Matrix:	SOIL	Collected by:		07/29/14	8:40
Location Code:	EBC	Received by:	LB	07/31/14	16:10
Rush Request:	72 Hour	Analyzed by:	see "By" below		
P.O.#:					

Laboratory Data

SDG ID: GBG85525
Phoenix ID: BG85529

Project ID: 526 UNION AVE., BROOKLYN
Client ID: B3 0-2

Parameter	Result	RL/ PQL	Units	Date/Time	By	Reference
Silver	< 0.38	0.38	mg/Kg	08/03/14	LK	SW6010
Aluminum	5860	38	mg/Kg	08/02/14	LK	SW6010
Arsenic	4.3	0.8	mg/Kg	08/03/14	LK	SW6010
Barium	69.3	0.8	mg/Kg	08/03/14	LK	SW6010
Beryllium	< 0.30	0.30	mg/Kg	08/03/14	LK	SW6010
Calcium	50900	38	mg/Kg	08/02/14	LK	SW6010
Cadmium	1.69	0.38	mg/Kg	08/03/14	LK	SW6010
Cobalt	5.70	0.38	mg/Kg	08/03/14	LK	SW6010
Chromium	33.1	0.38	mg/Kg	08/03/14	LK	SW6010
Copper	49.4	0.38	mg/kg	08/03/14	LK	SW6010
Iron	16400	38	mg/Kg	08/02/14	LK	SW6010
Mercury	30.9	3.3	mg/Kg	08/01/14	MA	SW-7471
Potassium	1110	8	mg/Kg	08/03/14	LK	SW6010
Magnesium	13300	38	mg/Kg	08/02/14	LK	SW6010
Manganese	212	3.8	mg/Kg	08/02/14	LK	SW6010
Sodium	184	8	mg/Kg	08/03/14	LK	SW6010
Nickel	18.1	0.38	mg/Kg	08/03/14	LK	SW6010
Lead	85.7	0.8	mg/Kg	08/03/14	LK	SW6010
Antimony	< 1.9	1.9	mg/Kg	08/03/14	LK	SW6010
Selenium	< 1.5	1.5	mg/Kg	08/03/14	LK	SW6010
TCLP Silver	< 0.10	0.10	mg/L	08/03/14	LK	SW6010
TCLP Arsenic	< 0.10	0.10	mg/L	08/03/14	LK	SW6010
TCLP Barium	0.93	0.10	mg/L	08/03/14	LK	SW6010
TCLP Cadmium	Pending		mg/L			SW6010
TCLP Chromium	0.23	0.10	mg/L	08/03/14	LK	SW6010
TCLP Mercury	< 0.0002	0.0002	mg/L	08/01/14	MA	SW7470
TCLP Lead	3.37	0.10	mg/L	08/03/14	LK	SW6010
TCLP Selenium	< 0.10	0.10	mg/L	08/03/14	LK	SW6010

Project ID: 526 UNION AVE., BROOKLYN
Client ID: B3 0-2

Phoenix I.D.: BG85529

Parameter	Result	RL/ PQL	Units	Date/Time	By	Reference
Thallium	< 1.5	1.5	mg/Kg	08/03/14	LK	SW6010
TCLP Metals Digestion	Pending					SW3005
Vanadium	30.3	0.4	mg/Kg	08/03/14	LK	SW6010
Zinc	124	0.8	mg/Kg	08/03/14	LK	SW6010
Percent Solid	87		%	07/31/14	I	E160.3
Mercury Digestion	Completed			08/01/14	I/I	SW7471
TCLP Digestion Mercury	Completed			08/01/14	I/I	E1311/7470
TCLP Extraction for Metals	Completed			07/31/14	I	EPA 1311
Total Metals Digest	Completed			07/31/14	CB/AG	SW846 - 3050

RL/PQL=Reporting/Practical Quantitation Level (Equivalent to NELAC LOQ, Limit of Quanitation) ND=Not Detected
BRL=Below Reporting Level

Comments:

Please be advised that the NY unrestricted soil criteria for chromium is based on hexavalent chromium and trivalent chromium.

All soils, solids and sludges are reported on a dry weight basis unless otherwise noted in the sample comments.

If there are any questions regarding this data, please call Phoenix Client Services at extension 200.
This report must not be reproduced except in full as defined by the attached chain of custody.

PLEASE NOTE: THIS PROGRESS REPORT IS CONSIDERED PRELIMINARY DATA. THE RESULTS ENTERED HAVE NOT BEEN EXAMINED BY OUR QA/QC DEPARTMENT.

Phyllis Shiller, Laboratory Director
August 04, 2014

PHOENIX

Environmental Laboratories, Inc.
587 East Middle Turnpike, P.O.Box 370, Manchester, CT 06045
Tel. (860) 645-1102 Fax (860) 645-0823

ACCREDITED IN ACCORDANCE WITH nelac NY # 11301

Draft Progress Report

August 04, 2014

FOR: Attn: Mr. Charles B. Sosik, P.G.
Environmental Business Consultants
1808 Middle Country Rd
Ridge NY 11961-2406

Sample Information		Custody Information		Date	Time
Matrix:	SOIL	Collected by:		07/29/14	9:00
Location Code:	EBC	Received by:	LB	07/31/14	16:10
Rush Request:	72 Hour	Analyzed by:	see "By" below		
P.O.#:					

Laboratory Data

SDG ID: GBG85525
Phoenix ID: BG85530

Project ID: 526 UNION AVE., BROOKLYN
Client ID: B3 8-10

Parameter	Result	RL/ PQL	LOD/ MDL	Units	Date/Time	By	Reference
Percent Solid	77			%	07/31/14	I	E160.3
Soil Extraction for SVOA	Completed				07/31/14	JJ/HF	SW3545
Volatiles							
1,1,1,2-Tetrachloroethane	ND	6.5	1.1	ug/Kg	08/01/14	JLI	SW8260
1,1,1-Trichloroethane	ND	6.5	1.3	ug/Kg	08/01/14	JLI	SW8260
1,1,2,2-Tetrachloroethane	ND	6.5	0.92	ug/Kg	08/01/14	JLI	SW8260
1,1,2-Trichloroethane	ND	6.5	0.64	ug/Kg	08/01/14	JLI	SW8260
1,1-Dichloroethane	ND	6.5	1.3	ug/Kg	08/01/14	JLI	SW8260
1,1-Dichloroethene	ND	6.5	1.4	ug/Kg	08/01/14	JLI	SW8260
1,1-Dichloropropene	ND	6.5	1.3	ug/Kg	08/01/14	JLI	SW8260
1,2,3-Trichlorobenzene	ND	320	65	ug/Kg	08/02/14	JLI	SW8260
1,2,3-Trichloropropane	ND	320	46	ug/Kg	08/02/14	JLI	SW8260
1,2,4-Trichlorobenzene	ND	320	65	ug/Kg	08/02/14	JLI	SW8260
1,2,4-Trimethylbenzene	ND	320	47	ug/Kg	08/02/14	JLI	SW8260
1,2-Dibromo-3-chloropropane	ND	320	87	ug/Kg	08/02/14	JLI	SW8260
1,2-Dibromoethane	ND	6.5	1.7	ug/Kg	08/01/14	JLI	SW8260
1,2-Dichlorobenzene	ND	320	36	ug/Kg	08/02/14	JLI	SW8260
1,2-Dichloroethane	ND	6.5	0.57	ug/Kg	08/01/14	JLI	SW8260
1,2-Dichloropropane	ND	6.5	0.92	ug/Kg	08/01/14	JLI	SW8260
1,3,5-Trimethylbenzene	ND	320	43	ug/Kg	08/02/14	JLI	SW8260
1,3-Dichlorobenzene	ND	320	48	ug/Kg	08/02/14	JLI	SW8260
1,3-Dichloropropane	ND	6.5	0.69	ug/Kg	08/01/14	JLI	SW8260
1,4-Dichlorobenzene	ND	320	51	ug/Kg	08/02/14	JLI	SW8260
2,2-Dichloropropane	ND	6.5	1.1	ug/Kg	08/01/14	JLI	SW8260
2-Chlorotoluene	ND	320	52	ug/Kg	08/02/14	JLI	SW8260
2-Hexanone	ND	32	2.9	ug/Kg	08/01/14	JLI	SW8260
2-Isopropyltoluene	ND	320	45	ug/Kg	08/02/14	JLI	SW8260 1

Project ID: 526 UNION AVE., BROOKLYN
Client ID: B3 8-10

Phoenix I.D.: BG85530

Parameter	Result		RL/ PQL	LOD/ MDL	Units	Date/Time	By	Reference	
4-Chlorotoluene	ND		320	38	ug/Kg	08/02/14	JLI	SW8260	
4-Methyl-2-pentanone	ND		32	1.5	ug/Kg	08/01/14	JLI	SW8260	
Acetone	110	S	65	6.5	ug/Kg	08/01/14	JLI	SW8260	
Acrylonitrile	ND		13	3.6	ug/Kg	08/01/14	JLI	SW8260	
Benzene	ND		6.5	1.3	ug/Kg	08/01/14	JLI	SW8260	
Bromobenzene	ND		320	42	ug/Kg	08/02/14	JLI	SW8260	
Bromochloromethane	ND		6.5	0.95	ug/Kg	08/01/14	JLI	SW8260	
Bromodichloromethane	ND		6.5	0.81	ug/Kg	08/01/14	JLI	SW8260	
Bromoform	ND		6.5	0.91	ug/Kg	08/01/14	JLI	SW8260	
Bromomethane	ND		6.5	5.0	ug/Kg	08/01/14	JLI	SW8260	
Carbon Disulfide	3.0	J	6.5	1.1	ug/Kg	08/01/14	JLI	SW8260	
Carbon tetrachloride	ND		6.5	0.75	ug/Kg	08/01/14	JLI	SW8260	
Chlorobenzene	ND		6.5	0.96	ug/Kg	08/01/14	JLI	SW8260	
Chloroethane	ND		6.5	1.5	ug/Kg	08/01/14	JLI	SW8260	
Chloroform	ND		6.5	1.2	ug/Kg	08/01/14	JLI	SW8260	
Chloromethane	ND		6.5	3.4	ug/Kg	08/01/14	JLI	SW8260	
cis-1,2-Dichloroethene	ND		6.5	1.4	ug/Kg	08/01/14	JLI	SW8260	
cis-1,3-Dichloropropene	ND		6.5	0.70	ug/Kg	08/01/14	JLI	SW8260	
Dibromochloromethane	ND		6.5	0.73	ug/Kg	08/01/14	JLI	SW8260	
Dibromomethane	ND		6.5	0.82	ug/Kg	08/01/14	JLI	SW8260	
Dichlorodifluoromethane	ND		6.5	1.7	ug/Kg	08/01/14	JLI	SW8260	
Ethylbenzene	ND		6.5	1.2	ug/Kg	08/01/14	JLI	SW8260	
Hexachlorobutadiene	ND		320	68	ug/Kg	08/02/14	JLI	SW8260	
Isopropylbenzene	ND		320	62	ug/Kg	08/02/14	JLI	SW8260	
m&p-Xylene	ND		6.5	2.6	ug/Kg	08/01/14	JLI	SW8260	
Methyl Ethyl Ketone	ND		39	5.6	ug/Kg	08/01/14	JLI	SW8260	
Methyl t-butyl ether (MTBE)	ND		13	1.8	ug/Kg	08/01/14	JLI	SW8260	
Methylene chloride	ND		6.5	1.1	ug/Kg	08/01/14	JLI	SW8260	
Naphthalene	ND		320	87	ug/Kg	08/02/14	JLI	SW8260	
n-Butylbenzene	ND		320	59	ug/Kg	08/02/14	JLI	SW8260	
n-Propylbenzene	ND		320	58	ug/Kg	08/02/14	JLI	SW8260	
o-Xylene	ND		6.5	2.5	ug/Kg	08/01/14	JLI	SW8260	
p-Isopropyltoluene	ND		320	47	ug/Kg	08/02/14	JLI	SW8260	
sec-Butylbenzene	ND		320	61	ug/Kg	08/02/14	JLI	SW8260	
Styrene	ND		6.5	1.9	ug/Kg	08/01/14	JLI	SW8260	
tert-Butylbenzene	ND		320	52	ug/Kg	08/02/14	JLI	SW8260	
Tetrachloroethene	ND		6.5	1.4	ug/Kg	08/01/14	JLI	SW8260	
Tetrahydrofuran (THF)	ND		13	5.8	ug/Kg	08/01/14	JLI	SW8260	1
Toluene	1.5	J	6.5	1.0	ug/Kg	08/01/14	JLI	SW8260	
trans-1,2-Dichloroethene	ND		6.5	1.3	ug/Kg	08/01/14	JLI	SW8260	
trans-1,3-Dichloropropene	ND		6.5	1.3	ug/Kg	08/01/14	JLI	SW8260	
trans-1,4-dichloro-2-butene	ND		650	600	ug/Kg	08/02/14	JLI	SW8260	
Trichloroethene	ND		6.5	1.4	ug/Kg	08/01/14	JLI	SW8260	
Trichlorofluoromethane	ND		6.5	1.4	ug/Kg	08/01/14	JLI	SW8260	
Trichlorotrifluoroethane	ND		6.5	1.0	ug/Kg	08/01/14	JLI	SW8260	
Vinyl chloride	ND		6.5	2.1	ug/Kg	08/01/14	JLI	SW8260	
QA/QC Surrogates									
% 1,2-dichlorobenzene-d4	105				%	08/02/14	JLI	70 - 130 %	
% Bromofluorobenzene	78				%	08/02/14	JLI	70 - 130 %	

Parameter	Result	RL/ PQL	LOD/ MDL	Units	Date/Time	By	Reference	
% Dibromofluoromethane	96			%	08/01/14	JLI	70 - 130 %	
% Toluene-d8	96			%	08/01/14	JLI	70 - 130 %	

Semivolatiles

1,2,4,5-Tetrachlorobenzene	ND	300	150	ug/Kg	08/01/14	DD	SW 8270	
1,2,4-Trichlorobenzene	ND	300	130	ug/Kg	08/01/14	DD	SW 8270	
1,2-Dichlorobenzene	ND	300	120	ug/Kg	08/01/14	DD	SW 8270	
1,2-Diphenylhydrazine	ND	300	140	ug/Kg	08/01/14	DD	SW 8270	
1,3-Dichlorobenzene	ND	300	120	ug/Kg	08/01/14	DD	SW 8270	
1,4-Dichlorobenzene	ND	300	120	ug/Kg	08/01/14	DD	SW 8270	
2,4,5-Trichlorophenol	ND	300	230	ug/Kg	08/01/14	DD	SW 8270	
2,4,6-Trichlorophenol	ND	300	140	ug/Kg	08/01/14	DD	SW 8270	
2,4-Dichlorophenol	ND	300	150	ug/Kg	08/01/14	DD	SW 8270	
2,4-Dimethylphenol	ND	300	100	ug/Kg	08/01/14	DD	SW 8270	
2,4-Dinitrophenol	ND	2100	300	ug/Kg	08/01/14	DD	SW 8270	
2,4-Dinitrotoluene	ND	300	170	ug/Kg	08/01/14	DD	SW 8270	
2,6-Dinitrotoluene	ND	300	130	ug/Kg	08/01/14	DD	SW 8270	
2-Chloronaphthalene	ND	300	120	ug/Kg	08/01/14	DD	SW 8270	
2-Chlorophenol	ND	300	120	ug/Kg	08/01/14	DD	SW 8270	
2-Methylnaphthalene	ND	300	130	ug/Kg	08/01/14	DD	SW 8270	
2-Methylphenol (o-cresol)	ND	300	200	ug/Kg	08/01/14	DD	SW 8270	
2-Nitroaniline	ND	2100	430	ug/Kg	08/01/14	DD	SW 8270	
2-Nitrophenol	ND	300	270	ug/Kg	08/01/14	DD	SW 8270	
3&4-Methylphenol (m&p-cresol)	ND	300	170	ug/Kg	08/01/14	DD	SW 8270	1
3,3'-Dichlorobenzidine	ND	840	200	ug/Kg	08/01/14	DD	SW 8270	
3-Nitroaniline	ND	2100	920	ug/Kg	08/01/14	DD	SW 8270	
4,6-Dinitro-2-methylphenol	ND	2100	450	ug/Kg	08/01/14	DD	SW 8270	
4-Bromophenyl phenyl ether	ND	300	120	ug/Kg	08/01/14	DD	SW 8270	
4-Chloro-3-methylphenol	ND	300	150	ug/Kg	08/01/14	DD	SW 8270	
4-Chloroaniline	ND	840	200	ug/Kg	08/01/14	DD	SW 8270	
4-Chlorophenyl phenyl ether	ND	300	140	ug/Kg	08/01/14	DD	SW 8270	
4-Nitroaniline	ND	2100	140	ug/Kg	08/01/14	DD	SW 8270	
4-Nitrophenol	ND	2100	190	ug/Kg	08/01/14	DD	SW 8270	
Acenaphthene	ND	300	130	ug/Kg	08/01/14	DD	SW 8270	
Acenaphthylene	ND	300	120	ug/Kg	08/01/14	DD	SW 8270	
Acetophenone	ND	300	130	ug/Kg	08/01/14	DD	SW 8270	
Aniline	ND	2100	850	ug/Kg	08/01/14	DD	SW 8270	
Anthracene	ND	300	140	ug/Kg	08/01/14	DD	SW 8270	
Benz(a)anthracene	ND	300	140	ug/Kg	08/01/14	DD	SW 8270	
Benzidine	ND	840	250	ug/Kg	08/01/14	DD	SW 8270	
Benzo(a)pyrene	ND	300	140	ug/Kg	08/01/14	DD	SW 8270	
Benzo(b)fluoranthene	ND	300	140	ug/Kg	08/01/14	DD	SW 8270	
Benzo(ghi)perylene	ND	300	140	ug/Kg	08/01/14	DD	SW 8270	
Benzo(k)fluoranthene	ND	300	140	ug/Kg	08/01/14	DD	SW 8270	
Benzoic acid	ND	2100	840	ug/Kg	08/01/14	DD	SW 8270	1
Benzyl butyl phthalate	ND	300	110	ug/Kg	08/01/14	DD	SW 8270	
Bis(2-chloroethoxy)methane	ND	300	120	ug/Kg	08/01/14	DD	SW 8270	
Bis(2-chloroethyl)ether	ND	300	110	ug/Kg	08/01/14	DD	SW 8270	
Bis(2-chloroisopropyl)ether	ND	300	120	ug/Kg	08/01/14	DD	SW 8270	1
Bis(2-ethylhexyl)phthalate	ND	300	120	ug/Kg	08/01/14	DD	SW 8270	

Project ID: 526 UNION AVE., BROOKLYN
Client ID: B3 8-10

Phoenix I.D.: BG85530

Parameter	Result		RL/ PQL	LOD/ MDL	Units	Date/Time	By	Reference
Carbazole	ND		2100	320	ug/Kg	08/01/14	DD	SW 8270
Chrysene	ND		300	140	ug/Kg	08/01/14	DD	SW 8270
Dibenz(a,h)anthracene	ND		300	140	ug/Kg	08/01/14	DD	SW 8270
Dibenzofuran	ND		300	120	ug/Kg	08/01/14	DD	SW 8270
Diethyl phthalate	ND		300	130	ug/Kg	08/01/14	DD	SW 8270
Dimethylphthalate	ND		300	130	ug/Kg	08/01/14	DD	SW 8270
Di-n-butylphthalate	ND		300	110	ug/Kg	08/01/14	DD	SW 8270
Di-n-octylphthalate	ND		300	110	ug/Kg	08/01/14	DD	SW 8270
Fluoranthene	140	J	300	140	ug/Kg	08/01/14	DD	SW 8270
Fluorene	ND		300	140	ug/Kg	08/01/14	DD	SW 8270
Hexachlorobenzene	ND		300	120	ug/Kg	08/01/14	DD	SW 8270
Hexachlorobutadiene	ND		300	150	ug/Kg	08/01/14	DD	SW 8270
Hexachlorocyclopentadiene	ND		300	130	ug/Kg	08/01/14	DD	SW 8270
Hexachloroethane	ND		300	130	ug/Kg	08/01/14	DD	SW 8270
Indeno(1,2,3-cd)pyrene	ND		300	140	ug/Kg	08/01/14	DD	SW 8270
Isophorone	ND		300	120	ug/Kg	08/01/14	DD	SW 8270
Naphthalene	ND		300	120	ug/Kg	08/01/14	DD	SW 8270
Nitrobenzene	ND		300	150	ug/Kg	08/01/14	DD	SW 8270
N-Nitrosodimethylamine	ND		300	120	ug/Kg	08/01/14	DD	SW 8270
N-Nitrosodi-n-propylamine	ND		300	140	ug/Kg	08/01/14	DD	SW 8270
N-Nitrosodiphenylamine	ND		300	160	ug/Kg	08/01/14	DD	SW 8270
Pentachloronitrobenzene	ND		300	160	ug/Kg	08/01/14	DD	SW 8270
Pentachlorophenol	ND		300	160	ug/Kg	08/01/14	DD	SW 8270
Phenanthrene	ND		300	120	ug/Kg	08/01/14	DD	SW 8270
Phenol	ND		300	140	ug/Kg	08/01/14	DD	SW 8270
Pyrene	ND		300	150	ug/Kg	08/01/14	DD	SW 8270
Pyridine	ND		300	100	ug/Kg	08/01/14	DD	SW 8270
QA/QC Surrogates								
% 2,4,6-Tribromophenol	75				%	08/01/14	DD	30 - 130 %
% 2-Fluorobiphenyl	66				%	08/01/14	DD	30 - 130 %
% 2-Fluorophenol	63				%	08/01/14	DD	30 - 130 %
% Nitrobenzene-d5	63				%	08/01/14	DD	30 - 130 %
% Phenol-d5	65				%	08/01/14	DD	30 - 130 %
% Terphenyl-d14	99				%	08/01/14	DD	30 - 130 %

Parameter	Result	RL/ PQL	LOD/ MDL	Units	Date/Time	By	Reference

1 = This parameter is not certified by NY NELAC for this matrix. NY NELAC does not offer certification for all parameters at this time.

RL/PQL=Reporting/Practical Quantitation Level (Equivalent to NELAC LOQ, Limit of Quanitation) ND=Not Detected
BRL=Below Reporting Level LOD=Limit of Detection MDL=Method Detection Limit

Comments:

Per 1.4.6 of EPA method 8270D, 1,2-Diphenylhydrazine is unstable and readily converts to Azobenzene. Azobenzene is used for the calibration of 1,2-Diphenylhydrazine.

This sample was not collected in accordance with EPA method 5035. NELAC requires the laboratory to qualify the volatile soil data as biased low.

Volatile Comment:
There was a suppression of the last internal standard in the low level analysis, all affected compounds are reported from the methanol preserved high level analysis which did not exhibit this interference.

All soils, solids and sludges are reported on a dry weight basis unless otherwise noted in the sample comments.

If there are any questions regarding this data, please call Phoenix Client Services at extension 200.
This report must not be reproduced except in full as defined by the attached chain of custody.

PLEASE NOTE: THIS PROGRESS REPORT IS CONSIDERED PRELIMINARY DATA. THE RESULTS ENTERED HAVE NOT BEEN EXAMINED BY OUR QA/QC DEPARTMENT.

Phyllis Shiller, Laboratory Director
August 04, 2014

PHOENIX

Environmental Laboratories, Inc.
587 East Middle Turnpike, P.O.Box 370, Manchester, CT 06045
Tel. (860) 645-1102 Fax (860) 645-0823

ACCREDITED IN ACCORDANCE WITH nelac NY # 11301

Draft Progress Report

August 04, 2014

FOR: Attn: Mr. Charles B. Sosik, P.G.
Environmental Business Consultants
1808 Middle Country Rd
Ridge NY 11961-2406

Sample Information		Custody Information		Date	Time
Matrix:	SOIL	Collected by:		07/29/14	9:20
Location Code:	EBC	Received by:	LB	07/31/14	16:10
Rush Request:	72 Hour	Analyzed by:	see "By" below		
P.O.#:					

Laboratory Data

SDG ID: GBG85525
Phoenix ID: BG85531

Project ID: 526 UNION AVE., BROOKLYN
Client ID: B4 2-4

Parameter	Result	RL/ PQL	Units	Date/Time	By	Reference	
Silver	< 0.35	0.35	mg/Kg	08/03/14	LK	SW6010	
Aluminum	4010	35	mg/Kg	08/02/14	LK	SW6010	
Arsenic	6.2	0.7	mg/Kg	08/03/14	LK	SW6010	
Barium	56.6	0.7	mg/Kg	08/03/14	LK	SW6010	
Beryllium	< 0.28	0.28	mg/Kg	08/03/14	LK	SW6010	
Calcium	869	3.5	mg/Kg	08/03/14	LK	SW6010	
Cadmium	5.42	0.35	mg/Kg	08/03/14	LK	SW6010	
Cobalt	16.6	0.35	mg/Kg	08/03/14	LK	SW6010	
Chromium	19.1	0.35	mg/Kg	08/03/14	LK	SW6010	
Copper	41.6	0.35	mg/kg	08/03/14	LK	SW6010	
Iron	Pending		mg/Kg			SW6010	
Mercury	0.64	0.08	mg/Kg	08/01/14	MA	SW-7471	
Potassium	994	7	mg/Kg	08/03/14	LK	SW6010	
Magnesium	451	3.5	mg/Kg	08/03/14	LK	SW6010	
Manganese	776	3.5	mg/Kg	08/02/14	LK	SW6010	
Sodium	99	7	mg/Kg	08/03/14	LK	SW6010	
Nickel	21.8	0.35	mg/Kg	08/03/14	LK	SW6010	
Lead	241	6.9	mg/Kg	08/02/14	LK	SW6010	
Antimony	< 1.7	1.7	mg/Kg	08/03/14	LK	SW6010	
Selenium	< 1.4	1.4	mg/Kg	08/03/14	LK	SW6010	
TCLP Silver	< 0.10	0.10	mg/L	08/03/14	LK	SW6010	
TCLP Arsenic	< 0.10	0.10	mg/L	08/03/14	LK	SW6010	
TCLP Barium	0.21	0.10	mg/L	08/03/14	LK	SW6010	B
TCLP Cadmium	< 0.050	0.050	mg/L	08/03/14	LK	SW6010	
TCLP Chromium	< 0.10	0.10	mg/L	08/03/14	LK	SW6010	
TCLP Mercury	< 0.0002	0.0002	mg/L	08/01/14	MA	SW7470	
TCLP Lead	0.45	0.10	mg/L	08/03/14	LK	SW6010	
TCLP Selenium	< 0.10	0.10	mg/L	08/03/14	LK	SW6010	

Project ID: 526 UNION AVE., BROOKLYN
Client ID: B4 2-4

Phoenix I.D.: BG85531

Parameter	Result	RL/ PQL	Units	Date/Time	By	Reference
Thallium	< 1.4	1.4	mg/Kg	08/03/14	LK	SW6010
TCLP Metals Digestion	Completed			08/01/14	I/I	SW3005
Vanadium	35.3	0.3	mg/Kg	08/03/14	LK	SW6010
Zinc	192	6.9	mg/Kg	08/02/14	LK	SW6010
Percent Solid	89		%	07/31/14	I	E160.3
Mercury Digestion	Completed			08/01/14	I/I	SW7471
TCLP Digestion Mercury	Completed			08/01/14	I/I	E1311/7470
TCLP Extraction for Metals	Completed			07/31/14	I	EPA 1311
Total Metals Digest	Completed			07/31/14	CB/AG	SW846 - 3050

B = Present in blank, no bias suspected.

RL/PQL=Reporting/Practical Quantitation Level (Equivalent to NELAC LOQ, Limit of Quanitation) ND=Not Detected
BRL=Below Reporting Level

Comments:

Please be advised that the NY unrestricted soil criteria for chromium is based on hexavalent chromium and trivalent chromium.

All soils, solids and sludges are reported on a dry weight basis unless otherwise noted in the sample comments.

If there are any questions regarding this data, please call Phoenix Client Services at extension 200.
This report must not be reproduced except in full as defined by the attached chain of custody.

PLEASE NOTE: THIS PROGRESS REPORT IS CONSIDERED PRELIMINARY DATA. THE RESULTS ENTERED HAVE NOT BEEN EXAMINED BY OUR QA/QC DEPARTMENT.

Phyllis Shiller, Laboratory Director
August 04, 2014

PHOENIX

Environmental Laboratories, Inc.
587 East Middle Turnpike, P.O.Box 370, Manchester, CT 06045
Tel. (860) 645-1102 Fax (860) 645-0823

ACCREDITED IN ACCORDANCE WITH nelac NY # 11301

Draft Progress Report

August 04, 2014

FOR: Attn: Mr. Charles B. Sosik, P.G.
Environmental Business Consultants
1808 Middle Country Rd
Ridge NY 11961-2406

Sample Information		Custody Information		Date	Time
Matrix:	SOIL	Collected by:		07/29/14	9:40
Location Code:	EBC	Received by:	LB	07/31/14	16:10
Rush Request:	72 Hour	Analyzed by:	see "By" below		
P.O.#:					

Laboratory Data

SDG ID: GBG85525
Phoenix ID: BG85532

Project ID: 526 UNION AVE., BROOKLYN
Client ID: B4 8-10

Parameter	Result	RL/ PQL	LOD/ MDL	Units	Date/Time	By	Reference
Percent Solid	81			%	07/31/14	I	E160.3
Soil Extraction for SVOA	Completed				07/31/14	JJ/HF	SW3545
Volatiles							
1,1,1,2-Tetrachloroethane	ND	6.2	1.0	ug/Kg	08/01/14	JLI	SW8260
1,1,1-Trichloroethane	ND	6.2	1.2	ug/Kg	08/01/14	JLI	SW8260
1,1,2,2-Tetrachloroethane	ND	6.2	0.88	ug/Kg	08/01/14	JLI	SW8260
1,1,2-Trichloroethane	ND	6.2	0.60	ug/Kg	08/01/14	JLI	SW8260
1,1-Dichloroethane	ND	6.2	1.2	ug/Kg	08/01/14	JLI	SW8260
1,1-Dichloroethene	ND	6.2	1.3	ug/Kg	08/01/14	JLI	SW8260
1,1-Dichloropropene	ND	6.2	1.2	ug/Kg	08/01/14	JLI	SW8260
1,2,3-Trichlorobenzene	ND	6.2	1.2	ug/Kg	08/01/14	JLI	SW8260
1,2,3-Trichloropropane	ND	6.2	0.88	ug/Kg	08/01/14	JLI	SW8260
1,2,4-Trichlorobenzene	ND	6.2	1.2	ug/Kg	08/01/14	JLI	SW8260
1,2,4-Trimethylbenzene	ND	6.2	0.89	ug/Kg	08/01/14	JLI	SW8260
1,2-Dibromo-3-chloropropane	ND	6.2	1.7	ug/Kg	08/01/14	JLI	SW8260
1,2-Dibromoethane	ND	6.2	1.6	ug/Kg	08/01/14	JLI	SW8260
1,2-Dichlorobenzene	ND	6.2	0.68	ug/Kg	08/01/14	JLI	SW8260
1,2-Dichloroethane	ND	6.2	0.54	ug/Kg	08/01/14	JLI	SW8260
1,2-Dichloropropane	ND	6.2	0.88	ug/Kg	08/01/14	JLI	SW8260
1,3,5-Trimethylbenzene	ND	6.2	0.81	ug/Kg	08/01/14	JLI	SW8260
1,3-Dichlorobenzene	ND	6.2	0.91	ug/Kg	08/01/14	JLI	SW8260
1,3-Dichloropropane	ND	6.2	0.65	ug/Kg	08/01/14	JLI	SW8260
1,4-Dichlorobenzene	ND	6.2	0.98	ug/Kg	08/01/14	JLI	SW8260
2,2-Dichloropropane	ND	6.2	1.0	ug/Kg	08/01/14	JLI	SW8260
2-Chlorotoluene	ND	6.2	0.99	ug/Kg	08/01/14	JLI	SW8260
2-Hexanone	ND	31	2.8	ug/Kg	08/01/14	JLI	SW8260
2-Isopropyltoluene	ND	6.2	0.85	ug/Kg	08/01/14	JLI	SW8260 1

Project ID: 526 UNION AVE., BROOKLYN
Client ID: B4 8-10

Phoenix I.D.: BG85532

Parameter	Result		RL/ PQL	LOD/ MDL	Units	Date/Time	By	Reference	
4-Chlorotoluene	ND		6.2	0.72	ug/Kg	08/01/14	JLI	SW8260	
4-Methyl-2-pentanone	ND		31	1.5	ug/Kg	08/01/14	JLI	SW8260	
Acetone	24	JS	62	6.1	ug/Kg	08/01/14	JLI	SW8260	
Acrylonitrile	ND		12	3.5	ug/Kg	08/01/14	JLI	SW8260	
Benzene	ND		6.2	1.2	ug/Kg	08/01/14	JLI	SW8260	
Bromobenzene	ND		6.2	0.80	ug/Kg	08/01/14	JLI	SW8260	
Bromochloromethane	ND		6.2	0.90	ug/Kg	08/01/14	JLI	SW8260	
Bromodichloromethane	ND		6.2	0.77	ug/Kg	08/01/14	JLI	SW8260	
Bromoform	ND		6.2	0.86	ug/Kg	08/01/14	JLI	SW8260	
Bromomethane	ND		6.2	4.8	ug/Kg	08/01/14	JLI	SW8260	
Carbon Disulfide	ND		6.2	1.0	ug/Kg	08/01/14	JLI	SW8260	
Carbon tetrachloride	ND		6.2	0.72	ug/Kg	08/01/14	JLI	SW8260	
Chlorobenzene	ND		6.2	0.91	ug/Kg	08/01/14	JLI	SW8260	
Chloroethane	ND		6.2	1.4	ug/Kg	08/01/14	JLI	SW8260	
Chloroform	ND		6.2	1.1	ug/Kg	08/01/14	JLI	SW8260	
Chloromethane	ND		6.2	3.2	ug/Kg	08/01/14	JLI	SW8260	
cis-1,2-Dichloroethene	ND		6.2	1.3	ug/Kg	08/01/14	JLI	SW8260	
cis-1,3-Dichloropropene	ND		6.2	0.67	ug/Kg	08/01/14	JLI	SW8260	
Dibromochloromethane	ND		6.2	0.69	ug/Kg	08/01/14	JLI	SW8260	
Dibromomethane	ND		6.2	0.78	ug/Kg	08/01/14	JLI	SW8260	
Dichlorodifluoromethane	ND		6.2	1.6	ug/Kg	08/01/14	JLI	SW8260	
Ethylbenzene	ND		6.2	1.1	ug/Kg	08/01/14	JLI	SW8260	
Hexachlorobutadiene	ND		6.2	1.3	ug/Kg	08/01/14	JLI	SW8260	
Isopropylbenzene	ND		6.2	1.2	ug/Kg	08/01/14	JLI	SW8260	
m&p-Xylene	ND		6.2	2.4	ug/Kg	08/01/14	JLI	SW8260	
Methyl Ethyl Ketone	ND		37	5.4	ug/Kg	08/01/14	JLI	SW8260	
Methyl t-butyl ether (MTBE)	ND		12	1.7	ug/Kg	08/01/14	JLI	SW8260	
Methylene chloride	1.3	JS	6.2	1.0	ug/Kg	08/01/14	JLI	SW8260	
Naphthalene	ND		6.2	1.7	ug/Kg	08/01/14	JLI	SW8260	
n-Butylbenzene	ND		6.2	1.1	ug/Kg	08/01/14	JLI	SW8260	
n-Propylbenzene	ND		6.2	1.1	ug/Kg	08/01/14	JLI	SW8260	
o-Xylene	ND		6.2	2.4	ug/Kg	08/01/14	JLI	SW8260	
p-Isopropyltoluene	ND		6.2	0.89	ug/Kg	08/01/14	JLI	SW8260	
sec-Butylbenzene	ND		6.2	1.2	ug/Kg	08/01/14	JLI	SW8260	
Styrene	ND		6.2	1.8	ug/Kg	08/01/14	JLI	SW8260	
tert-Butylbenzene	ND		6.2	0.99	ug/Kg	08/01/14	JLI	SW8260	
Tetrachloroethene	ND		6.2	1.3	ug/Kg	08/01/14	JLI	SW8260	
Tetrahydrofuran (THF)	ND		12	5.6	ug/Kg	08/01/14	JLI	SW8260	1
Toluene	ND		6.2	0.98	ug/Kg	08/01/14	JLI	SW8260	
trans-1,2-Dichloroethene	ND		6.2	1.2	ug/Kg	08/01/14	JLI	SW8260	
trans-1,3-Dichloropropene	ND		6.2	1.3	ug/Kg	08/01/14	JLI	SW8260	
trans-1,4-dichloro-2-butene	ND		12	11	ug/Kg	08/01/14	JLI	SW8260	
Trichloroethene	ND		6.2	1.3	ug/Kg	08/01/14	JLI	SW8260	
Trichlorofluoromethane	ND		6.2	1.4	ug/Kg	08/01/14	JLI	SW8260	
Trichlorotrifluoroethane	ND		6.2	0.96	ug/Kg	08/01/14	JLI	SW8260	
Vinyl chloride	ND		6.2	2.0	ug/Kg	08/01/14	JLI	SW8260	
QA/QC Surrogates									
% 1,2-dichlorobenzene-d4	101				%	08/01/14	JLI	70 - 130 %	
% Bromofluorobenzene	95				%	08/01/14	JLI	70 - 130 %	

Project ID: 526 UNION AVE., BROOKLYN
Client ID: B4 8-10

Phoenix I.D.: BG85532

Parameter	Result	RL/ PQL	LOD/ MDL	Units	Date/Time	By	Reference	
% Dibromofluoromethane	91			%	08/01/14	JLI	70 - 130 %	
% Toluene-d8	101			%	08/01/14	JLI	70 - 130 %	
Semivolatiles								
1,2,4,5-Tetrachlorobenzene	ND	280	140	ug/Kg	08/01/14	DD	SW 8270	
1,2,4-Trichlorobenzene	ND	280	120	ug/Kg	08/01/14	DD	SW 8270	
1,2-Dichlorobenzene	ND	280	110	ug/Kg	08/01/14	DD	SW 8270	
1,2-Diphenylhydrazine	ND	280	130	ug/Kg	08/01/14	DD	SW 8270	
1,3-Dichlorobenzene	ND	280	120	ug/Kg	08/01/14	DD	SW 8270	
1,4-Dichlorobenzene	ND	280	120	ug/Kg	08/01/14	DD	SW 8270	
2,4,5-Trichlorophenol	ND	280	220	ug/Kg	08/01/14	DD	SW 8270	
2,4,6-Trichlorophenol	ND	280	130	ug/Kg	08/01/14	DD	SW 8270	
2,4-Dichlorophenol	ND	280	140	ug/Kg	08/01/14	DD	SW 8270	
2,4-Dimethylphenol	ND	280	99	ug/Kg	08/01/14	DD	SW 8270	
2,4-Dinitrophenol	ND	2000	280	ug/Kg	08/01/14	DD	SW 8270	
2,4-Dinitrotoluene	ND	280	160	ug/Kg	08/01/14	DD	SW 8270	
2,6-Dinitrotoluene	ND	280	130	ug/Kg	08/01/14	DD	SW 8270	
2-Chloronaphthalene	ND	280	110	ug/Kg	08/01/14	DD	SW 8270	
2-Chlorophenol	ND	280	110	ug/Kg	08/01/14	DD	SW 8270	
2-Methylnaphthalene	ND	280	120	ug/Kg	08/01/14	DD	SW 8270	
2-Methylphenol (o-cresol)	ND	280	190	ug/Kg	08/01/14	DD	SW 8270	
2-Nitroaniline	ND	2000	400	ug/Kg	08/01/14	DD	SW 8270	
2-Nitrophenol	ND	280	250	ug/Kg	08/01/14	DD	SW 8270	
3&4-Methylphenol (m&p-cresol)	ND	280	160	ug/Kg	08/01/14	DD	SW 8270	1
3,3'-Dichlorobenzidine	ND	800	190	ug/Kg	08/01/14	DD	SW 8270	
3-Nitroaniline	ND	2000	870	ug/Kg	08/01/14	DD	SW 8270	
4,6-Dinitro-2-methylphenol	ND	2000	430	ug/Kg	08/01/14	DD	SW 8270	
4-Bromophenyl phenyl ether	ND	280	120	ug/Kg	08/01/14	DD	SW 8270	
4-Chloro-3-methylphenol	ND	280	140	ug/Kg	08/01/14	DD	SW 8270	
4-Chloroaniline	ND	800	190	ug/Kg	08/01/14	DD	SW 8270	
4-Chlorophenyl phenyl ether	ND	280	130	ug/Kg	08/01/14	DD	SW 8270	
4-Nitroaniline	ND	2000	130	ug/Kg	08/01/14	DD	SW 8270	
4-Nitrophenol	ND	2000	180	ug/Kg	08/01/14	DD	SW 8270	
Acenaphthene	ND	280	120	ug/Kg	08/01/14	DD	SW 8270	
Acenaphthylene	ND	280	110	ug/Kg	08/01/14	DD	SW 8270	
Acetophenone	ND	280	120	ug/Kg	08/01/14	DD	SW 8270	
Aniline	ND	2000	810	ug/Kg	08/01/14	DD	SW 8270	
Anthracene	ND	280	130	ug/Kg	08/01/14	DD	SW 8270	
Benz(a)anthracene	ND	280	130	ug/Kg	08/01/14	DD	SW 8270	
Benzidine	ND	800	230	ug/Kg	08/01/14	DD	SW 8270	
Benzo(a)pyrene	ND	280	130	ug/Kg	08/01/14	DD	SW 8270	
Benzo(b)fluoranthene	ND	280	140	ug/Kg	08/01/14	DD	SW 8270	
Benzo(ghi)perylene	ND	280	130	ug/Kg	08/01/14	DD	SW 8270	
Benzo(k)fluoranthene	ND	280	130	ug/Kg	08/01/14	DD	SW 8270	
Benzoic acid	ND	2000	800	ug/Kg	08/01/14	DD	SW 8270	1
Benzyl butyl phthalate	ND	280	100	ug/Kg	08/01/14	DD	SW 8270	
Bis(2-chloroethoxy)methane	ND	280	110	ug/Kg	08/01/14	DD	SW 8270	
Bis(2-chloroethyl)ether	ND	280	110	ug/Kg	08/01/14	DD	SW 8270	
Bis(2-chloroisopropyl)ether	ND	280	110	ug/Kg	08/01/14	DD	SW 8270	1
Bis(2-ethylhexyl)phthalate	ND	280	120	ug/Kg	08/01/14	DD	SW 8270	

Project ID: 526 UNION AVE., BROOKLYN
Client ID: B4 8-10

Phoenix I.D.: BG85532

Parameter	Result	RL/ PQL	LOD/ MDL	Units	Date/Time	By	Reference
Carbazole	ND	2000	300	ug/Kg	08/01/14	DD	SW 8270
Chrysene	ND	280	130	ug/Kg	08/01/14	DD	SW 8270
Dibenz(a,h)anthracene	ND	280	130	ug/Kg	08/01/14	DD	SW 8270
Dibenzofuran	ND	280	120	ug/Kg	08/01/14	DD	SW 8270
Diethyl phthalate	ND	280	130	ug/Kg	08/01/14	DD	SW 8270
Dimethylphthalate	ND	280	120	ug/Kg	08/01/14	DD	SW 8270
Di-n-butylphthalate	ND	280	110	ug/Kg	08/01/14	DD	SW 8270
Di-n-octylphthalate	ND	280	100	ug/Kg	08/01/14	DD	SW 8270
Fluoranthene	ND	280	130	ug/Kg	08/01/14	DD	SW 8270
Fluorene	ND	280	130	ug/Kg	08/01/14	DD	SW 8270
Hexachlorobenzene	ND	280	120	ug/Kg	08/01/14	DD	SW 8270
Hexachlorobutadiene	ND	280	140	ug/Kg	08/01/14	DD	SW 8270
Hexachlorocyclopentadiene	ND	280	120	ug/Kg	08/01/14	DD	SW 8270
Hexachloroethane	ND	280	120	ug/Kg	08/01/14	DD	SW 8270
Indeno(1,2,3-cd)pyrene	ND	280	130	ug/Kg	08/01/14	DD	SW 8270
Isophorone	ND	280	110	ug/Kg	08/01/14	DD	SW 8270
Naphthalene	ND	280	120	ug/Kg	08/01/14	DD	SW 8270
Nitrobenzene	ND	280	140	ug/Kg	08/01/14	DD	SW 8270
N-Nitrosodimethylamine	ND	280	110	ug/Kg	08/01/14	DD	SW 8270
N-Nitrosodi-n-propylamine	ND	280	130	ug/Kg	08/01/14	DD	SW 8270
N-Nitrosodiphenylamine	ND	280	150	ug/Kg	08/01/14	DD	SW 8270
Pentachloronitrobenzene	ND	280	150	ug/Kg	08/01/14	DD	SW 8270
Pentachlorophenol	ND	280	150	ug/Kg	08/01/14	DD	SW 8270
Phenanthrene	ND	280	110	ug/Kg	08/01/14	DD	SW 8270
Phenol	ND	280	130	ug/Kg	08/01/14	DD	SW 8270
Pyrene	ND	280	140	ug/Kg	08/01/14	DD	SW 8270
Pyridine	ND	280	98	ug/Kg	08/01/14	DD	SW 8270
QA/QC Surrogates							
% 2,4,6-Tribromophenol	77			%	08/01/14	DD	30 - 130 %
% 2-Fluorobiphenyl	66			%	08/01/14	DD	30 - 130 %
% 2-Fluorophenol	67			%	08/01/14	DD	30 - 130 %
% Nitrobenzene-d5	63			%	08/01/14	DD	30 - 130 %
% Phenol-d5	72			%	08/01/14	DD	30 - 130 %
% Terphenyl-d14	93			%	08/01/14	DD	30 - 130 %

Project ID: 526 UNION AVE., BROOKLYN

Phoenix I.D.: BG85532

Client ID: B4 8-10

Parameter	Result	RL/ PQL	LOD/ MDL	Units	Date/Time	By	Reference

1 = This parameter is not certified by NY NELAC for this matrix. NY NELAC does not offer certification for all parameters at this time.

RL/PQL=Reporting/Practical Quantitation Level (Equivalent to NELAC LOQ, Limit of Quanitation) ND=Not Detected
BRL=Below Reporting Level LOD=Limit of Detection MDL=Method Detection Limit

Comments:

Per 1.4.6 of EPA method 8270D, 1,2-Diphenylhydrazine is unstable and readily converts to Azobenzene. Azobenzene is used for the calibration of 1,2-Diphenylhydrazine.

This sample was not collected in accordance with EPA method 5035. NELAC requires the laboratory to qualify the volatile soil data as biased low.

All soils, solids and sludges are reported on a dry weight basis unless otherwise noted in the sample comments.

If there are any questions regarding this data, please call Phoenix Client Services at extension 200.
This report must not be reproduced except in full as defined by the attached chain of custody.

PLEASE NOTE: THIS PROGRESS REPORT IS CONSIDERED PRELIMINARY DATA. THE RESULTS ENTERED HAVE NOT BEEN EXAMINED BY OUR QA/QC DEPARTMENT.

Phyllis Shiller, Laboratory Director
August 04, 2014

Environmental Laboratories, Inc.
587 East Middle Turnpike, P.O.Box 370, Manchester, CT 06045
Tel. (860) 645-1102 Fax (860) 645-0823

NY # 11301

Draft Progress Report

August 04, 2014

FOR: Attn: Mr. Charles B. Sosik, P.G.
Environmental Business Consultants
1808 Middle Country Rd
Ridge NY 11961-2406

Sample Information		Custody Information		Date	Time
Matrix:	SOIL	Collected by:		07/29/14	10:00
Location Code:	EBC	Received by:	LB	07/31/14	16:10
Rush Request:	72 Hour	Analyzed by:	see "By" below		
P.O.#:					

Laboratory Data

SDG ID: GBG85525
Phoenix ID: BG85533

Project ID: 526 UNION AVE., BROOKLYN
Client ID: B5 0-2

Parameter	Result	RL/ PQL	Units	Date/Time	By	Reference	
Silver	7.29	0.38	mg/Kg	08/03/14	LK	SW6010	
Aluminum	5630	38	mg/Kg	08/02/14	LK	SW6010	
Arsenic	108	0.8	mg/Kg	08/03/14	LK	SW6010	
Barium	2730	7.6	mg/Kg	08/02/14	LK	SW6010	
Beryllium	0.60	0.31	mg/Kg	08/03/14	LK	SW6010	
Calcium	8820	3.8	mg/Kg	08/03/14	LK	SW6010	
Cadmium	42.7	0.38	mg/Kg	08/03/14	LK	SW6010	
Cobalt	43.9	0.38	mg/Kg	08/03/14	LK	SW6010	
Chromium	195	3.8	mg/Kg	08/02/14	LK	SW6010	
Copper	Pending		mg/kg			SW6010	
Iron	Pending		mg/Kg			SW6010	
Mercury	16.9	3.9	mg/Kg	08/01/14	MA	SW-7471	
Potassium	502	8	mg/Kg	08/03/14	LK	SW6010	
Magnesium	2310	3.8	mg/Kg	08/03/14	LK	SW6010	
Manganese	Pending		mg/Kg			SW6010	
Sodium	290	8	mg/Kg	08/03/14	LK	SW6010	
Nickel	323	3.8	mg/Kg	08/02/14	LK	SW6010	
Lead	Pending		mg/Kg			SW6010	
Antimony	50.3	1.9	mg/Kg	08/03/14	LK	SW6010	
Selenium	< 1.5	1.5	mg/Kg	08/03/14	LK	SW6010	
TCLP Silver	< 0.10	0.10	mg/L	08/03/14	LK	SW6010	
TCLP Arsenic	< 0.10	0.10	mg/L	08/03/14	LK	SW6010	
TCLP Barium	1.55	0.10	mg/L	08/03/14	LK	SW6010	B
TCLP Cadmium	0.273	0.050	mg/L	08/03/14	LK	SW6010	
TCLP Chromium	< 0.10	0.10	mg/L	08/03/14	LK	SW6010	
TCLP Mercury	0.0005	0.0002	mg/L	08/01/14	MA	SW7470	
TCLP Lead	Pending		mg/L			SW6010	
TCLP Selenium	< 0.10	0.10	mg/L	08/03/14	LK	SW6010	

Project ID: 526 UNION AVE., BROOKLYN
Client ID: B5 0-2

Phoenix I.D.: BG85533

Parameter	Result	RL/ PQL	Units	Date/Time	By	Reference
Thallium	< 1.5	1.5	mg/Kg	08/03/14	LK	SW6010
TCLP Metals Digestion	Completed			08/01/14	I/I	SW3005
Vanadium	46.0	0.4	mg/Kg	08/03/14	LK	SW6010
Zinc	Pending		mg/Kg			SW6010
Percent Solid	85		%	07/31/14	I	E160.3
Mercury Digestion	Completed			08/01/14	I/I	SW7471
TCLP Digestion Mercury	Completed			08/01/14	I/I	E1311/7470
TCLP Extraction for Metals	Completed			07/31/14	I	EPA 1311
Total Metals Digest	Completed			07/31/14	CB/AG	SW846 - 3050

B = Present in blank, no bias suspected.

RL/PQL=Reporting/Practical Quantitation Level (Equivalent to NELAC LOQ, Limit of Quanitation) ND=Not Detected
BRL=Below Reporting Level

Comments:

Please be advised that the NY unrestricted soil criteria for chromium is based on hexavalent chromium and trivalent chromium.

All soils, solids and sludges are reported on a dry weight basis unless otherwise noted in the sample comments.

If there are any questions regarding this data, please call Phoenix Client Services at extension 200.
This report must not be reproduced except in full as defined by the attached chain of custody.

PLEASE NOTE: THIS PROGRESS REPORT IS CONSIDERED PRELIMINARY DATA. THE RESULTS ENTERED HAVE NOT BEEN EXAMINED BY OUR QA/QC DEPARTMENT.

Phyllis Shiller, Laboratory Director
August 04, 2014

PHOENIX

Environmental Laboratories, Inc.
587 East Middle Turnpike, P.O.Box 370, Manchester, CT 06045
Tel. (860) 645-1102 Fax (860) 645-0823

ACCREDITED IN ACCORDANCE WITH nelac NY # 11301

Draft Progress Report

August 04, 2014

FOR: Attn: Mr. Charles B. Sosik, P.G.
Environmental Business Consultants
1808 Middle Country Rd
Ridge NY 11961-2406

Sample Information		Custody Information		Date	Time
Matrix:	SOIL	Collected by:		07/29/14	10:20
Location Code:	EBC	Received by:	LB	07/31/14	16:10
Rush Request:	72 Hour	Analyzed by:	see "By" below		
P.O.#:					

Laboratory Data

SDG ID: GBG85525
Phoenix ID: BG85534

Project ID: 526 UNION AVE., BROOKLYN
Client ID: B5 8-10

Parameter	Result	RL/ PQL	LOD/ MDL	Units	Date/Time	By	Reference
Percent Solid	75			%	07/31/14	I	E160.3
Soil Extraction for SVOA	Completed				07/31/14	JJ/HF	SW3545
Volatiles							
1,1,1,2-Tetrachloroethane	ND	6.7	1.1	ug/Kg	08/01/14	JLI	SW8260
1,1,1-Trichloroethane	ND	6.7	1.3	ug/Kg	08/01/14	JLI	SW8260
1,1,2,2-Tetrachloroethane	ND	6.7	0.95	ug/Kg	08/01/14	JLI	SW8260
1,1,2-Trichloroethane	ND	6.7	0.65	ug/Kg	08/01/14	JLI	SW8260
1,1-Dichloroethane	ND	6.7	1.3	ug/Kg	08/01/14	JLI	SW8260
1,1-Dichloroethene	ND	6.7	1.5	ug/Kg	08/01/14	JLI	SW8260
1,1-Dichloropropene	ND	6.7	1.3	ug/Kg	08/01/14	JLI	SW8260
1,2,3-Trichlorobenzene	ND	330	67	ug/Kg	08/02/14	JLI	SW8260
1,2,3-Trichloropropane	ND	330	47	ug/Kg	08/02/14	JLI	SW8260
1,2,4-Trichlorobenzene	ND	330	67	ug/Kg	08/02/14	JLI	SW8260
1,2,4-Trimethylbenzene	ND	330	48	ug/Kg	08/02/14	JLI	SW8260
1,2-Dibromo-3-chloropropane	ND	330	89	ug/Kg	08/02/14	JLI	SW8260
1,2-Dibromoethane	ND	6.7	1.8	ug/Kg	08/01/14	JLI	SW8260
1,2-Dichlorobenzene	ND	330	37	ug/Kg	08/02/14	JLI	SW8260
1,2-Dichloroethane	ND	6.7	0.59	ug/Kg	08/01/14	JLI	SW8260
1,2-Dichloropropane	ND	6.7	0.95	ug/Kg	08/01/14	JLI	SW8260
1,3,5-Trimethylbenzene	ND	330	44	ug/Kg	08/02/14	JLI	SW8260
1,3-Dichlorobenzene	ND	330	49	ug/Kg	08/02/14	JLI	SW8260
1,3-Dichloropropane	ND	6.7	0.71	ug/Kg	08/01/14	JLI	SW8260
1,4-Dichlorobenzene	ND	330	53	ug/Kg	08/02/14	JLI	SW8260
2,2-Dichloropropane	ND	6.7	1.1	ug/Kg	08/01/14	JLI	SW8260
2-Chlorotoluene	ND	330	53	ug/Kg	08/02/14	JLI	SW8260
2-Hexanone	ND	33	3.0	ug/Kg	08/01/14	JLI	SW8260
2-Isopropyltoluene	ND	330	46	ug/Kg	08/02/14	JLI	SW8260 1

Project ID: 526 UNION AVE., BROOKLYN
Client ID: B5 8-10

Phoenix I.D.: BG85534

Parameter	Result		RL/ PQL	LOD/ MDL	Units	Date/Time	By	Reference	
4-Chlorotoluene	ND		330	39	ug/Kg	08/02/14	JLI	SW8260	
4-Methyl-2-pentanone	ND		33	1.6	ug/Kg	08/01/14	JLI	SW8260	
Acetone	64	JS	67	6.6	ug/Kg	08/01/14	JLI	SW8260	
Acrylonitrile	ND		13	3.7	ug/Kg	08/01/14	JLI	SW8260	
Benzene	ND		6.7	1.3	ug/Kg	08/01/14	JLI	SW8260	
Bromobenzene	ND		330	43	ug/Kg	08/02/14	JLI	SW8260	
Bromochloromethane	ND		6.7	0.97	ug/Kg	08/01/14	JLI	SW8260	
Bromodichloromethane	ND		6.7	0.83	ug/Kg	08/01/14	JLI	SW8260	
Bromoform	ND		6.7	0.93	ug/Kg	08/01/14	JLI	SW8260	
Bromomethane	ND		6.7	5.1	ug/Kg	08/01/14	JLI	SW8260	
Carbon Disulfide	ND		6.7	1.1	ug/Kg	08/01/14	JLI	SW8260	
Carbon tetrachloride	ND		6.7	0.77	ug/Kg	08/01/14	JLI	SW8260	
Chlorobenzene	ND		6.7	0.99	ug/Kg	08/01/14	JLI	SW8260	
Chloroethane	ND		6.7	1.6	ug/Kg	08/01/14	JLI	SW8260	
Chloroform	ND		6.7	1.2	ug/Kg	08/01/14	JLI	SW8260	
Chloromethane	ND		6.7	3.5	ug/Kg	08/01/14	JLI	SW8260	
cis-1,2-Dichloroethene	ND		6.7	1.5	ug/Kg	08/01/14	JLI	SW8260	
cis-1,3-Dichloropropene	ND		6.7	0.72	ug/Kg	08/01/14	JLI	SW8260	
Dibromochloromethane	ND		6.7	0.75	ug/Kg	08/01/14	JLI	SW8260	
Dibromomethane	ND		6.7	0.84	ug/Kg	08/01/14	JLI	SW8260	
Dichlorodifluoromethane	ND		6.7	1.8	ug/Kg	08/01/14	JLI	SW8260	
Ethylbenzene	ND		6.7	1.2	ug/Kg	08/01/14	JLI	SW8260	
Hexachlorobutadiene	ND		330	70	ug/Kg	08/02/14	JLI	SW8260	
Isopropylbenzene	ND		330	64	ug/Kg	08/02/14	JLI	SW8260	
m&p-Xylene	ND		6.7	2.6	ug/Kg	08/01/14	JLI	SW8260	
Methyl Ethyl Ketone	16	J	40	5.8	ug/Kg	08/01/14	JLI	SW8260	
Methyl t-butyl ether (MTBE)	ND		13	1.8	ug/Kg	08/01/14	JLI	SW8260	
Methylene chloride	1.8	JS	6.7	1.1	ug/Kg	08/01/14	JLI	SW8260	
Naphthalene	ND		330	89	ug/Kg	08/02/14	JLI	SW8260	
n-Butylbenzene	ND		330	61	ug/Kg	08/02/14	JLI	SW8260	
n-Propylbenzene	ND		330	60	ug/Kg	08/02/14	JLI	SW8260	
o-Xylene	ND		6.7	2.5	ug/Kg	08/01/14	JLI	SW8260	
p-Isopropyltoluene	ND		330	48	ug/Kg	08/02/14	JLI	SW8260	
sec-Butylbenzene	ND		330	63	ug/Kg	08/02/14	JLI	SW8260	
Styrene	ND		6.7	1.9	ug/Kg	08/01/14	JLI	SW8260	
tert-Butylbenzene	ND		330	53	ug/Kg	08/02/14	JLI	SW8260	
Tetrachloroethene	ND		6.7	1.4	ug/Kg	08/01/14	JLI	SW8260	
Tetrahydrofuran (THF)	ND		13	6.0	ug/Kg	08/01/14	JLI	SW8260	1
Toluene	ND		6.7	1.1	ug/Kg	08/01/14	JLI	SW8260	
trans-1,2-Dichloroethene	ND		6.7	1.3	ug/Kg	08/01/14	JLI	SW8260	
trans-1,3-Dichloropropene	ND		6.7	1.4	ug/Kg	08/01/14	JLI	SW8260	
trans-1,4-dichloro-2-butene	ND		670	620	ug/Kg	08/02/14	JLI	SW8260	
Trichloroethene	ND		6.7	1.4	ug/Kg	08/01/14	JLI	SW8260	
Trichlorofluoromethane	ND		6.7	1.5	ug/Kg	08/01/14	JLI	SW8260	
Trichlorotrifluoroethane	ND		6.7	1.0	ug/Kg	08/01/14	JLI	SW8260	
Vinyl chloride	ND		6.7	2.2	ug/Kg	08/01/14	JLI	SW8260	
QA/QC Surrogates									
% 1,2-dichlorobenzene-d4	103				%	08/02/14	JLI	70 - 130 %	
% Bromofluorobenzene	77				%	08/02/14	JLI	70 - 130 %	

Parameter	Result		RL/ PQL	LOD/ MDL	Units	Date/Time	By	Reference	
% Dibromofluoromethane	97				%	08/01/14	JLI	70 - 130 %	
% Toluene-d8	99				%	08/01/14	JLI	70 - 130 %	
Semivolatiles									
1,2,4,5-Tetrachlorobenzene	ND		300	150	ug/Kg	08/01/14	DD	SW 8270	
1,2,4-Trichlorobenzene	ND		300	130	ug/Kg	08/01/14	DD	SW 8270	
1,2-Dichlorobenzene	ND		300	120	ug/Kg	08/01/14	DD	SW 8270	
1,2-Diphenylhydrazine	ND		300	140	ug/Kg	08/01/14	DD	SW 8270	
1,3-Dichlorobenzene	ND		300	130	ug/Kg	08/01/14	DD	SW 8270	
1,4-Dichlorobenzene	ND		300	130	ug/Kg	08/01/14	DD	SW 8270	
2,4,5-Trichlorophenol	ND		300	240	ug/Kg	08/01/14	DD	SW 8270	
2,4,6-Trichlorophenol	ND		300	140	ug/Kg	08/01/14	DD	SW 8270	
2,4-Dichlorophenol	ND		300	150	ug/Kg	08/01/14	DD	SW 8270	
2,4-Dimethylphenol	ND		300	110	ug/Kg	08/01/14	DD	SW 8270	
2,4-Dinitrophenol	ND		2200	300	ug/Kg	08/01/14	DD	SW 8270	
2,4-Dinitrotoluene	ND		300	170	ug/Kg	08/01/14	DD	SW 8270	
2,6-Dinitrotoluene	ND		300	140	ug/Kg	08/01/14	DD	SW 8270	
2-Chloronaphthalene	ND		300	120	ug/Kg	08/01/14	DD	SW 8270	
2-Chlorophenol	ND		300	120	ug/Kg	08/01/14	DD	SW 8270	
2-Methylnaphthalene	ND		300	130	ug/Kg	08/01/14	DD	SW 8270	
2-Methylphenol (o-cresol)	ND		300	200	ug/Kg	08/01/14	DD	SW 8270	
2-Nitroaniline	ND		2200	440	ug/Kg	08/01/14	DD	SW 8270	
2-Nitrophenol	ND		300	270	ug/Kg	08/01/14	DD	SW 8270	
3&4-Methylphenol (m&p-cresol)	ND		300	170	ug/Kg	08/01/14	DD	SW 8270	1
3,3'-Dichlorobenzidine	ND		860	200	ug/Kg	08/01/14	DD	SW 8270	
3-Nitroaniline	ND		2200	940	ug/Kg	08/01/14	DD	SW 8270	
4,6-Dinitro-2-methylphenol	ND		2200	460	ug/Kg	08/01/14	DD	SW 8270	
4-Bromophenyl phenyl ether	ND		300	130	ug/Kg	08/01/14	DD	SW 8270	
4-Chloro-3-methylphenol	ND		300	150	ug/Kg	08/01/14	DD	SW 8270	
4-Chloroaniline	ND		860	200	ug/Kg	08/01/14	DD	SW 8270	
4-Chlorophenyl phenyl ether	ND		300	150	ug/Kg	08/01/14	DD	SW 8270	
4-Nitroaniline	ND		2200	140	ug/Kg	08/01/14	DD	SW 8270	
4-Nitrophenol	ND		2200	200	ug/Kg	08/01/14	DD	SW 8270	
Acenaphthene	160	J	300	130	ug/Kg	08/01/14	DD	SW 8270	
Acenaphthylene	ND		300	120	ug/Kg	08/01/14	DD	SW 8270	
Acetophenone	ND		300	130	ug/Kg	08/01/14	DD	SW 8270	
Aniline	ND		2200	870	ug/Kg	08/01/14	DD	SW 8270	
Anthracene	150	J	300	140	ug/Kg	08/01/14	DD	SW 8270	
Benz(a)anthracene	220	J	300	150	ug/Kg	08/01/14	DD	SW 8270	
Benzidine	ND		860	250	ug/Kg	08/01/14	DD	SW 8270	
Benzo(a)pyrene	190	J	300	140	ug/Kg	08/01/14	DD	SW 8270	
Benzo(b)fluoranthene	220	J	300	150	ug/Kg	08/01/14	DD	SW 8270	
Benzo(ghi)perylene	ND		300	140	ug/Kg	08/01/14	DD	SW 8270	
Benzo(k)fluoranthene	ND		300	140	ug/Kg	08/01/14	DD	SW 8270	
Benzoic acid	ND		2200	860	ug/Kg	08/01/14	DD	SW 8270	1
Benzyl butyl phthalate	ND		300	110	ug/Kg	08/01/14	DD	SW 8270	
Bis(2-chloroethoxy)methane	ND		300	120	ug/Kg	08/01/14	DD	SW 8270	
Bis(2-chloroethyl)ether	ND		300	120	ug/Kg	08/01/14	DD	SW 8270	
Bis(2-chloroisopropyl)ether	ND		300	120	ug/Kg	08/01/14	DD	SW 8270	1
Bis(2-ethylhexyl)phthalate	ND		300	120	ug/Kg	08/01/14	DD	SW 8270	

Project ID: 526 UNION AVE., BROOKLYN
Client ID: B5 8-10

Phoenix I.D.: BG85534

Parameter	Result		RL/ PQL	LOD/ MDL	Units	Date/Time	By	Reference
Carbazole	ND		2200	330	ug/Kg	08/01/14	DD	SW 8270
Chrysene	210	J	300	150	ug/Kg	08/01/14	DD	SW 8270
Dibenz(a,h)anthracene	ND		300	140	ug/Kg	08/01/14	DD	SW 8270
Dibenzofuran	130	J	300	130	ug/Kg	08/01/14	DD	SW 8270
Diethyl phthalate	ND		300	140	ug/Kg	08/01/14	DD	SW 8270
Dimethylphthalate	ND		300	130	ug/Kg	08/01/14	DD	SW 8270
Di-n-butylphthalate	ND		300	110	ug/Kg	08/01/14	DD	SW 8270
Di-n-octylphthalate	ND		300	110	ug/Kg	08/01/14	DD	SW 8270
Fluoranthene	630		300	140	ug/Kg	08/01/14	DD	SW 8270
Fluorene	160	J	300	140	ug/Kg	08/01/14	DD	SW 8270
Hexachlorobenzene	ND		300	130	ug/Kg	08/01/14	DD	SW 8270
Hexachlorobutadiene	ND		300	160	ug/Kg	08/01/14	DD	SW 8270
Hexachlorocyclopentadiene	ND		300	130	ug/Kg	08/01/14	DD	SW 8270
Hexachloroethane	ND		300	130	ug/Kg	08/01/14	DD	SW 8270
Indeno(1,2,3-cd)pyrene	ND		300	140	ug/Kg	08/01/14	DD	SW 8270
Isophorone	ND		300	120	ug/Kg	08/01/14	DD	SW 8270
Naphthalene	ND		300	120	ug/Kg	08/01/14	DD	SW 8270
Nitrobenzene	ND		300	150	ug/Kg	08/01/14	DD	SW 8270
N-Nitrosodimethylamine	ND		300	120	ug/Kg	08/01/14	DD	SW 8270
N-Nitrosodi-n-propylamine	ND		300	140	ug/Kg	08/01/14	DD	SW 8270
N-Nitrosodiphenylamine	ND		300	170	ug/Kg	08/01/14	DD	SW 8270
Pentachloronitrobenzene	ND		300	160	ug/Kg	08/01/14	DD	SW 8270
Pentachlorophenol	ND		300	160	ug/Kg	08/01/14	DD	SW 8270
Phenanthrene	920		300	120	ug/Kg	08/01/14	DD	SW 8270
Phenol	ND		300	140	ug/Kg	08/01/14	DD	SW 8270
Pyrene	580		300	150	ug/Kg	08/01/14	DD	SW 8270
Pyridine	ND		300	110	ug/Kg	08/01/14	DD	SW 8270
QA/QC Surrogates								
% 2,4,6-Tribromophenol	74				%	08/01/14	DD	30 - 130 %
% 2-Fluorobiphenyl	63				%	08/01/14	DD	30 - 130 %
% 2-Fluorophenol	64				%	08/01/14	DD	30 - 130 %
% Nitrobenzene-d5	65				%	08/01/14	DD	30 - 130 %
% Phenol-d5	68				%	08/01/14	DD	30 - 130 %
% Terphenyl-d14	98				%	08/01/14	DD	30 - 130 %

Project ID: 526 UNION AVE., BROOKLYN
Client ID: B5 8-10

Phoenix I.D.: BG85534

Parameter	Result	RL/ PQL	LOD/ MDL	Units	Date/Time	By	Reference

1 = This parameter is not certified by NY NELAC for this matrix. NY NELAC does not offer certification for all parameters at this time.

RL/PQL=Reporting/Practical Quantitation Level (Equivalent to NELAC LOQ, Limit of Quanitation) ND=Not Detected
BRL=Below Reporting Level LOD=Limit of Detection MDL=Method Detection Limit

Comments:

Per 1.4.6 of EPA method 8270D, 1,2-Diphenylhydrazine is unstable and readily converts to Azobenzene. Azobenzene is used for the calibration of 1,2-Diphenylhydrazine.

This sample was not collected in accordance with EPA method 5035. NELAC requires the laboratory to qualify the volatile soil data as biased low.

Volatile Comment:
There was a suppression of the last internal standard in the low level analysis, all affected compounds are reported from the methanol preserved high level analysis which did not exhibit this interference.

All soils, solids and sludges are reported on a dry weight basis unless otherwise noted in the sample comments.

If there are any questions regarding this data, please call Phoenix Client Services at extension 200.
This report must not be reproduced except in full as defined by the attached chain of custody.

PLEASE NOTE: THIS PROGRESS REPORT IS CONSIDERED PRELIMINARY DATA. THE RESULTS ENTERED HAVE NOT BEEN EXAMINED BY OUR QA/QC DEPARTMENT.

Phyllis Shiller, Laboratory Director
August 04, 2014

Environmental Laboratories, Inc.
587 East Middle Turnpike, P.O.Box 370, Manchester, CT 06045
Tel. (860) 645-1102 Fax (860) 645-0823

NY # 11301

Draft Progress Report

August 04, 2014

FOR: Attn: Mr. Charles B. Sosik, P.G.
Environmental Business Consultants
1808 Middle Country Rd
Ridge NY 11961-2406

Sample Information		Custody Information		Date	Time
Matrix:	GROUND WATER	Collected by:		07/29/14	10:30
Location Code:	EBC	Received by:	LB	07/31/14	16:10
Rush Request:	72 Hour	Analyzed by:	see "By" below		
P.O.#:					

Laboratory Data

SDG ID: GBG85525
Phoenix ID: BG85535

Project ID: 526 UNION AVE., BROOKLYN
Client ID: GW1

Parameter	Result	RL/ PQL	LOD/ MDL	Units	Date/Time	By	Reference	
Volatiles								
1,1,1,2-Tetrachloroethane	ND	1.0	0.19	ug/L	07/31/14	HM	SW8260	
1,1,1-Trichloroethane	ND	5.0	0.19	ug/L	07/31/14	HM	SW8260	
1,1,2,2-Tetrachloroethane	ND	1.0	0.15	ug/L	07/31/14	HM	SW8260	
1,1,2-Trichloroethane	ND	1.0	0.20	ug/L	07/31/14	HM	SW8260	
1,1-Dichloroethane	ND	5.0	0.23	ug/L	07/31/14	HM	SW8260	
1,1-Dichloroethene	ND	1.0	0.24	ug/L	07/31/14	HM	SW8260	
1,1-Dichloropropene	ND	1.0	0.20	ug/L	07/31/14	HM	SW8260	
1,2,3-Trichlorobenzene	ND	1.0	0.20	ug/L	07/31/14	HM	SW8260	
1,2,3-Trichloropropane	ND	1.0	0.21	ug/L	07/31/14	HM	SW8260	
1,2,4-Trichlorobenzene	ND	1.0	0.18	ug/L	07/31/14	HM	SW8260	
1,2,4-Trimethylbenzene	ND	1.0	0.18	ug/L	07/31/14	HM	SW8260	
1,2-Dibromo-3-chloropropane	ND	1.0	0.36	ug/L	07/31/14	HM	SW8260	
1,2-Dibromoethane	ND	1.0	0.20	ug/L	07/31/14	HM	SW8260	
1,2-Dichlorobenzene	ND	1.0	0.16	ug/L	07/31/14	HM	SW8260	
1,2-Dichloroethane	ND	0.60	0.20	ug/L	07/31/14	HM	SW8260	
1,2-Dichloropropane	ND	1.0	0.18	ug/L	07/31/14	HM	SW8260	
1,3,5-Trimethylbenzene	ND	1.0	0.21	ug/L	07/31/14	HM	SW8260	
1,3-Dichlorobenzene	ND	5.0	0.19	ug/L	07/31/14	HM	SW8260	
1,3-Dichloropropane	ND	1.0	0.22	ug/L	07/31/14	HM	SW8260	
1,4-Dichlorobenzene	ND	5.0	0.19	ug/L	07/31/14	HM	SW8260	
2,2-Dichloropropane	ND	1.0	0.16	ug/L	07/31/14	HM	SW8260	
2-Chlorotoluene	ND	1.0	0.23	ug/L	07/31/14	HM	SW8260	
2-Hexanone	ND	1.0	0.27	ug/L	07/31/14	HM	SW8260	
2-Isopropyltoluene	ND	1.0	0.21	ug/L	07/31/14	HM	SW8260	1
4-Chlorotoluene	ND	1.0	0.16	ug/L	07/31/14	HM	SW8260	
4-Methyl-2-pentanone	ND	1.0	0.19	ug/L	07/31/14	HM	SW8260	

Project ID: 526 UNION AVE., BROOKLYN
Client ID: GW1

Phoenix I.D.: BG85535

Parameter	Result		RL/ PQL	LOD/ MDL	Units	Date/Time	By	Reference	
Acetone	9.9	S	5.0	0.31	ug/L	07/31/14	HM	SW8260	
Acrolein	ND		5.0	0.95	ug/L	07/31/14	HM	SW8260	
Acrylonitrile	ND		5.0	0.17	ug/L	07/31/14	HM	SW8260	
Benzene	0.21	J	0.70	0.19	ug/L	07/31/14	HM	SW8260	
Bromobenzene	ND		1.0	0.20	ug/L	07/31/14	HM	SW8260	
Bromochloromethane	ND		1.0	0.22	ug/L	07/31/14	HM	SW8260	
Bromodichloromethane	ND		1.0	0.16	ug/L	07/31/14	HM	SW8260	
Bromoform	ND		5.0	0.10	ug/L	07/31/14	HM	SW8260	
Bromomethane	ND		5.0	0.50	ug/L	07/31/14	HM	SW8260	
Carbon Disulfide	ND		1.0	0.24	ug/L	07/31/14	HM	SW8260	
Carbon tetrachloride	ND		1.0	0.23	ug/L	07/31/14	HM	SW8260	
Chlorobenzene	ND		5.0	0.20	ug/L	07/31/14	HM	SW8260	
Chloroethane	ND		5.0	0.24	ug/L	07/31/14	HM	SW8260	
Chloroform	2.4	J	5.0	0.22	ug/L	07/31/14	HM	SW8260	
Chloromethane	ND		5.0	0.21	ug/L	07/31/14	HM	SW8260	
cis-1,2-Dichloroethene	ND		1.0	0.23	ug/L	07/31/14	HM	SW8260	
cis-1,3-Dichloropropene	ND		0.40	0.15	ug/L	07/31/14	HM	SW8260	
Dibromochloromethane	ND		1.0	0.15	ug/L	07/31/14	HM	SW8260	
Dibromomethane	ND		1.0	0.23	ug/L	07/31/14	HM	SW8260	
Dichlorodifluoromethane	ND		1.0	0.26	ug/L	07/31/14	HM	SW8260	
Ethylbenzene	ND		1.0	0.19	ug/L	07/31/14	HM	SW8260	
Hexachlorobutadiene	ND		1.0	0.13	ug/L	07/31/14	HM	SW8260	
Isopropylbenzene	ND		1.0	0.22	ug/L	07/31/14	HM	SW8260	
m&p-Xylene	ND		1.0	0.42	ug/L	07/31/14	HM	SW8260	
Methyl ethyl ketone	1.5		1.0	0.50	ug/L	07/31/14	HM	SW8260	
Methyl t-butyl ether (MTBE)	2.6		1.0	0.19	ug/L	07/31/14	HM	SW8260	
Methylene chloride	ND		3.0	0.16	ug/L	07/31/14	HM	SW8260	
Naphthalene	ND		1.0	0.19	ug/L	07/31/14	HM	SW8260	
n-Butylbenzene	ND		1.0	0.22	ug/L	07/31/14	HM	SW8260	
n-Propylbenzene	ND		1.0	0.20	ug/L	07/31/14	HM	SW8260	
o-Xylene	ND		1.0	0.45	ug/L	07/31/14	HM	SW8260	
p-Isopropyltoluene	ND		1.0	0.21	ug/L	07/31/14	HM	SW8260	
sec-Butylbenzene	ND		1.0	0.22	ug/L	07/31/14	HM	SW8260	
Styrene	ND		1.0	0.41	ug/L	07/31/14	HM	SW8260	
tert-Butylbenzene	ND		1.0	0.23	ug/L	07/31/14	HM	SW8260	
Tetrachloroethene	ND		1.0	0.24	ug/L	07/31/14	HM	SW8260	
Tetrahydrofuran (THF)	ND		5.0	0.51	ug/L	07/31/14	HM	SW8260	1
Toluene	ND		1.0	0.20	ug/L	07/31/14	HM	SW8260	
trans-1,2-Dichloroethene	ND		5.0	0.20	ug/L	07/31/14	HM	SW8260	
trans-1,3-Dichloropropene	ND		0.40	0.14	ug/L	07/31/14	HM	SW8260	
trans-1,4-dichloro-2-butene	ND		1.0	0.45	ug/L	07/31/14	HM	SW8260	
Trichloroethene	ND		1.0	0.18	ug/L	07/31/14	HM	SW8260	
Trichlorofluoromethane	ND		1.0	0.23	ug/L	07/31/14	HM	SW8260	
Trichlorotrifluoroethane	ND		1.0	0.23	ug/L	07/31/14	HM	SW8260	
Vinyl chloride	ND		1.0	0.14	ug/L	07/31/14	HM	SW8260	
QA/QC Surrogates									
% 1,2-dichlorobenzene-d4	98				%	07/31/14	HM	70 - 130 %	
% Bromofluorobenzene	93				%	07/31/14	HM	70 - 130 %	
% Dibromofluoromethane	103				%	07/31/14	HM	70 - 130 %	

Project ID: 526 UNION AVE., BROOKLYN
Client ID: GW1

Phoenix I.D.: BG85535

Parameter	Result	RL/ PQL	LOD/ MDL	Units	Date/Time	By	Reference
% Toluene-d8	100			%	07/31/14	HM	70 - 130 %

1 = This parameter is not certified by NY NELAC for this matrix. NY NELAC does not offer certification for all parameters at this time.

RL/PQL=Reporting/Practical Quantitation Level (Equivalent to NELAC LOQ, Limit of Quanitation) ND=Not Detected
BRL=Below Reporting Level LOD=Limit of Detection MDL=Method Detection Limit

Comments:

If there are any questions regarding this data, please call Phoenix Client Services at extension 200.
This report must not be reproduced except in full as defined by the attached chain of custody.

PLEASE NOTE: THIS PROGRESS REPORT IS CONSIDERED PRELIMINARY DATA. THE RESULTS ENTERED HAVE NOT BEEN EXAMINED BY OUR QA/QC DEPARTMENT.

Phyllis Shiller, Laboratory Director
August 04, 2014

PHOENIX

Environmental Laboratories, Inc.
587 East Middle Turnpike, P.O.Box 370, Manchester, CT 06045
Tel. (860) 645-1102 Fax (860) 645-0823

ACCREDITED IN ACCORDANCE WITH nelac NY # 11301

Draft Progress Report

August 04, 2014

FOR: Attn: Mr. Charles B. Sosik, P.G.
Environmental Business Consultants
1808 Middle Country Rd
Ridge NY 11961-2406

Sample Information		Custody Information		Date	Time
Matrix:	GROUND WATER	Collected by:		07/29/14	10:40
Location Code:	EBC	Received by:	LB	07/31/14	16:10
Rush Request:	72 Hour	Analyzed by:	see "By" below		
P.O.#:					

Laboratory Data

SDG ID: GBG85525
Phoenix ID: BG85536

Project ID: 526 UNION AVE., BROOKLYN
Client ID: GW2

Parameter	Result	RL/ PQL	LOD/ MDL	Units	Date/Time	By	Reference
Volatiles							
Volatiles	Pending			ug/L			SW8260

RL/PQL=Reporting/Practical Quantitation Level (Equivalent to NELAC LOQ, Limit of Quanitation) ND=Not Detected
BRL=Below Reporting Level LOD=Limit of Detection MDL=Method Detection Limit

Comments:

If there are any questions regarding this data, please call Phoenix Client Services at extension 200.
This report must not be reproduced except in full as defined by the attached chain of custody.

PLEASE NOTE: THIS PROGRESS REPORT IS CONSIDERED PRELIMINARY DATA. THE RESULTS ENTERED HAVE NOT BEEN EXAMINED BY OUR QA/QC DEPARTMENT.

Phyllis Shiller, Laboratory Director
August 04, 2014

PHOENIX

Environmental Laboratories, Inc.
587 East Middle Turnpike, P.O.Box 370, Manchester, CT 06045
Tel. (860) 645-1102 Fax (860) 645-0823

ACCREDITED IN ACCORDANCE WITH nelac NY # 11301

Draft Progress Report

August 04, 2014

FOR: Attn: Mr. Charles B. Sosik, P.G.
Environmental Business Consultants
1808 Middle Country Rd
Ridge NY 11961-2406

Sample Information		Custody Information		Date	Time
Matrix:	GROUND WATER	Collected by:		07/29/14	10:50
Location Code:	EBC	Received by:	LB	07/31/14	16:10
Rush Request:	72 Hour	Analyzed by:	see "By" below		
P.O.#:					

Laboratory Data

SDG ID: GBG85525
Phoenix ID: BG85537

Project ID: 526 UNION AVE., BROOKLYN
Client ID: GW3

Parameter	Result	RL/ PQL	LOD/ MDL	Units	Date/Time	By	Reference	
Volatiles								
1,1,1,2-Tetrachloroethane	ND	1.0	0.19	ug/L	08/01/14	HM	SW8260	
1,1,1-Trichloroethane	ND	5.0	0.19	ug/L	08/01/14	HM	SW8260	
1,1,2,2-Tetrachloroethane	ND	1.0	0.15	ug/L	08/01/14	HM	SW8260	
1,1,2-Trichloroethane	ND	1.0	0.20	ug/L	08/01/14	HM	SW8260	
1,1-Dichloroethane	ND	5.0	0.23	ug/L	08/01/14	HM	SW8260	
1,1-Dichloroethene	ND	1.0	0.24	ug/L	08/01/14	HM	SW8260	
1,1-Dichloropropene	ND	1.0	0.20	ug/L	08/01/14	HM	SW8260	
1,2,3-Trichlorobenzene	ND	1.0	0.20	ug/L	08/01/14	HM	SW8260	
1,2,3-Trichloropropane	ND	1.0	0.21	ug/L	08/01/14	HM	SW8260	
1,2,4-Trichlorobenzene	ND	1.0	0.18	ug/L	08/01/14	HM	SW8260	
1,2,4-Trimethylbenzene	ND	1.0	0.18	ug/L	08/01/14	HM	SW8260	
1,2-Dibromo-3-chloropropane	ND	1.0	0.36	ug/L	08/01/14	HM	SW8260	
1,2-Dibromoethane	ND	1.0	0.20	ug/L	08/01/14	HM	SW8260	
1,2-Dichlorobenzene	ND	1.0	0.16	ug/L	08/01/14	HM	SW8260	
1,2-Dichloroethane	ND	0.60	0.20	ug/L	08/01/14	HM	SW8260	
1,2-Dichloropropane	ND	1.0	0.18	ug/L	08/01/14	HM	SW8260	
1,3,5-Trimethylbenzene	ND	1.0	0.21	ug/L	08/01/14	HM	SW8260	
1,3-Dichlorobenzene	ND	5.0	0.19	ug/L	08/01/14	HM	SW8260	
1,3-Dichloropropane	ND	1.0	0.22	ug/L	08/01/14	HM	SW8260	
1,4-Dichlorobenzene	ND	5.0	0.19	ug/L	08/01/14	HM	SW8260	
2,2-Dichloropropane	ND	1.0	0.16	ug/L	08/01/14	HM	SW8260	
2-Chlorotoluene	ND	1.0	0.23	ug/L	08/01/14	HM	SW8260	
2-Hexanone	ND	1.0	0.27	ug/L	08/01/14	HM	SW8260	
2-Isopropyltoluene	ND	1.0	0.21	ug/L	08/01/14	HM	SW8260	1
4-Chlorotoluene	ND	1.0	0.16	ug/L	08/01/14	HM	SW8260	
4-Methyl-2-pentanone	ND	1.0	0.19	ug/L	08/01/14	HM	SW8260	

Project ID: 526 UNION AVE., BROOKLYN
Client ID: GW3

Phoenix I.D.: BG85537

Parameter	Result		RL/ PQL	LOD/ MDL	Units	Date/Time	By	Reference	
Acetone	9.0	S	5.0	0.31	ug/L	08/01/14	HM	SW8260	
Acrolein	ND		5.0	0.95	ug/L	08/01/14	HM	SW8260	
Acrylonitrile	ND		5.0	0.17	ug/L	08/01/14	HM	SW8260	
Benzene	ND		0.70	0.19	ug/L	08/01/14	HM	SW8260	
Bromobenzene	ND		1.0	0.20	ug/L	08/01/14	HM	SW8260	
Bromochloromethane	ND		1.0	0.22	ug/L	08/01/14	HM	SW8260	
Bromodichloromethane	ND		1.0	0.16	ug/L	08/01/14	HM	SW8260	
Bromoform	ND		5.0	0.10	ug/L	08/01/14	HM	SW8260	
Bromomethane	ND		5.0	0.50	ug/L	08/01/14	HM	SW8260	
Carbon Disulfide	0.38	J	1.0	0.24	ug/L	08/01/14	HM	SW8260	
Carbon tetrachloride	ND		1.0	0.23	ug/L	08/01/14	HM	SW8260	
Chlorobenzene	ND		5.0	0.20	ug/L	08/01/14	HM	SW8260	
Chloroethane	ND		5.0	0.24	ug/L	08/01/14	HM	SW8260	
Chloroform	ND		5.0	0.22	ug/L	08/01/14	HM	SW8260	
Chloromethane	ND		5.0	0.21	ug/L	08/01/14	HM	SW8260	
cis-1,2-Dichloroethene	ND		1.0	0.23	ug/L	08/01/14	HM	SW8260	
cis-1,3-Dichloropropene	ND		0.40	0.15	ug/L	08/01/14	HM	SW8260	
Dibromochloromethane	ND		1.0	0.15	ug/L	08/01/14	HM	SW8260	
Dibromomethane	ND		1.0	0.23	ug/L	08/01/14	HM	SW8260	
Dichlorodifluoromethane	ND		1.0	0.26	ug/L	08/01/14	HM	SW8260	
Ethylbenzene	ND		1.0	0.19	ug/L	08/01/14	HM	SW8260	
Hexachlorobutadiene	ND		1.0	0.13	ug/L	08/01/14	HM	SW8260	
Isopropylbenzene	ND		1.0	0.22	ug/L	08/01/14	HM	SW8260	
m&p-Xylene	ND		1.0	0.42	ug/L	08/01/14	HM	SW8260	
Methyl ethyl ketone	0.65	J	1.0	0.50	ug/L	08/01/14	HM	SW8260	
Methyl t-butyl ether (MTBE)	0.28	J	1.0	0.19	ug/L	08/01/14	HM	SW8260	
Methylene chloride	ND		3.0	0.16	ug/L	08/01/14	HM	SW8260	
Naphthalene	2.6		1.0	0.19	ug/L	08/01/14	HM	SW8260	
n-Butylbenzene	ND		1.0	0.22	ug/L	08/01/14	HM	SW8260	
n-Propylbenzene	ND		1.0	0.20	ug/L	08/01/14	HM	SW8260	
o-Xylene	ND		1.0	0.45	ug/L	08/01/14	HM	SW8260	
p-Isopropyltoluene	ND		1.0	0.21	ug/L	08/01/14	HM	SW8260	
sec-Butylbenzene	ND		1.0	0.22	ug/L	08/01/14	HM	SW8260	
Styrene	ND		1.0	0.41	ug/L	08/01/14	HM	SW8260	
tert-Butylbenzene	ND		1.0	0.23	ug/L	08/01/14	HM	SW8260	
Tetrachloroethene	ND		1.0	0.24	ug/L	08/01/14	HM	SW8260	
Tetrahydrofuran (THF)	ND		5.0	0.51	ug/L	08/01/14	HM	SW8260	1
Toluene	ND		1.0	0.20	ug/L	08/01/14	HM	SW8260	
trans-1,2-Dichloroethene	ND		5.0	0.20	ug/L	08/01/14	HM	SW8260	
trans-1,3-Dichloropropene	ND		0.40	0.14	ug/L	08/01/14	HM	SW8260	
trans-1,4-dichloro-2-butene	ND		1.0	0.45	ug/L	08/01/14	HM	SW8260	
Trichloroethene	ND		1.0	0.18	ug/L	08/01/14	HM	SW8260	
Trichlorofluoromethane	ND		1.0	0.23	ug/L	08/01/14	HM	SW8260	
Trichlorotrifluoroethane	ND		1.0	0.23	ug/L	08/01/14	HM	SW8260	
Vinyl chloride	ND		1.0	0.14	ug/L	08/01/14	HM	SW8260	
QA/QC Surrogates									
% 1,2-dichlorobenzene-d4	104				%	08/01/14	HM	70 - 130 %	
% Bromofluorobenzene	96				%	08/01/14	HM	70 - 130 %	
% Dibromofluoromethane	98				%	08/01/14	HM	70 - 130 %	

Project ID: 526 UNION AVE., BROOKLYN
Client ID: GW3

Phoenix I.D.: BG85537

Parameter	Result	RL/ PQL	LOD/ MDL	Units	Date/Time	By	Reference
% Toluene-d8	100			%	08/01/14	HM	70 - 130 %

1 = This parameter is not certified by NY NELAC for this matrix. NY NELAC does not offer certification for all parameters at this time.

RL/PQL=Reporting/Practical Quantitation Level (Equivalent to NELAC LOQ, Limit of Quanitation) ND=Not Detected
BRL=Below Reporting Level LOD=Limit of Detection MDL=Method Detection Limit

Comments:

If there are any questions regarding this data, please call Phoenix Client Services at extension 200.
This report must not be reproduced except in full as defined by the attached chain of custody.

PLEASE NOTE: THIS PROGRESS REPORT IS CONSIDERED PRELIMINARY DATA. THE RESULTS ENTERED HAVE NOT BEEN EXAMINED BY OUR QA/QC DEPARTMENT.

Phyllis Shiller, Laboratory Director
August 04, 2014

Sample Criteria Exceedences Report

GBG85525 - EBC

Criteria: NY: 375, 375RRS, 375RS, GW

State: NY

SampNo	Acode	Phoenix Analyte	Criteria	Result	RL	Criteria	RL Criteria	Analysis Units
BG85525	HG-SM	Mercury	NY / 375-6.8 Metals / Unrestricted Use Soil	0.27	0.07	0.18	0.18	mg/Kg
BG85525	PB-SMDP	Lead	NY / 375-6.8 Metals / Unrestricted Use Soil	108	0.7	63	63	mg/Kg
BG85526	$8260-SMDPR	Acetone	NY / 375-6.8 Volatiles / Unrestricted Use Soil	120	66	50	50	ug/Kg
BG85527	HG-SM	Mercury	NY / 375-6.8 Metals / Unrestricted Use Soil	0.53	0.06	0.18	0.18	mg/Kg
BG85527	PB-SMDP	Lead	NY / 375-6.8 Metals / Unrestricted Use Soil	166	6.6	63	63	mg/Kg
BG85527	ZN-SMDP	Zinc	NY / 375-6.8 Metals / Unrestricted Use Soil	417	6.6	109	109	mg/Kg
BG85528	$8260-SMDPR	Acetone	NY / 375-6.8 Volatiles / Unrestricted Use Soil	190	62	50	50	ug/Kg
BG85529	CR-SM	Chromium	NY / 375-6.8 Metals / Unrestricted Use Soil	33.1	0.38	30		mg/Kg
BG85529	HG-SM	Mercury	NY / 375-6.8 Metals / Residential	30.9	3.3	0.81	0.81	mg/Kg
BG85529	HG-SM	Mercury	NY / 375-6.8 Metals / Residential Restricted	30.9	3.3	0.81	0.81	mg/Kg
BG85529	HG-SM	Mercury	NY / 375-6.8 Metals / Unrestricted Use Soil	30.9	3.3	0.18	0.18	mg/Kg
BG85529	PB-SMDP	Lead	NY / 375-6.8 Metals / Unrestricted Use Soil	85.7	0.8	63	63	mg/Kg
BG85529	ZN-SMDP	Zinc	NY / 375-6.8 Metals / Unrestricted Use Soil	124	0.8	109	109	mg/Kg
BG85530	$8260-SMDPR	Acetone	NY / 375-6.8 Volatiles / Unrestricted Use Soil	110	65	50	50	ug/Kg
BG85531	CD-SM	Cadmium	NY / 375-6.8 Metals / Residential	5.42	0.35	2.5	2.5	mg/Kg
BG85531	CD-SM	Cadmium	NY / 375-6.8 Metals / Residential Restricted	5.42	0.35	4.3	4.3	mg/Kg
BG85531	CD-SM	Cadmium	NY / 375-6.8 Metals / Unrestricted Use Soil	5.42	0.35	2.5	2.5	mg/Kg
BG85531	HG-SM	Mercury	NY / 375-6.8 Metals / Unrestricted Use Soil	0.64	0.08	0.18	0.18	mg/Kg
BG85531	PB-SMDP	Lead	NY / 375-6.8 Metals / Unrestricted Use Soil	241	6.9	63	63	mg/Kg
BG85531	ZN-SMDP	Zinc	NY / 375-6.8 Metals / Unrestricted Use Soil	192	6.9	109	109	mg/Kg
BG85533	AG-SM	Silver	NY / 375-6.8 Metals / Unrestricted Use Soil	7.29	0.38	2	2	mg/Kg
BG85533	AS-SM	Arsenic	NY / 375-6.8 Metals / Residential	108	0.8	16	16	mg/Kg
BG85533	AS-SM	Arsenic	NY / 375-6.8 Metals / Residential Restricted	108	0.8	16	16	mg/Kg
BG85533	AS-SM	Arsenic	NY / 375-6.8 Metals / Unrestricted Use Soil	108	0.8	13	13	mg/Kg
BG85533	BA-SMDP	Barium	NY / 375-6.8 Metals / Residential	2730	7.6	350	350	mg/Kg
BG85533	BA-SMDP	Barium	NY / 375-6.8 Metals / Residential Restricted	2730	7.6	400	400	mg/Kg
BG85533	BA-SMDP	Barium	NY / 375-6.8 Metals / Unrestricted Use Soil	2730	7.6	350	350	mg/Kg
BG85533	CD-SM	Cadmium	NY / 375-6.8 Metals / Residential	42.7	0.38	2.5	2.5	mg/Kg
BG85533	CD-SM	Cadmium	NY / 375-6.8 Metals / Residential Restricted	42.7	0.38	4.3	4.3	mg/Kg
BG85533	CD-SM	Cadmium	NY / 375-6.8 Metals / Unrestricted Use Soil	42.7	0.38	2.5	2.5	mg/Kg
BG85533	CR-SM	Chromium	NY / 375-6.8 Metals / Unrestricted Use Soil	195	3.8	30		mg/Kg
BG85533	HG-SM	Mercury	NY / 375-6.8 Metals / Residential	16.9	3.9	0.81	0.81	mg/Kg
BG85533	HG-SM	Mercury	NY / 375-6.8 Metals / Residential Restricted	16.9	3.9	0.81	0.81	mg/Kg
BG85533	HG-SM	Mercury	NY / 375-6.8 Metals / Unrestricted Use Soil	16.9	3.9	0.18	0.18	mg/Kg
BG85533	NI-SM	Nickel	NY / 375-6.8 Metals / Residential	323	3.8	140	140	mg/Kg
BG85533	NI-SM	Nickel	NY / 375-6.8 Metals / Residential Restricted	323	3.8	310	310	mg/Kg

Sample Criteria Exceedences Report

GBG85525 - EBC

Criteria: NY: 375, 375RRS, 375RS, GW

State: NY

SampNo	Acode	Phoenix Analyte	Criteria	Result	RL	Criteria	RL Criteria	Analysis Units
BG85533	NI-SM	Nickel	NY / 375-6.8 Metals / Unrestricted Use Soil	323	3.8	30	30	mg/Kg
BG85534	$8260-SMDPR	Acetone	NY / 375-6.8 Volatiles / Unrestricted Use Soil	64	67	50	50	ug/Kg
BG85535	$8260DP25R	1,2,3-Trichloropropane	NY / TOGS - Water Quality / GA Criteria	ND	1.0	0.04	0.04	ug/L
BG85535	$8260DP25R	1,2-Dibromo-3-chloropropane	NY / TOGS - Water Quality / GA Criteria	ND	1.0	0.04	0.04	ug/L
BG85535	$8260DP25R	1,2-Dibromoethane	NY / TOGS - Water Quality / GA Criteria	ND	1.0	0.0006	0.0006	ug/L
BG85535	$8260DP25R	1,3-Dichlorobenzene	NY / TOGS - Water Quality / GA Criteria	ND	5.0	3	3	ug/L
BG85535	$8260DP25R	Hexachlorobutadiene	NY / TOGS - Water Quality / GA Criteria	ND	1.0	0.5	0.5	ug/L
BG85537	$8260DP25R	Hexachlorobutadiene	NY / TOGS - Water Quality / GA Criteria	ND	1.0	0.5	0.5	ug/L
BG85537	$8260DP25R	1,2,3-Trichloropropane	NY / TOGS - Water Quality / GA Criteria	ND	1.0	0.04	0.04	ug/L
BG85537	$8260DP25R	1,2-Dibromo-3-chloropropane	NY / TOGS - Water Quality / GA Criteria	ND	1.0	0.04	0.04	ug/L
BG85537	$8260DP25R	1,2-Dibromoethane	NY / TOGS - Water Quality / GA Criteria	ND	1.0	0.0006	0.0006	ug/L
BG85537	$8260DP25R	1,3-Dichlorobenzene	NY / TOGS - Water Quality / GA Criteria	ND	5.0	3	3	ug/L

Phoenix Laboratories does not assume responsibility for the data contained in this report. It is provided as an additional tool to identify requested criteria exceedences. All efforts are made to ensure the accuracy of the data (obtained from appropriate agencies). A lack of exceedence information does not necessarily suggest conformance to the criteria. It is ultimately the site professional's responsibility to determine appropriate compliance.

Cooler: Yes ☐ No ☐
Coolant: WPK ☑ ICE ☐ No ☐
Temp °C Pg 1 of 2

PHOENIX Environmental Laboratories, Inc.

NY/NJ CHAIN OF CUSTODY RECORD

587 East Middle Turnpike, P.O. Box 370, Manchester, CT 06040
Email: info@phoenixlabs.com Fax (860) 645-0823
Client Services (860) 645-8726

Contact Options:
☐ Fax:
☐ Phone:
☑ Email: Kile

Customer: EBC
Address: Ridge NJ

Project: 526 Union Ave Brooklyn NY
Report to:
Invoice to:

Project P.O:

This section MUST be completed with Bottle Quantities.

Sampler's Signature: [signature] Date: 7-29-14

Client Sample Information - Identification

Matrix Code:
DW=Drinking Water **GW**=Ground Water **SW**=Surface Water **WW**=Waste Water
RW=Raw Water **SE**=Sediment **SL**=Sludge **S**=Soil **SD**=Solid **W**=Wipe
OIL=Oil **B**=Bulk **L**=Liquid

Analysis Request

PHOENIX USE ONLY SAMPLE #	Customer Sample Identification	Sample Matrix	Date Sampled	Time Sampled	VOC 8260	SVOC 8270	TAL Metals	TCLP Metals	4 oz Soil	Soil VOA Vials [ ] methanol [ ] H2O	GL Soil container (2) oz	GL Soil container (1) oz	40 ml VOA Vial [ ] As is [ ] HCl	GL Amber 1000ml [ ] As is [ ] H2SO4	PL As is [ ] 250ml [ ] 500ml [ ] 1000ml	PL H2SO4 [ ] 250ml [ ] 500ml	PL HNO3 250ml	PL NaOH 250ml	Bacteria Bottle
85525	B1 0-2	S	7-29	720			X	X				1							
85526	B1 8-10			740	X	X					1	1							
85527	B2 3-5			800			X	X				1							
85528	B2 8-10			820	X	X					1	1							
85529	B3 0-2			840			X	X	2										
85530	B3 8-10			900	X	X			2		1								
85531	B4 2-4			920			X	X				1							
85532	B4 8-10			940	X	X					1	1							
85533	B5 0-2			1000			X	X				1							
85534	B5 8-10			1020	X	X					1	1							
85535	GW1	GW		1030	X								3						

Relinquished by:	Accepted by:	Date:	Time:
[signature]	[signature]	7-31-14	11:15
[signature]	[signature]	7-31-14	1610

Comments, Special Requirements or Regulations:

Turnaround:
☐ 1 Day*
☐ 2 Days*
☐ 3 Days*
☑ 5 Days
☐ 10 Days
☐ Other
* SURCHARGE APPLIES

NJ
☐ Res. Criteria
☐ Non-Res. Criteria
☐ Impact to GW Soil Cleanup Criteria
☐ GW Criteria

NY
☑ TAGM 4046 GW
☐ TAGM 4046 SOIL
☑ NY375 Unrestricted Use Soil
☑ NY375 Residential Soil
☑ Restricted/Residential
☐ Commercial
☐ Industrial

Data Format
☐ Phoenix Std Report
☑ Excel
☑ PDF
☐ GIS/Key
☐ EQuIS
☐ NJ Hazsite EDD
☐ NY EZ EDD (ASP)
☐ Other

Data Package
☐ NJ Reduced Deliv. *
☐ NY Enhanced (ASP B) *
☐ Other

State where samples were collected: NY

Cooler: Yes [ ] No [ ]
Coolant: IPK [ ] ICE [ ] No [ ]
Temp 0 °C Pg 2 of 2

PHOENIX
Environmental Laboratories, Inc.

NY/NJ CHAIN OF CUSTODY RECORD

587 East Middle Turnpike, P.O. Box 370, Manchester, CT 06040
Email: info@phoenixlabs.com Fax (860) 645-0823
Client Services (860) 645-8726

Contact Options:
[ ] Fax:
[ ] Phone:
[x] Email: file

Customer: EBC
Address: Ridge NJ

Project: 526 Union Ave Bklyn NY
Report to:
Invoice to:

Project P.O:

This section MUST be completed with Bottle Quantities.

Client Sample - Information - Identification

Sampler's Signature: [signature] Date: 7.29.14

Matrix Code:
DW=Drinking Water **GW**=Ground Water **SW**=Surface Water **WW**=Waste Water
RW=Raw Water **SE**=Sediment **SL**=Sludge **S**=Soil **SD**=Solid **W**=Wipe
OIL=Oil **B**=Bulk **L**=Liquid

Analysis Request

PHOENIX USE ONLY SAMPLE #	Customer Sample Identification	Sample Matrix	Date Sampled	Time Sampled	VOC 8260	Soil VOA Vials [ ] methanol [ ] H2O	GL Soil container ( ) oz	GL Soil container ( ) oz	40 ml VOA Vial [x] As is [ ] HCl	GL Amber 1000ml [ ] As is [ ] H2SO4	PL As is [ ] 250ml [ ] 500ml [ ] 1000ml	PL H2SO4 [ ] 250ml [ ] 500ml	PL HNO3 250ml	PL NaOH 250ml	Bacteria Bottle
85536	gw 2	gw	7.29	1040	x				3						
85537	gw 3	gw	↓	1050	x				3						

Relinquished by:	Accepted by:	Date:	Time:
[signature]	[signature]	7-31-14	11:15
	[signature]	7-31-14	1610

Comments, Special Requirements or Regulations:

Turnaround:
[ ] 1 Day*
[ ] 2 Days*
[ ] 3 Days*
[x] 5 Days
[ ] 10 Days
[ ] Other
* SURCHARGE APPLIES

NJ
[ ] Res. Criteria
[ ] Non-Res. Criteria
[ ] Impact to GW Soil Cleanup Criteria
[ ] GW Criteria

NY
[x] TAGM 4046 GW
[ ] TAGM 4046 SOIL
[ ] NY375 Unrestricted Use Soil
[ ] NY375 Residential Soil
[ ] Restricted/Residential
[ ] Commercial
[ ] Industrial

Data Format
[ ] Phoenix Std Report
[x] Excel
[x] PDF
[ ] GIS/Key
[ ] EQuIS
[ ] NJ Hazsite EDD
[ ] NY EZ EDD (ASP)
[ ] Other

Data Package
[ ] NJ Reduced Deliv. *
[ ] NY Enhanced (ASP B) *
[ ] Other

State where samples were collected: NJ