526 UNION AVENUE

BROOKLYN, NEW YORK

Remedial Action Work Plan

NYC VCP Project Number 16CVCP048K
OER Project Number 16EHAZ063K

Prepared For:

Mr. Adam Westreich

Tryad Group

250 Greenpoint Avenue, Suite #4

Brooklyn, New York, 11222

(718) 308-0008

Prepared By:

Creative Environment Solutions, Inc.

39 West 37th Street, 14th Floor

MRattacasa@cescenter.com

212-290-6323

DECEMBER 14, 2015

REMEDIAL ACTION WORK PLAN

FIGURES

Figure 1: Site Location Map

Figure 2: Location of Engineering Controls

Figure 3: Location of Proposed Endpoint Samples

Figure 4: Composite Cover Locations

Figure 5: Proposed SSDS Piping Location

APPENDICES

Appendix 1: Proposed Development Plans

Appendix 2: Citizens Participation Plan

Appendix 3: Statement of Sustainability

Appendix 4: Soil/Materials Management Plan

Appendix 5: Construction Health & Safety Plan

Appendix 6: Soil Vapor Barrier Specifications

Appendix 7 : Previous Environmental Reports

LIST OF ACRONYMS

Acronym	Definition
AOC	Area of Concern
AS/SVE	Air Sparging/Soil Vapor Extraction
BOA	Brownfield Opportunity Area
CAMP	Community Air Monitoring Plan
C&D	Construction and Demolition
CEQR	City Environmental Quality Review
CFR	Code of Federal Regulations
CHASP	Construction Health and Safety Plan
COC	Certificate of Completion
CQAP	Construction Quality Assurance Plan
CSOP	Contractors Site Operation Plan
DCR	Declaration of Covenants and Restrictions
ECs/ICs	Engineering Controls and Institutional Controls
ELAP	Environmental Laboratory Accreditation Program
HASP	Health and Safety Plan
HAZWOPER	Hazardous Waste Operations Emergency Response
IRM	Interim Remedial Measure
MNA	Monitored Natural Attenuation
NOC	Notice of Completion
NYS DEC	New York State Department of Environmental Conservation
NYC DEP	New York City Department of Environmental Protection
NYC DOHMH	New York State Department of Health and Mental Hygiene
NYC OER	New York City Office of Environmental Remediation
NYC VCP	New York City Voluntary Cleanup Program
NYCRR	New York Codes Rules and Regulations
NYS DEC	New York State Department of Environmental Conservation
NYS DEC DER	New York State Department of Environmental Conservation Division of

	Environmental Remediation
NYS DOH	New York State Department of Health
NYS DOT	New York State Department of Transportation
ORC	Oxygen-Release Compound
OSHA	United States Occupational Health and Safety Administration
PCBs	Polychlorinated Biphenyls
PE	Professional Engineer
PID	Photo Ionization Detector
QEP	Qualified Environmental Professional
QHHEA	Qualitative Human Health Exposure Assessment
RAOs	Remedial Action Objectives
RAR	Remedial Action Report
RAWP	Remedial Action Work Plan or Plan
RCA	Recycled Concrete Aggregate
RD	Remedial Design
RI	Remedial Investigation
RMZ	Residual Management Zone
SCOs	Soil Cleanup Objectives
SCG	Standards, Criteria and Guidance
SMP	Site Management Plan
SPDES	State Pollutant Discharge Elimination System
SSDS	Sub-Slab Depressurization System
SVOC	Semi-Volatile Organic Compound
TAL	Target Analyte List
TCL	Target Compound List
USGS	United States Geological Survey
UST	Underground Storage Tank
VCA	Voluntary Cleanup Agreement
VOC	Volatile Organic Compound

CERTIFICATION

I, Craig Puerta, PE, am currently a registered professional engineer licensed by the State of New York. I performed professional engineering services and had primary direct responsibility for designing the remedial program for the 526 Union Avenue, Brooklyn, New York site, site number 16EHAZ063K & 16CVCP048K. I certify to the following:

- I have reviewed this document, to which my signature and seal are affixed.
- Engineering Controls developed for this remedial action were designed by me or a person under my direct supervision and designed to achieve the goals established in this Remedial Action Work Plan for this site.
- The Engineering Controls to be constructed during this remedial action are accurately reflected in the text and drawings of the Remedial Action Work Plan and are of sufficient detail to enable proper construction.
- This Remedial Action Work Plan (RAWP) has a plan for handling, transport and disposal of soil, fill, fluids and other materials removed from the property in accordance with applicable City, State and Federal laws and regulations. Importation of all soil, fill and other material from off-Site will be in accordance with all applicable City, State and Federal laws and requirements. This RAWP has provisions to control nuisances during the remediation and all invasive work, including dust and odor suppression.

CRAIG PUERTA, PE
Name

087830
PE License Number

Signature

12/14/15
Date

I, Michael Rattacasa, am a qualified Environmental Professional. I have primary direct responsibility for implementation of the remedial program for the 526 Union Avenue, Brooklyn, New York site, site 16EHAZ063K & 16CVCP048K. I certify to the following:

- This Remedial Action Work Plan (RAWP) has a plan for handling, transport and disposal of soil, fill, fluids and other materials removed from the property in accordance with applicable City, State and Federal laws and regulations. Importation of all soil, fill and other material from off-Site will be in accordance with all applicable City, State and Federal laws and requirements. This RAWP has provisions to control nuisances during the remediation and all invasive work, including dust and odor suppression.

MICHAEL RATTACASA
QEP Name

QEP Signature

12/14/15
Date

EXECUTIVE SUMMARY

Tryad Group is working with the NYC Office of Environmental Remediation (OER) in the New York City Voluntary Cleanup Program to investigate and remediate a 10,000-square foot site located at 526 Union Avenue in Brooklyn, New York. A remedial investigation (RI) was performed to compile and evaluate data and information necessary to develop this Remedial Action Work Plan (RAWP) including a Phase II Subsurface Investigation (Phase II) previously performed by EBC, Inc. in 2014 and a Remedial Investigation performed by Creative Environment Solutions Corp. (CES) in November, 2015. The remedial action described in this document provides for the protection of public health and the environment consistent with the intended property use, complies with applicable environmental standards, criteria and guidance and conforms with applicable laws and regulations.

Site Location and Background

The Site is located in the Williamsburg-Greenpoint neighborhood of Brooklyn, New York and is identified as Block number 2741, Lot 3 on the New York City Tax Map. Figure One is a Site location map. The Site is bounded by Withers Street to the north, Jackson Street to the south, Meeker Avenue to the east, and Union Avenue to the west. Currently, the Site is vacant with no tenants and/or structures at the site.

Summary of Redevelopment Plan

The proposed development at the Site will involve the construction of a six (6) story concrete block structure with the roof for mechanical infrastructure. No basement is proposed; however, construction below grade surface will be performed for foundation piles, pile caps, elevator pit and stairwell. The total depth of construction is anticipated to be no deeper than five feet (5') below existing grade surface. The lot is approximately 10,000 square feet with 6,500 square feet for new building construction and approximately 3,500 square feet for accessory vehicle parking. Groundwater was identified at a depth of eight (8) to ten (10) feet bgs at this Site. A total of twenty-five (25) to thirty (30) new units are proposed for residential application.

Layout of the proposed site development is presented in Appendix 1. The current zoning designation is M1-2/R6A. The remedial action contemplated under this RAWP may be implemented independently of the proposed redevelopment plan.

Summary of Surrounding Property

The Site is located in the Williamsburg-Greenpoint neighborhood of Brooklyn, New York. The neighborhood is characterized by mixed use residential and commercial applications including light industrial application such as metal fabrication and automotive services. Many structures in this neighborhood are abandoned or do not currently have active tenants, although newer residential developments are occurring within a walkable distance of this Site. No schools, day care facilities, or hospitals are located within a 500-foot radius of the Site.

Summary of Past Site Uses and Areas of Concern

Historically, the Site was undeveloped as of the earliest known Sanborn record map in 1887. Circa 1905 the Site was used as a barrel storage yard. From 1916-2007 the Site was used as a junk yard. The junk yard ceased operations at an unknown date after 2007. The owner informed CES that the Site was used as a parking lot since 2007 but this operation has since ceased. No items of specific environmental concern; for example, underground storage tanks, hazardous materials storage/usage were identified from the historical review.

A previous Phase II subsurface investigation was performed by EBC Consultants, Inc. in August 2014 for the purposes of investigating the site with the known "E" designation. EBC performed five soil borings and three groundwater probes and samples. Soil samples were compared by EBC Consultants, Inc. to Unrestricted Use and Restricted Residential Use Soil Cleanup Objectives (SCOs) in NYSDEC CP-51.

EBC Consultants, Inc. concluded that, with the exception of acetone, which a common laboratory contaminant, no VOCs or SVOCs detected above Unrestricted Use were identified in the samples collected.

EBC Consultants, Inc. concluded that the metals arsenic, barium cadmium, chromium, lead, mercury, nickel, silver, and zinc were detected above Unrestricted or Restricted Residential SCOs and that the detections were indicative of typical concentrations of metals observed in NYC soils.

EBC Consultants, Inc. concluded that the groundwater results indicated several minor detections of VOCs in all three samples and that none were above NYSDEC TOGS criteria. The detections, according to EBC Consultants, Inc. were indicative of poor quality non potable water common in NYC and is not indicative of any type or groundwater source of contamination.

Three areas of concern identified during the remedial investigations as SB-2 (to 7-feet bgs), SB-6 (to 8-feet bgs), and B-5 (to 2-feet bgs (EBC Report)) will be excavated and disposed off-site during the remedial action. These AOC's are attributed to the presence of SVOCs and metals in soil as identified in the Track 4 SCO requirements. Collection and analysis of end-

point samples at the three areas of concern will be completed to determine the performance of the remedy with respect to attainment of SCOs.

Summary of Work Performed under the Remedial Investigation

In November 2015, CES conducted a New York City Office of Environmental Remediation (OER)-approved Remedial Investigation. In accordance with the Remedial Investigation, CES completed the following scope of work:

1. Installation of six (6) soil borings across the entire project Site, and collection of 13 soil samples for chemical analysis from the soil borings to evaluate soil quality;
2. Three (3) groundwater samples were collected for chemical analysis in general accordance with low-flow groundwater sampling procedures, to evaluate groundwater quality beneath the site. Groundwater samples were collected from 1-inch diameter permanent monitoring wells advanced with direct push geoprobe technology;
3. Installation of four (4) soil vapor probes were installed around Site perimeter for collection of 4 soil vapor samples for chemical analysis. The locations of the soil vapor probes were approximately 15' from adjacent property boundaries.

Summary of Findings of Remedial Investigation

A remedial investigation was performed and the results are documented in a companion document called "Remedial Investigation Report, 526 Union Avenue, Brooklyn, New York", dated December 11, 2015 (RIR). The results of the Remedial Investigation suggested the following:

1. Surface elevation of the property ranges from approximately 10 to 11 feet above sea level, with very slight variations across the Site footprint.
2. Groundwater surface levels were observed at the Site ranging from 7.53 feet below ground surface (bgs) in the eastern monitoring well (MW-SB-6) to 6.86 feet-bgs (MW-SB-1) and 7.03 feet-bgs (MW-SB-2) in the western monitoring wells.

3. Given the relative size of the site, it can be difficult to accurately depict groundwater flow direction given subsurface interferences. CES can reasonably conclude based upon groundwater surface level observations, measurements taken using laser levels and from landmarks that groundwater flow is generally northwesterly beneath the Site towards the East River.

4. The stratigraphy of the site, from the surface down, consists of a compacted surface layer of non-native recycled concrete aggregate (RCA) to approximately 0.25 feet-bgs, consisting fine to medium crushed gravel and stone, brick fragments, metal fragments, asphalt fragments, fine to coarse sand, and silt. Immediately underlying the RCA layer to approximately 5 feet-bgs is urban fill material, as evidenced by varying fractions of brick fragments, metal fragments, and wood fragments mixed with fine to medium sand, fine to medium gravel, and trace fractions of silt. Immediately underlying the historic fill layer to the terminal depth of the Supplemental SSI (15 feet bgs) was a mixture of fine to coarse sand, fine to medium gravel, clay, and silt. A fibrous organic native peat layer or marsh mat was observed from approximately 12 feet to 15 feet bgs in the southeastern-most boring (SB-1).

    1. Soil boring sample results for both the August 2014 EBC Investigation and the November 2015 CES Investigation were compared to NYSDEC Unrestricted Use Soil Cleanup Objectives (UUSCOs) and Restricted Residential Use Soil Cleanup Standards (RRSCOs) as presented in 6NYCRR Part 375-6.8. See Figure 5 and 6 for a summary of CES soil analytical and Appendix E for Historic Environmental Reports, including the August 2014 EBC Investigation. A summary of results from both investigations is as follows.

- One VOC, Acetone (a common laboratory contaminant) during the EBC Investigation was detected above its UUSCO (maximum of 190 µg/kg) (EBC).

- One PCB, PCB 1254 was detected in one shallow soil sample SB-3 (0'-5') at 170 µg/kg, above UUSCOs (CES). The laboratory did also identify matrix spike and diluted detections of PCBs in samples SB-1(0'-2'), SB-2(0'-2'), SB-6 (0'-2'). The dilutions performed by the laboratory were up to 20x normal limits for the testing equipment. CES in discussion with the laboratory confirmed the probable presence

of low level PCBs in these samples. The exact concentration could not be estimated by the laboratory.

- Several SVOCs including benz(a)anthracene (max of 4,100 µg/kg), benzo(a)pyrene (max of 3,600 µg/kg), benzo(b)fluoranthene (max of 3,900 µg/kg), benzo(k)fluoranthene (max of 2,600 µg/kg), chrysene (max of 4,400 µg/kg), dibenzo(a,h)anthracene (4,500 µg/kg), and indeno(1,2,3-cd)pyrene (max of 1,900 µg/kg) were detected above UUSCOs and RRSCOs in 4 of the 6 shallow samples (CES).

- Two pesticides 4,4'-DDD (43 µg/kg) and 4,4'-DDT (61 µg/kg) were detected above UUSCOs in shallow soil sample SB-6 (0'-2') (CES).

- Several metals including arsenic (EBC) (max of 108 mg/kg), barium (EBC) (max of 2.730 mg/kg), cadmium (EBC) (max of 42.7 mg/kg), chromium (CES) (max of 224 mg/kg), copper (CES) (max of 1160 mg/kg), lead (CES) (max of 5,540 mg/kg), mercury (EBC) (max of 30.9mg/kg), nickel (EBC) (max of 323 mg/kg), silver (EBC) (max of 7.29 mg/kg) and zinc (CES) (max of 5710 mg/kg) were detected above UUSCOs in all soil samples except for SB-4 (5'-7'). Of these, all exceeded RRSCOs with the exception of silver. Metals in SB-6 (2'-4') exceeded UUSCOs but did not exceed RRSCOs. Highest concentrations of metals were consistently detected in shallow sample SB-1 (0'-2') (CES) in the southwestern-most area of the Site adjacent to the sidewalk area.

- Overall, the soil results were consistent with data identified at sites with historic fill material in NYC.

2. CES Groundwater samples results were compared to New York State 6NYCRR Part 703.5 Class GA groundwater quality standards (GQS). See Figure 7 for a summary of groundwater analytical.

   - Groundwater samples did not exhibit concentrations of VOCs, PCBs, or Pesticides above GQS.

- SVOCs including Benzo (a) anthracene (max of 0.4 µg/L), Benzo (a) pyrene (max of 0.35 µg/L), Benzo (b) fluoranthene (max of 0.32 µg/L), Benzo (k) fluoranthene (max of 0.27 µg/L), Chrysene (max of 0.38 µg/L), and Indeno (1,2,3-cd) pyrene (max of 0.16µg/L) were detected above GQS in groundwater beneath the site.
- Dissolved metals including Aluminum (max of 0.187 mg/L), Iron (max of 1.28 mg/L), Manganese (max of 2.01 mg/L), and Sodium (max of 32.2 mg/L) were detected above GQS in groundwater beneath the site.
- The detections are indicative of poor quality non potable water common in NYC and is not indicative of any type or groundwater source of contamination.

3. CES Soil vapor results collected during the Subsurface Investigation were compared to the compounds listed in the Indoor Air Guidance Values and the Vapor Intrusion Matrices 1 and 2 detailed in the New York State Department of Health (NYSDOH) Final Guidance for Evaluating Soil Vapor Intrusion, dated October 2006. 1,1,1-TCA was detected in two of four samples at a maximum concentration of 12.3 $\mu g/m^3$. PCE was detected in all four samples at a maximum concentration of 55.9 $\mu g/m^3$. TCE was detected in one sample at 4.23 $\mu g/m^3$. Total BTEX concentrations ranged from 2.84 $\mu g/m^3$ (CES-1) to 41.77 $\mu g/m^3$ (CES-2).

Summary of the Remedial Action

The proposed remedial action achieves protection of public health and the environment for the intended use of the property. The proposed remedial action achieves all of the remedial action objectives established for the project and addresses applicable standards, criterion, and guidance; is effective in both the short-term and long-term and reduces mobility, toxicity and volume of contaminants; is cost effective and implementable; and uses standard methods that are well established in the industry.

The proposed remedial action will consist of:

1. Preparation of a Community Protection Statement and performance of all required NYC VCP Citizen Participation activities according to an approved Citizen Participation Plan.

2. Performance of a Community Air Monitoring Program for particulates and volatile organic carbon compounds.

3. Establishment of Track 4 Site-specific Soil Cleanup Objectives (SCOs).

4. Site mobilization involving Site security setup, equipment mobilization, utility mark outs and marking & staking excavation areas.

5. Completion of a Waste Characterization Study prior to excavation activities. Waste characterization soil samples will be collected at a frequency dictated by disposal facility(s).

6. Excavation and removal of soils to achieve Track 4 Site Specific SCOs. For development purposes, soils will be excavated to approximately five feet (5') below existing grade surface for foundation piles, pile caps, elevator pit and stairwell. In addition, three areas of concern (hotspots) identified in the Remedial Investigation as SB-2 (to 7-feet bgs), SB-6 (to 8-feet bgs), and B-5 (to 2-feet bgs (EBC Report)) will be excavated and disposed off-site during the remedial action. The final volume and dimensions will be determined during construction of waste class sampling. Approximately, 1000 tons of soil will be excavated and removed from this Site.

7. Screening of excavated soil/fill during intrusive work for indications of contamination by visual means, odor, and monitoring with a PID. Appropriate segregation of excavated media on-Site.

8. Management of excavated materials including temporarily stockpiling and segregating in accordance with defined material types and to prevent co-mingling of contaminated material and non-contaminated materials.

9. Removal of underground storage tanks (if encountered) and closure of petroleum spills (if encountered) in compliance with applicable local, State and Federal laws and

regulations. Registration of tanks and reporting of any petroleum spills associated with UST's and appropriate closure of these petroleum spills, if applicable, will be conducted in compliance with applicable local, State and Federal laws and regulations.

10. Transportation and off-Site disposal of all soil/fill material at licensed or permitted facilities in accordance with applicable laws and regulations for handling, transport, and disposal, and this plan. Sampling and analysis of excavated media as required by disposal facilities. Appropriate segregation of excavated media on-Site.

11. Collection and analysis of end-point samples at the three Hotspot areas. In addition, one end point sample will be collected at the bottom of the elevator pit and stairwell respectively, and four additional end-point samples will be collected beneath the general footprint of the building. One end-point sample will be collected beneath the excavation for the parking lot.

12. Import of materials to be used for backfill and cover in compliance with this plan and in accordance with applicable laws and regulations.

13. Construction of an engineered composite cover consisting of building slabs (at least 4-inches thick) and a two-foot clean soil fill cover with asphalt cover in the parking area to prevent human exposure to residual soil/fill remaining under the Site.

14. Installation of demarcation layer in landscaped areas.

15. Installation of a vapor barrier system consisting of a vapor barrier beneath the building slab and outside of sub-grade foundation sidewalls to mitigate soil vapor migration into the building. The vapor barrier system will consist of a 20-mil Raven Industries' Vapor Block Plus vapor barrier (or equivalent) below the slab throughout the full building area and a 20-mil Raven Industries' Vapor Block Plus vapor barrier (or equivalent) outside all sub-grade foundation sidewalls. All welds, seams and penetrations will be properly sealed to prevent preferential pathways for vapor migration. The vapor barrier system is an Engineering Control for the remedial

action. The remedial engineer will certify in the RAR that the vapor barrier system was designed and properly installed to mitigate soil vapor migration into the building.

16. Installation of a passive sub-slab depressurization system (SSDS) designed to maintain negative pressure beneath the entire area of the building slab addressed by this RAP. The Remedial Closure Report will include photographs of the installation of SSDS laterals as well as if any deviations have occurred due to construction scope changes. The Remedial Closure Report will include PE/RA certified as-built plans depicting SSDS lateral, and riser pipe configuration and locations, as well as documentation proving that the active SSDS was appropriately designed to maintain negative pressure beneath the entire area of the building slab. The passive SSDS system will consist of a network of horizontal pipes set in the middle of a gas permeable layer immediately beneath the building slab and vapor barrier system. The horizontal piping will consist of fabric wrapped, perforated schedule forty 40 4-inch PVC pipes connected to a 4 or 6-inch steel riser pipe that penetrates the slab and travels through the building to the roof. The gas permeable layer will consistent of a 6-inch thick layer of 2-inch trap rock stone. The pipe will be finished at the roof line with a 6-inch goose neck pipe to prevent rain infiltration. The passive SSDS is an Engineering Control for the remedial action. The remedial engineer will certify in the RAR that the passive SSDS was designed and properly installed to establish a vacuum in the gas permeable layer and a negative (decreasing outward) pressure gradient across the building slab to prevent vapor migration into the building.

17. Performance of all activities required for the remedial action, including acquisition of required permits and attainment of pretreatment requirements, in compliance with applicable laws and regulations.

18. Implementation of storm-water pollution prevention measures in compliance with applicable laws and regulations.

19. Submission of a RAR that describes the remedial activities, certifies that the remedial requirements have been achieved, defines the Site boundaries, lists any changes from

this RAWP, and describes all Engineering and Institutional Controls to be implemented at the Site.

20. Submission of an approved Site Management Plan (SMP) in the Remedial Action Plan (RAR) for long-term management of residual contamination, including plans for operation, maintenance, monitoring, inspection and certification of Engineering and Institutional Controls and reporting at a specified frequency.

21. The property will continue to be registered with an E-Designation at the NYC Buildings Department. Establishment of Engineering Controls and Institutional Controls in this RAWP and a requirement that management of these controls must be in compliance with an approved SMP. Institutional Controls will include prohibition of the following: (1) vegetable gardening and farming; (2) use of groundwater without treatment rendering it safe for the intended use; (3) disturbance of residual contaminated material unless it is conducted in accordance with the SMP; and (4) higher level of land usage without OER-approval.

COMMUNITY PROTECTION STATEMENT

The NYC Office of Environmental Remediation (OER) provides governmental oversight for the cleanup of contaminated property in NYC. This Remedial Action Work Plan ("cleanup plan") describes the findings of prior environmental studies, shows the location of identified contamination at the site, and describes the plans to clean up the site to protect public health and the environment.

This cleanup plan provides a very high level of protection for neighboring communities and also includes many other elements that address common community concerns, such as community air monitoring, odor, dust and noise controls, hours of operation, good housekeeping and cleanliness, truck management and routing, and opportunities for community participation. The purpose of this Community Protection Statement is to explain these community protection measures in non-technical language to simplify community review.

Project Information:

- Site Name: 526 Union Avenue, Brooklyn, New York
- Site Address: 526 Union Avenue, Brooklyn, New York

Project Contacts:

- OER Project Manager: Samantha Morris, 212-788-8841
- Site Project Manager: Creative Environment Solutions, Inc. 212-290-6323
- Site Safety Officer: Creative Environment Solutions, Inc. 212-290-6323
- Online Document Repository: See http://www.nyc.gov/html/oer/html/home/home.shtml

Remedial Investigation and Cleanup Plan: Under the oversight of the NYC OER, a thorough study of this property (called a remedial investigation) has been performed to identify past property usage, to sample and test soils, groundwater and soil vapor, and to identify contaminant sources present on the property. The cleanup plan has been designed to address all contaminant sources that have been identified during the study of this property.

Identification of Sensitive Land Uses: Prior to selecting a cleanup, the neighborhood was evaluated to identify sensitive land uses nearby, such as schools, day care facilities, hospitals and residential areas. The cleanup program was then tailored to address the special conditions of this community.

Qualitative Human Health Exposure Assessment: An important part of the cleanup planning for the Site is a study to find all of the ways that people might come in contact with contaminants at the Site now or in the future. This study is called a Qualitative Human Health Exposure Assessment (QHHEA). A QHHEA was performed for this project. This assessment has considered all known contamination at the Site and evaluated the potential for people to come in contact with this contamination. All identified public exposures will be addressed under this cleanup plan.

Health and Safety Plan: This cleanup plan includes a Construction Health and Safety Plan (CHASP) that is designed to protect community residents and on-Site workers. The elements of this RAWP are in compliance with applicable safety requirements of the United States Occupational Safety and Health Administration (OSHA). This RAWP includes many protective elements including those discussed below.

Site Safety Coordinator: This project has a designated Site safety coordinator to implement the CHASP. The safety coordinator maintains an emergency contact sheet and protocol for management of emergencies. The Site safety coordinator is identified at the beginning of this Community Protection Statement.

Worker Training: Workers participating in cleanup of contaminated material on this project are required to be trained in a 40-hour hazardous waste operators training course and to take annual refresher training. This pertains to workers performing specific tasks including removing contaminated material and installing cleanup systems in contaminated areas.

Community Air Monitoring Plan: Community air monitoring will be performed during this cleanup project to ensure that the community is properly protected from contaminants, dust and odors. Air samples will be tested in accordance with a detailed plan called the Community Air Monitoring Plan or CAMP. Results will be regularly reported to the NYC Office of Environmental Remediation. This cleanup plan also has a plan to address any unforeseen problems that might occur during the cleanup (called a 'Contingency Plan').

Odor, Dust and Noise Control: This cleanup plan includes actions for odor and dust control. These actions are designed to prevent off-Site odor and dust nuisances and includes steps to be taken if nuisances are detected. Generally, dust is managed by application of physical covers and by water sprays. Odors are controlled by limiting the area of open excavations, physical covers, spray foams and by a series of other actions (called operational measures). The project is also required to comply with applicable NYC noise control standards. If you observe problems in these areas, please contact the onsite Project Manager or NYC Office of Environmental Remediation Project Manager listed on the first page of this Community Protection Statement document.

Quality Assurance: This cleanup plan requires that evidence be provided to illustrate that all cleanup work required under the plan has been completed properly. This evidence will be summarized in the final report, called the Remedial Action Report. This report will be submitted to the NYC Office of Environmental Remediation and will be thoroughly reviewed.

Stormwater Management: To limit the potential for soil erosion and discharge, this cleanup plan has provisions for stormwater management. The main elements of the stormwater management include physical barriers such as tarp covers and erosion fencing, and a program for frequent inspection.

Hours of Operation: The hours for operation of cleanup will comply with the NYC Department of Buildings construction code requirements or according to specific variances

issued by that agency. For this cleanup project, the hours of operation will conform to requirements of the NYC Department of Buildings.

Signage: While the cleanup is in progress, a placard will be prominently posted at the main entrance of the property with a laminated project Fact Sheet that states that the project is in the NYC Voluntary Cleanup Program and provides project contact names and numbers, and a link to the document repository where project documents can be viewed.

Complaint Management: The contractor performing this cleanup is required to address all complaints. If you have any complaints, you can call the facility Project Manager or the NYC Office of Environmental Remediation Project Manager listed on the first page of this Community Protection Statement document, or call 311 and mention the Site is in the NYC Voluntary Cleanup Program.

Utility Mark-outs: To promote safety during excavation in this cleanup, the contractor is required to first identify all utilities and must perform all excavation and construction work in compliance with NYC Department of Buildings regulations.

Soil and Liquid Disposal: All soil and liquid material removed from the Site as part of the cleanup will be transported and disposed of in accordance with all applicable City, State and Federal regulations, and required permits will be obtained.

Soil Chemical Testing and Screening: All excavations will be supervised by a trained and properly qualified environmental professional. In addition to extensive sampling and chemical testing of soils on the Site, excavated soil will be screened continuously using hand-held instruments, by sight, and by smell to ensure proper material handling and management, and community protection.

Stockpile Management: Soil stockpiles will be kept covered with tarps to prevent dust, odor and erosion. Stockpiles will be frequently inspected. Damaged tarp covers will be

promptly replaced. Stockpiles will be protected with silt fences. Hay bales will be used, as needed, to protect storm water catch basins and other discharge points.

Trucks and Covers: Loaded trucks leaving the Site will be covered in compliance with applicable laws and regulations to prevent dust and odor. Trucks will be properly recorded in logs and records and placarded in compliance with applicable City, State and Federal laws, including those of the New York State Department of Transportation. If loads contain wet material that can leak, truck liners will be used. All transport of materials will be performed by licensed truckers and in compliance with applicable laws and regulations.

Imported Material: All fill materials proposed to be brought onto the Site will comply with rules outlined in this cleanup plan and will be inspected and approved by a qualified worker located on the Site. Waste materials will not be brought onto the Site. Trucks entering the Site with imported clean materials will be covered in compliance with applicable laws and regulations.

Equipment Decontamination: All equipment used for cleanup work will be inspected and washed, if needed, before it leaves the Site. Trucks will be cleaned at a truck inspection station on the property before leaving the Site.

Housekeeping: Locations where trucks enter or leave the Site will be inspected every day and cleaned regularly to ensure that they are free of dirt and other materials from the Site.

Truck Routing: Truck routes have been selected to: (a) limit transport through residential areas and past sensitive nearby properties; (b) maximize use of city-mapped truck routes; (c) limit total distance to major highways; (d) promote safety in entry to highways; (e) promote overall safety in trucking; and (f) minimize off-Site line-ups (queuing) of trucks entering the property. Operators of loaded trucks leaving the Site will be instructed not to stop or idle in the local neighborhood.

Final Report: The results of all cleanup work will be fully documented in a final report (called the Remedial Action Report) that will be available for public review online. A link to the online document repository and the public library with Internet access nearest the Site are listed on the first page of this Community Protection Statement document.

Long-Term Site Management: If long-term protection is needed after the cleanup is complete, the property owner will be required to comply with an ongoing Site Management Plan that calls for continued inspection of protective controls, such as Site covers. The Site Management Plan is evaluated and approved by the NYC Office of Environmental Remediation. Requirements that the property owner must comply with are defined either in the property's deed or established through a city environmental designation registered with the Department of Buildings. A certification of continued protectiveness of the cleanup will be required from time to time to show that the approved cleanup is still effective.

REMEDIAL ACTION WORK PLAN

1.0 Project Background

Tryad Group is working with the NYC Office of Environmental Remediation (OER) in the New York City Voluntary Cleanup Program to investigate and remediate a property located at 526 Union Avenue in Brooklyn, New York (the "Site"). A Remedial Investigation (RI) was performed to compile and evaluate data and information necessary to develop this Remedial Action Work Plan (RAWP) in a manner that will render the Site protective of public health and the environment consistent with the contemplated end use. This RAWP establishes remedial action objectives, provides a remedial alternatives analysis that includes consideration of a permanent cleanup, and provides a description of the selected remedial action.

The remedial action described in this document provides for the protection of public health and the environment, and complies with applicable environmental standards, criteria and guidance and applicable laws and regulations. This RAWP describes the remediation and/or mitigation activities to be implemented at the Site in coordination with the New York City Office of Environmental Remediation (OER) for the purposes of satisfying the requirements of the Hazardous Materials E-Designation Program and obtaining a Notice To Proceed. An E-Designation for Hazardous Materials (E-138) was placed on the Site by the New York City Department of City Planning (DCP) as part of CEQR number 050110. The site-specific CHASP (Appendix Two) addresses site-specific hazards, identified contaminants of concern and safety requirements associated with remediation and mitigation activities in accordance with ASTM and OSHA guidelines.

1.1 Site Location and Background

The Site is located in the Williamsburg-Greenpoint neighborhood of Brooklyn, New York and is identified as Block number 2741, Lot 3 on the New York City Tax Map. Figure One is a Site location map. The Site is bounded by Withers Street to the north, Jackson Street to the south, Meeker Avenue to the east, and Union Avenue to the west. Currently, the Site is vacant with no tenants and/or structures at the site.

1.2 Redevelopment Plan

The proposed development at the Site will involve the construction of a six (6) story concrete block structure with the roof for mechanical infrastructure. No basement is proposed; however, construction below grade surface will be performed for foundation piles, pile caps, elevator pit and stairwell. The total depth of construction is anticipated to be no deeper than five feet (5') below existing grade surface. The lot is approximately 10,000 square feet with 6,500 square feet for new building construction and approximately 3,500 square feet for accessory vehicle parking. Groundwater was identified at a depth of eight (8) to ten (10) feet bgs at this Site. A total of twenty-five (25) to thirty (30) new units are proposed for residential application. Layout of the proposed site development is presented in Appendix 1. The current zoning designation is M1-2/R6A. The remedial action contemplated under this RAWP may be implemented independently of the proposed redevelopment plan.

1.3 Description of Surrounding Property

The Site is located in the Williamsburg-Greenpoint neighborhood of Brooklyn, New York. The neighborhood is characterized by mixed use residential and commercial applications including light industrial application such as metal fabrication and automotive services. Many structures in this neighborhood are abandoned or do not currently have active tenants, although newer residential developments are occurring within a walkable distance of this Site. No schools, day care facilities, or hospitals are located within a 500-foot radius of the Site.

1.4 Summary of Past Site Uses and Areas of Concern

Historically, the Site was undeveloped as of the earliest known Sanborn record map in 1887. Circa 1905 the Site was used as a barrel storage yard. From 1916-2007 the Site was used as a junk yard. The junk yard ceased operations at an unknown date after 2007. The owner informed CES that the Site was used as a parking lot since 2007 but this operation has since ceased. No items of specific environmental concern; for example, underground storage tanks, hazardous materials storage/usage were identified from the historical review.

A previous Phase II subsurface investigation was performed by EBC Consultants, Inc. in August 2014 for the purposes of investigating the site with the known "E" designation. EBC

performed five soil borings and three groundwater probes and samples. Soil samples were compared by EBC Consultants, Inc. to Unrestricted Use and Restricted Residential Use Soil Cleanup Objectives (SCOs).

EBC Consultants, Inc. concluded that, with the exception of acetone, which a common laboratory contaminant, no VOCs or SVOCs detected above Unrestricted Use were identified in the samples collected.

EBC Consultants, Inc. concluded that the metals arsenic, barium cadmium, chromium, lead, mercury, nickel, silver, and zinc were detected above Unrestricted or Restricted Residential SCOs and that the detections were indicative of typical concentrations of metals observed in NYC soils.

EBC Consultants, Inc. concluded that the groundwater results indicated several minor detections of VOCs in all three samples and that none were above NYSDEC TOGS criteria. The detections, according to EBC Consultants, Inc. were indicative of poor quality non potable water common in NYC and is not indicative of any type or groundwater source of contamination.

Three areas of concern identified during the remedial investigations as SB-2 (to 7-feet bgs), SB-6 (to 8-feet bgs), and B-5 (to 2-feet bgs (EBC Report)) will be excavated and disposed off-site during the remedial action. These AOC's are attributed to the presence of SVOCs and metals in soil. Collection and analysis of end-point samples at the three areas of concern will be completed to determine the performance of the remedy with respect to attainment of SCOs.

1.5 Summary of Work Performed under the Remedial Investigation

In November 2015, CES conducted a New York City Office of Environmental Remediation (OER)-approved Remedial Investigation. In accordance with the Remedial Investigation, CES completed the following scope of work:

1. Installation of six (6) soil borings across the entire project Site, and collection of 13 soil samples for chemical analysis from the soil borings to evaluate soil quality;

2. Three (3) groundwater samples were collected for chemical analysis in general accordance with low-flow groundwater sampling procedures, to evaluate groundwater quality beneath the site. Groundwater samples were collected from 1-inch diameter permanent monitoring wells advanced with direct push geoprobe technology;

3. Installation of four (4) soil vapor probes were installed around Site perimeter for collection of 4 soil vapor samples for chemical analysis. The locations of the soil vapor probes were approximately 15' from adjacent property boundaries.

1.6 Summary of Findings of Remedial Investigation

A remedial investigation was performed and the results are documented in a companion document called "Remedial Investigation Report, 526 Union Avenue, Brooklyn, New York", dated November 2015 (RIR). The results of the Remedial Investigation suggested the following:

1. Surface elevation of the property ranges from approximately 10 to 11 feet above sea level, with very slight variations across the Site footprint.

2. Groundwater surface levels were observed at the Site ranging from 7.53 feet below ground surface (bgs) in the eastern monitoring well (MW-SB-6) to 6.86 feet-bgs (MW-SB-1) and 7.03 feet-bgs (MW-SB-2) in the western monitoring wells.

3. Given the relative size of the site, it can be difficult to accurately depict groundwater flow direction given subsurface interferences. CES can reasonably conclude based upon groundwater surface level observations, measurements taken using laser levels and from landmarks that groundwater flow is generally northwesterly beneath the Site towards the East River.

4. The stratigraphy of the site, from the surface down, consists of a compacted surface layer of non-native recycled concrete aggregate (RCA) to approximately 0.25 feet-bgs, consisting fine to medium crushed gravel and stone, brick fragments, metal fragments, asphalt fragments, fine to coarse sand, and silt. Immediately underlying the RCA layer to approximately 5 feet-bgs is urban fill material, as evidenced by varying fractions of brick fragments, metal fragments, and wood fragments mixed with fine to medium sand, fine to

medium gravel, and trace fractions of silt. Immediately underlying the historic fill layer to the terminal depth of the Supplemental SSI (15 feet bgs) was a mixture of fine to coarse sand, fine to medium gravel, clay, and silt. A fibrous organic native peat layer or marsh mat was observed from approximately 12 feet to 15 feet bgs in the southeastern-most boring (SB-1).

5. Soil boring sample results for both the August 2014 EBC Investigation and the November 2015 CES Investigation were compared to NYSDEC Unrestricted Use Soil Cleanup Objectives (UUSCOs) and Restricted Residential Use Soil Cleanup Standards (RRSCOs) as presented in 6NYCRR Part 375-6.8. See Figure 5 and 6 for a summary of CES soil analytical and Appendix E for Historic Environmental Reports, including the August 2014 EBC Investigation. A summary of results from both investigations is as follows.

    - One VOC, Acetone (a common laboratory contaminant) during the EBC Investigation was detected above its UUSCO (maximum of 190 µg/kg) (EBC).

    - One PCB, PCB 1254 was detected in one shallow soil sample SB-3 (0'-5') at 170 µg/kg, above UUSCOs (CES). The laboratory did also identify matrix spike and diluted detections of PCBs in samples SB-1(0'-2'), SB-2(0'-2'), SB-6 (0'-2'). The dilutions performed by the laboratory were up to 20x normal limits for the testing equipment. CES in discussion with the laboratory confirmed the probable presence of low level PCBs in these samples. The exact concentration could not be estimated by the laboratory.

    - Several SVOCs including benz(a)anthracene (max of 4,100 µg/kg), benzo(a)pyrene (max of 3,600 µg/kg), benzo(b)fluoranthene (max of 3,900 µg/kg), benzo(k)fluoranthene (max of 2,600 µg/kg), chrysene (max of 4,400 µg/kg), dibenzo(a,h)anthracene (4,500 µg/kg), and indeno(1,2,3-cd)pyrene (max of 1,900 µg/kg) were detected above UUSCOs and RRSCOs in 4 of the 6 shallow samples (CES).

- Two pesticides 4,4'-DDD (43 µg/kg) and 4,4'-DDT (61 µg/kg) were detected above UUSCOs in shallow soil sample SB-6 (0'-2') (CES).

- Several metals including arsenic (EBC) (max of 108 mg/kg), barium (EBC) (max of 2.730 mg/kg), cadmium (EBC) (max of 42.7 mg/kg), chromium (CES) (max of 224 mg/kg), copper (CES) (max of 1160 mg/kg), lead (CES) (max of 5,540 mg/kg), mercury (EBC) (max of 30.9mg/kg), nickel (EBC) (max of 323 mg/kg), silver (EBC) (max of 7.29 mg/kg) and zinc (CES) (max of 5710 mg/kg) were detected above UUSCOs in all soil samples except for SB-4 (5'-7'). Of these, all exceeded RRSCOs with the exception of silver. Metals in SB-6 (2'-4') exceeded UUSCOs but did not exceed RRSCOs. Highest concentrations of metals were consistently detected in shallow sample SB-1 (0'-2') (CES) in the southwestern-most area of the Site adjacent to the sidewalk area.

- Overall, the soil results were consistent with data identified at sites with historic fill material in NYC.

6. Groundwater samples results were compared to New York State 6NYCRR Part 703.5 Class GA groundwater quality standards (GQS). See Figure 7 for a summary of groundwater analytical.

   - Groundwater samples did not exhibit concentrations of VOCs, PCBs, or Pesticides above GQS.

   - SVOCs including Benzo (a) anthracene (max of 0.4 µg/L), Benzo (a) pyrene (max of 0.35 µg/L), Benzo (b) fluoranthene (max of 0.32 µg/L), Benzo (k) fluoranthene (max of 0.27 µg/L), Chrysene (max of 0.38 µg/L), and Indeno (1,2,3-cd) pyrene (max of 0.16µg/L) were detected above GQS in groundwater beneath the site.

   - Dissolved metals including Aluminum (max of 0.187 mg/L), Iron (max of 1.28 mg/L), Manganese (max of 2.01 mg/L), and Sodium (max of 32.2 mg/L) were detected above GQS in groundwater beneath the site.

- The detections are indicative of poor quality non potable water common in NYC and is not indicative of any type or groundwater source of contamination.

7. Soil vapor results collected during the Subsurface Investigation were compared to the compounds listed in the Indoor Air Guidance Values and the Vapor Intrusion Matrices 1 and 2 detailed in the New York State Department of Health (NYSDOH) Final Guidance for Evaluating Soil Vapor Intrusion, dated October 2006. 1,1,1-TCA was detected in two of four samples at a maximum concentration of 12.3 $\mu g/m^3$. PCE was detected in all four samples at a maximum concentration of 55.9 $\mu g/m^3$. TCE was detected in one sample at 4.23 $\mu g/m^3$. Total BTEX concentrations ranged from 2.84 µg/m3 (CES-1) to 41.77 µg/m3 (CES-2).

For more detailed results, consult the RIR. Based on an evaluation of the data and information from the RIR and this RAWP, disposal of significant amounts of hazardous waste is not suspected at this site.

2.0 Remedial Action Objectives

The Site remedial action objectives are to comply with standard protocols of NYCOER for the proper handling of soil and groundwater during construction. The owner has agreed to perform standard remedial objectives including disposal of on-site soils, installation of a soil vapor barrier, design and installation of a passive sub-slab depressurization system (SSDS) and importing of clean backfill for a two (2)-foot clean soil cap in the parking area with asphalt cover to protect the building and occupants from environmental issues, should they exist now or in the future.

Remedial and mitigation measures described herein will be performed in accordance with applicable laws and regulations and the site-specific CHASP. This remedy is protective of public health and/or the environment for the intended use. The proposed plan achieves all of the remedial action goals established for the project. The proposed remedial action is effective in both the short-term and long-term and reduces mobility, toxicity and volume of contaminants and uses standard methods that are well established in the industry.

The proposed remedial action will consist of:

1. Preparation of a Community Protection Statement and performance of all required NYC VCP Citizen Participation activities according to an approved Citizen Participation Plan.
2. Performance of a Community Air Monitoring Program for particulates and volatile organic carbon compounds.
3. Establishment of Track 4 Site-specific Soil Cleanup Objectives (SCOs).
4. Three areas of concern identified in the Remedial Investigation as SB-2 (to 7-feet bgs), SB-6 (to 8-feet bgs), and B-5 (to 2-feet bgs (EBC Report)) will be excavated and disposed off-site during the remedial action. The final volume and dimensions will be determined during construction of waste class sampling. Collection and analysis of end-point samples at the three areas of concern will be completed to determine the performance of the remedy with respect to attainment of SCOs.
5. In addition to the end-point samples described above, one end point sample will be collected at the bottom of the elevator pit and stairwell respectively, and four additional footprint end-points will be collected beneath the general footprint of the building. One end-point sample will be collected beneath the excavation for the parking lot.
6. Site mobilization involving Site security setup, equipment mobilization, utility mark outs and marking & staking excavation areas.
7. Completion of a Waste Characterization Study prior to excavation activities. Waste characterization soil samples will be collected at a frequency dictated by disposal facility(s).
8. Screening of excavated soil/fill during intrusive work for indications of contamination by visual means, odor, and monitoring with a PID. Appropriate segregation of excavated media on-Site.
9. Management of excavated materials including temporarily stockpiling and segregating in accordance with defined material types and to prevent co-mingling of contaminated material and non-contaminated materials.
10. Removal of underground storage tanks (if encountered) and closure of petroleum spills (if encountered) in compliance with applicable local, State and Federal laws and regulations. Registration of tanks and reporting of any petroleum spills associated

with UST's and appropriate closure of these petroleum spills, if applicable, will be conducted in compliance with applicable local, State and Federal laws and regulations.

11. Transportation and off-Site disposal of all soil/fill material at licensed or permitted facilities in accordance with applicable laws and regulations for handling, transport, and disposal, and this plan. Sampling and analysis of excavated media as required by disposal facilities. Appropriate segregation of excavated media on-Site.
12. Construction of an engineered composite cover consisting of consisting of building slabs (at least 4-inches thick) and a two-foot clean soil fill cover with asphalt cover in the parking area to prevent human exposure to residual soil/fill remaining under the Site.
13. Installation of a vapor barrier system consisting of vapor barrier beneath the building slab and outside of sub-grade foundation sidewalls to mitigate soil vapor migration into the building. The vapor barrier system will consist of a 20-mil Raven Industries' Vapor Block Plus vapor barrier (or equivalent) below the slab throughout the full building area and a 20-mil Raven Industries' Vapor Block Plus vapor barrier (or equivalent) outside all sub-grade foundation sidewalls. All welds, seams and penetrations will be properly sealed to prevent preferential pathways for vapor migration. The vapor barrier system is an Engineering Control for the remedial action. The remedial engineer will certify in the RAR that the vapor barrier system was designed and properly installed to mitigate soil vapor migration into the building.
14. Installation of a passive sub-slab depressurization system (SSDS) designed to maintain negative pressure beneath the entire area of the building slab addressed by this RAP. The Remedial Closure Report will include photographs of the installation of SSDS laterals as well as if any deviations have occurred due to construction scope changes. The Remedial Closure Report will include PE/RA certified as-built plans depicting SSDS lateral, and riser pipe configuration and locations, as well as documentation proving that the active SSDS was appropriately designed to maintain negative pressure beneath the entire area of the building slab. The passive SSDS system with consist of a network of horizontal pipe set in the middle of a gas permeable layer immediately beneath the building slab and vapor barrier system. The

horizontal piping will consist of fabric wrapped, perforated schedule 40 4-inch PVC pipe connected to a 4 or 6-inch steel riser pipe that penetrates the slab and travels through the building to the roof. The gas permeable layer will consistent of a 6-inch thick layer of 2-inch trap rock stone. The pipe will be finished at the roof line with a 6-inch goose neck pipe to prevent rain infiltration. The passive SSDS is an Engineering Control for the remedial action. The remedial engineer will certify in the RAR that the passive SSDS was designed and properly installed to establish a vacuum in the gas permeable layer and a negative (decreasing outward) pressure gradient across the building slab to prevent vapor migration into the building.

15. Import of materials to be used for backfill and cover in compliance with this plan and in accordance with applicable laws and regulations.
16. Performance of all activities required for the remedial action, including acquisition of required permits and attainment of pretreatment requirements, in compliance with applicable laws and regulations.
17. Implementation of storm-water pollution prevention measures in compliance with applicable laws and regulations.
18. Submission of a RAR that describes the remedial activities, certifies that the remedial requirements have been achieved, defines the Site boundaries, lists any changes from this RAWP, and describes all Engineering and Institutional Controls to be implemented at the Site

Based on the results of the RI and as detailed above, the following Remedial Action Objectives (RAOs) have been identified for this Site:

Soil

- Prevent direct contact with contaminated soil.
- Prevent exposure to contaminants volatilizing from contaminated soil.
- Prevent migration of contaminants that would result in groundwater or surface water contamination.

Groundwater

- Remove contaminant sources causing impact to groundwater.
- Prevent direct exposure to contaminated groundwater.
- Prevent exposure to contaminants volatilizing from contaminated groundwater.

Soil Vapor

- Prevent exposure to contaminants in soil vapor.
- Prevent migration of soil vapor into dwelling and other occupied structures.

3.0 Remedial Alternatives Analysis

The goal of the remedy selection process is to select a remedy that is protective of human health and the environment taking into consideration the current, intended and reasonably anticipated future use of the property. The remedy selection process begins by establishing RAOs for media in which chemical constituents were found in exceedance of applicable standards, criteria and guidance values (SCGs). Remedial alternatives are then developed and evaluated based on the following ten criteria:

- Protection of human health and the environment;
- Compliance with SCGs;
- Short-term effectiveness and impacts;
- Long-term effectiveness and permanence;
- Reduction of toxicity, mobility, or volume of contaminated material;
- Implementability;
- Cost effectiveness;
- Community acceptance;
- Land use; and
- Sustainability.

As required, a Track 1 Unrestricted Use scenario is evaluated for the remedial action. The following is a detailed description of the alternatives analyzed to address impacted media at the Site:

Alternative 1:

- Selection of Track 1 Unrestricted Use Soil Cleanup Objectives as defined in NYSDEC 6NYCRR Part 375-6.8;
- Removal of all soil/fill exceeding Track 1 Unrestricted Use SCOs throughout the Site and confirmation that Track 1 Unrestricted Use SCOs have been achieved with post-excavation endpoint sampling. If soil/fill containing analytes at concentrations above Unrestricted Use SCOs is still present at the base of the excavation after removal of all soil required for construction of the new building's cellar level is complete, additional

excavation would be performed to ensure complete removal of soil/ fill that does not meet Track 1 Unrestricted Use SCOs;

- No Engineering or Institutional Controls are required for a Track 1 cleanup. However, as part of development, a vapor barrier and a passive sub-slab depressurization system (SSDS) would be installed to prevent potential exposures from soil vapor in the future; and

- Placement of final cover as part of new development.

Alternative 2:

- Establishment of Site Specific Track 4 SCOs;
- Removal of all soil/fill exceeding Track 4 Site-specific SCOs and confirmation that Track 4 Site-specific SCOs have been achieved with post-excavation end point sampling. Based on the results of the Remedial Investigation, it is expected that this alternative would be achieved by excavating three specific hot spots to depths ranging from approximately 2 through 8 feet. As part of development, soil beneath most of the site will be removed to a depth of approximately 5 feet. If soil/fill containing analytes at concentrations above Track 4 Site-specific SCOs is still present at the base of the excavation, additional excavation would be performed to meet Track 4 Site-Specific SCOs;
- Placement of a composite cover system over the entire Site to prevent exposure to remaining soil/fill;
- Installation of a vapor barrier (or) waterproofing/vapor barrier system beneath the building slab and along foundation side walls to prevent potential exposures from soil vapor;
- Installation of a passive Sub Slab Depressurization System (SSDS);
- Establishment of use restrictions including prohibitions on the use of groundwater from the Site; prohibitions of restricted Site uses, such as farming or vegetable gardening, to prevent future exposure pathways; and prohibition of a higher level of land use without OER approval;

- Establishment of an approved Site Management Plan (SMP) to ensure long-term management of these Engineering and Institutional Controls including the performance of periodic inspections and certification that the controls are performing as they were intended. The SMP will note that the property owner and property owner's successors and assigns must comply with the approved SMP; and
- The property will continue to be registered with an E-Designation at the NYC Buildings Department.

3.1 Threshold Criteria

Protection of Public Health and the Environment

This criterion is an evaluation of the remedy's ability to protect public health and the environment, and an assessment of how risks posed through each existing or potential pathway of exposure are eliminated, reduced or controlled through removal, treatment, and implementation of Engineering Controls or Institutional Controls. Protection of public health and the environment must be achieved for all approved remedial actions.

Alternative 1 would be protective of human health and the environment by removing all soil/fill exceeding Track 1 Unrestricted Use SCO's and groundwater protection standards, thus eliminating potential for direct contact with contaminated soil/fill once construction is complete and eliminating the risk of contaminants leaching into groundwater.

Alternative 2 would achieve comparable protections of human health and the environment by excavation and removal of most of the historic fill at the Site and by ensuring that remaining soil/fill on-Site meets Track 4 Site-Specific SCO's, as well as by placement of Engineering Controls, including a composite cover system and passive SSDS. The composite cover system would prevent direct contact with any remaining on-Site soil/fill. Establishment of Track 4 Site-Specific SCO's would minimize the risk of contamination leaching into groundwater.

For both Alternatives, potential exposure to contaminated soils or groundwater during construction would be minimized by implementing a Construction Health and Safety Plan, an approved Soil/Materials Management Plan, and Community Air Monitoring Plan (CAMP).

Potential contact with contaminated groundwater would be prevented as its use is prohibited by city laws and regulations. Potential future migration of off-Site soil vapors into the new building would be prevented by installing a vapor barrier below the building slab and outside foundations walls below grade.

3.2 Balancing Criteria

Compliance with Standards, Criteria and Guidance (SCGs)

This evaluation criterion assesses the ability of the alternative to achieve applicable standards, criteria and guidance.

Alternative 1 would achieve compliance with the remedial goals, chemical-specific SCGs and RAOs for soil through removal of soil to achieve Track 1 Unrestricted Use SCO's and Protection of Groundwater SCO's. Compliance with SCGs for soil vapor would also be achieved by installing a waterproofing/vapor barrier system below the new building's basement slab and continuing the vapor barrier outside of subgrade foundation walls, as part of development.

Alternative 2 would achieve compliance with the remedial goals, chemical-specific SCG's and RAOs for soil through removal of soil to meet Track 4 Site-Specific SCO's. Compliance with SCG's for soil vapor would also be achieved by installing an passive SSDS as well as by waterproofing/vapor barrier system below the new building's basement slab and continuing the vapor barrier outside of subgrade foundation walls. A Site Management Plan would ensure that these controls remained protective for the long term.

Health and safety measures contained in the CHASP and Community Air Monitoring Plan (CAMP) will be implemented during Site redevelopment under this RAWP. For both Alternatives, focused attention on means and methods employed during the remedial action would ensure that handling and management of contaminated material would be in compliance with applicable SCGs. These measures will protect on-site workers and the surrounding community from exposure to Site-related contaminants.

Short-Term Effectiveness and Impacts

This evaluation criterion assesses the effects of the alternative during the construction and implementation phase until remedial action objectives are met. Under this criterion, alternatives are evaluated with respect to their short term effects during the remedial action on public health and the environment during implementation of the remedial action, including protection of the community, protection of onsite workers and environmental impacts.

Both Alternative 1 and 2 have similar short-term effectiveness during their implementation, as each requires excavation of historic fill material. Both alternatives would result in short-term dust generation impacts associated with excavation, handling, load out of materials, and truck traffic. Short-term impacts could potentially be higher for Alternative 1 since excavation of greater amounts of historical fill material would take place. However, focused attention to means and methods during a Track 1 removal action, including community air monitoring and appropriate truck routing, would minimize the overall impact of these activities.

An additional short-term adverse impact and risks to the community associated with both remedial alternatives is increased truck traffic. Truck traffic will be routed on the most direct course using major thoroughfares where possible and flag persons will be used to protect pedestrians at Site entrances and exits.

The potential adverse impact to the community, workers and the environment for both alternatives would be minimized through implementation of control plans including a Construction Health and Safety Plan, a Community Air Monitoring Plan (CAMP) and a Soil/Materials Management Plan (SMMP), during all on-Site soil disturbance activities and would minimize the release of contaminants into the environment. Both alternatives provide short-term effectiveness in protecting the surrounding community by decreasing the risk of contact with on-Site contaminants. Construction workers operating under appropriate management procedures and a Construction Health and Safety Plan (CHASP) would provide protection from on-Site contaminants by using personal protective equipment would be worn consistent with the documented risks within the respective work zones.

Long-term effectiveness and permanence

This evaluation criterion addresses the results of a remedial action in terms of its permanence and quantity/nature of waste or residual contamination remaining at the Site after response objectives have been met, such as permanence of the remedial alternative, magnitude of remaining contamination, adequacy of controls including the adequacy and suitability of Engineering Controls/Institutional Controls (ECs/ICs) that may be used to manage contaminant residuals that remain at the Site and assessment of containment systems and ICs that are designed to eliminate exposures to contaminants, and long-term reliability of ECs.

Alternative 1 would achieve long-term effectiveness and permanence related to on-Site contamination by permanently removing all impacted soil/fill above Track 1 Unrestricted Use SCO's. Removal of on-Site contaminant sources will also prevent future groundwater contamination.

Alternative 2 would provide long-term effectiveness by removing most on-Site contamination and attaining Track 4 Site-Specific SCOs; installing a composite cover system across the Site; maintaining use restrictions.

Reduction of toxicity, mobility, or volume of contaminated material

This evaluation criterion assesses the remedial alternative's use of remedial technologies that permanently and significantly reduce toxicity, mobility, or volume of contaminants as their principal element. The following is the hierarchy of source removal and control measures that are to be used to remediate a Site, ranked from most preferable to least preferable: removal and/or treatment, containment, elimination of exposure and treatment of source at the point of exposure. It is preferred to use treatment or removal to eliminate contaminants at a Site, reduce the total mass of toxic contaminants, cause irreversible reduction in contaminants mobility, or reduce of total volume of contaminated media.

Alternative 1 will permanently eliminate the toxicity, mobility, and volume of contaminants from on-Site soil by removing all soil in excess of Track 1 Unrestricted Use SCO's.

Alternative 2 would remove most of the historic fill at the Site, and all remaining on-Site soil/fill beneath the new building will meet Track 4 Site-Specific SCO's.

Alternative 1 would remove a greater total mass of contaminants from the Site. The removal of soil to five feet for the new development in both scenarios would lessen the difference in contaminant mass removal between these two alternatives.

Implementability

This evaluation criterion addresses the technical and administrative feasibility of implementing an alternative and the availability of various services and materials required during its implementation, including technical feasibility of construction and operation, reliability of the selected technology, ease of undertaking remedial action, monitoring considerations, administrative feasibility (e.g. obtaining permits for remedial activities), and availability of services and materials.

The techniques, materials and equipment to implement both Alternatives 1 and 2 are readily available and have been proven to be effective in remediating the contaminants present on the Site. They use standard equipment and technologies that are well established in the industry. The reliability of each remedy is also high. There are no special difficulties associated with any of the activities proposed.

Cost effectiveness

This evaluation criterion addresses the cost of alternatives, including capital costs (such as construction costs, equipment costs, and disposal costs, engineering expenses) and site management costs (costs incurred after remedial construction is complete) necessary to ensure the continued effectiveness of a remedial action.

Since historic fill at the Site was found to extend to a depth of up to seven feet below grade during the RI, and the new building requires excavation of the entire Site to a depth of five feet, the costs associated with Alternative 1 would be significantly higher than Alternative 2. Additional costs may include installation of additional shoring/underpinning, disposal of additional soil, and import of clean soil for backfill.

The remedial plan would couple the remedial action with the redevelopment of the Site, lowering total costs. The remedial plan will also consider the selection of the most appropriate disposal facilities to reduce transportation and disposal costs during cleanup and redevelopment of the Site.

Community Acceptance

This evaluation criterion addresses community opinion and support for the remedial action. Observations here will be supplemented by public comment received on the RAWP.

This RAWP will be subject to a public review under the NYC VCP and will provide the opportunity for detailed public input on the remedial alternatives and the selected remedy. This public comment will be considered by OER prior to approval of this plan. The Citizen Participation Plan for the project is provided in Appendix 2. Observations here will be supplemented by public comment received on the RAWP. Under both alternatives, the overall goals of the remedial program, to protect public health and the environment and eliminate potential contaminant exposures, have been broadly supported by citizens in NYC communities.

Land use

This evaluation criterion addresses the proposed use of the property. This evaluation has considered reasonably anticipated future uses of the Site and takes into account: current use and historical and/or recent development patterns; applicable zoning laws and maps; NYS Department of State's Brownfield Opportunity Areas (BOA) pursuant to section 970-r of the general municipal law; applicable land use plans; proximity to real property currently used for residential use, and to commercial, industrial, agricultural, and/or recreational areas; environmental justice impacts, Federal or State land use designations; population growth patterns and projections; accessibility to existing infrastructure; proximity of the site to important cultural resources and natural resources, potential vulnerability of groundwater to contamination that might emanate from the site, proximity to flood plains, geography and geology; and current Institutional Controls applicable to the site.

The current, intended, and reasonably anticipated future land use of the Site and its surroundings are compatible with the selected remedy of soil remediation. The proposed future use of the Site includes the construction of a six (6) story concrete block structure with the Roof Level utilized for mechanical infrastructure. The lot is approximately 10,000 square feet with 6,500 square feet for new building construction and approximately 3,500 square feet for accessory vehicle parking. Following remediation, the Site will meet Track 4 Site-Specific

SCOs, both of which are protective of public health and the environment for its planned residential use. The proposed use is compliant with the property's zoning and is consistent with recent development patterns. The areas surrounding the site is characterized by mixed use residential and commercial applications including light industrial application such as metal fabrication and automotive services. Many structures in this neighborhood are abandoned or do not currently have active tenants, although newer residential developments are occurring within a walkable distance of this Site. No schools, day care facilities, or hospitals are located within a 500-foot radius of the Site. The proposed development would clean up the property and make it safer, create new employment opportunities, and other economic benefits from land revitalization.

Temporary short-term project impacts are being mitigated through site management controls and truck traffic controls during remediation activities. Following remediation, the Site will meet either Track 1 Unrestricted Use SCOs or Track 4 Site-Specific SCOs, both of which are protective of public health and the environmental for its planned use.

The Site is not in close proximity to important cultural resources, including federal or state historic or heritage sites or Native American religious sites, natural resources, waterways, wildlife refuges, wetlands, or critical habitats of endangered or threatened species. The Site is located in an urban area and not in proximity to fish or wildlife and neither alternative would result in any potential exposure pathways of contaminant migration affecting fish or wildlife. The remedial action is also protective of groundwater natural resources. The Site does not lie in a Federal Emergency Management Agency (FEMA)-designated flood plain. Both alternatives are equally protective of natural resources and cultural resources. Improvements in the current environmental condition of the property achieved by both alternatives considered in this plan are consistent with the City's goals for cleanup of contaminated land.

Sustainability of the Remedial Action

This criterion evaluates the overall sustainability of the remedial action alternatives and the degree to which sustainable means are employed to implement the remedial action including those that take into consideration NYC's sustainability goals defined in PlaNYC: A Greener, Greater New York. Sustainability goals may include: maximizing the recycling and reuse of

non-virgin materials; reducing the consumption of virgin and non-renewable resources; minimizing energy consumption and greenhouse gas emissions; improving energy efficiency; and promotion of the use of native vegetation and enhancing biodiversity during landscaping associated with Site development.

While Alternative 2 would potentially result in lower energy usage based on reducing the volume of material transported off-Site, both remedial alternatives are comparable with respect to the opportunity to achieve sustainable remedial action. The remedial plan for either alternative would take into consideration the shortest trucking routes during off-Site disposal of historic fill and other soils, which would reduce greenhouse gas emissions and conserve energy used to fuel trucks. The New York City Clean Soil Bank program is available for reuse of any clean native soils under either alternative. A complete list of green remedial activities considered as part of the NYC VCP is included in a Sustainability Statement.

SELECTION OF THE PREFERRED REMEDY

The preferred remedy for the site is Alternative 2, Site Specific Track 4 cleanup. The Alternative 2 remedy will remove all soil/fill exceeding Track 4 Site Specific SCOs throughout the Site, which will be confirmed with post-excavation sampling. If soil/fill containing analytes at concentrations above Track 4 Site Specific SCOs is still present at the base or walls of the excavation after removal of all soil required for construction of the new building's cellar level and slab are complete, additional excavation would be performed to ensure complete removal of soil/ fill that does not meet Track 4 Site Specific SCOs.

Engineering Controls are required for soil management for a Track 4 cleanup. A concrete slab covering the entire site and waterproofing membrane would be installed as part of standard building development and are considered part of the remedy. Additional soil vapor management would include a passive SSDS beneath the new building to address soil vapor contamination. Use restrictions will be imposed on the site and the Site would continue to be encumbered with an E-designation for hazardous material.

4.0 Remedial Action

4.1 Summary of Preferred Remedial Action

The preferred remedial action alternative is Alternative 2, the Track 4 remedial action. The preferred remedial action achieves protection of public health and the environment for the intended use of the property. The preferred remedial action will achieve all of the remedial action objectives established for the project and addresses applicable SCGs. The preferred remedial action is effective in both the short-term and long-term and reduces mobility, toxicity and volume of contaminants. The preferred remedial action alternative is cost effective and implementable and uses standards methods that are well established in the industry.

The proposed remedial action will consist of:

1. Preparation of a Community Protection Statement and performance of all required NYC VCP Citizen Participation activities according to an approved Citizen Participation Plan.

2. Performance of a Community Air Monitoring Program for particulates and volatile organic carbon compounds.

3. Establishment of Track 4 Site-specific Soil Cleanup Objectives (SCOs).

4. Site mobilization involving Site security setup, equipment mobilization, utility mark outs and marking & staking excavation areas.

5. Completion of a Waste Characterization Study prior to excavation activities. Waste characterization soil samples will be collected at a frequency dictated by disposal facility(s).

6. Excavation and removal of soils to achieve Track 4 Site Specific SCOs. For development purposes, soils will be excavated to approximately five feet (5') below existing grade surface for foundation piles, pile caps, elevator pit and stairwell. In

addition, three areas of concern (hotspots) identified in the Remedial Investigation as SB-2 (to 7-feet bgs), SB-6 (to 8-feet bgs), and B-5 (to 2-feet bgs (EBC Report)) will be excavated and disposed off-site during the remedial action. The final volume and dimensions will be determined during construction of waste class sampling. Approximately, 1000 tons of soil will be excavated and removed from this Site.

7. Screening of excavated soil/fill during intrusive work for indications of contamination by visual means, odor, and monitoring with a PID. Appropriate segregation of excavated media on-Site.

8. Management of excavated materials including temporarily stockpiling and segregating in accordance with defined material types and to prevent co-mingling of contaminated material and non-contaminated materials.

9. Removal of underground storage tanks (if encountered) and closure of petroleum spills (if encountered) in compliance with applicable local, State and Federal laws and regulations. Registration of tanks and reporting of any petroleum spills associated with UST's and appropriate closure of these petroleum spills, if applicable, will be conducted in compliance with applicable local, State and Federal laws and regulations.

10. Transportation and off-Site disposal of all soil/fill material at licensed or permitted facilities in accordance with applicable laws and regulations for handling, transport, and disposal, and this plan. Sampling and analysis of excavated media as required by disposal facilities. Appropriate segregation of excavated media on-Site.

11. Collection and analysis of end-point samples at the three Hotspot areas. In addition, one end point sample will be collected at the bottom of the elevator pit and stairwell respectively, and four additional end-point samples will be collected beneath the general footprint of the building. One end-point sample will be collected beneath the excavation for the parking lot.

12. Import of materials to be used for backfill and cover in compliance with this plan and in accordance with applicable laws and regulations.

13. Construction of an engineered composite cover consisting of building slabs (at least 4-inches thick) and a two-foot clean soil fill cover with asphalt cover in the parking area to prevent human exposure to residual soil/fill remaining under the Site.

14. Installation of demarcation layer in landscaped ares.

15. Installation of a vapor barrier system consisting of a vapor barrier beneath the building slab and outside of sub-grade foundation sidewalls to mitigate soil vapor migration into the building. The vapor barrier system will consist of a 20-mil Raven Industries' Vapor Block Plus vapor barrier (or equivalent)below the slab throughout the full building area and a 20-mil Raven Industries' Vapor Block Plus vapor barrier (or equivalent) outside all sub-grade foundation sidewalls. All welds, seams and penetrations will be properly sealed to prevent preferential pathways for vapor migration. The vapor barrier system is an Engineering Control for the remedial action. The remedial engineer will certify in the RAR that the vapor barrier system was designed and properly installed to mitigate soil vapor migration into the building.

16. Installation of a passive sub-slab depressurization system (SSDS) designed to maintain negative pressure beneath the entire area of the building slab addressed by this RAP. The Remedial Closure Report will include photographs of the installation of SSDS laterals as well as if any deviations have occurred due to construction scope changes. The Remedial Closure Report will include PE/RA certified as-built plans depicting SSDS lateral, and riser pipe configuration and locations, as well as documentation proving that the active SSDS was appropriately designed to maintain negative pressure beneath the entire area of the building slab. The passive SSDS system will consist of a network of horizontal pipes set in the middle of a gas permeable layer immediately beneath the building slab and vapor barrier system. The horizontal piping will consist of fabric wrapped, perforated schedule forty 40 4-inch PVC pipes connected to a 4 or 6-inch steel riser pipe that penetrates the slab and travels through the building to the roof. The gas permeable layer will consistent of a 6-inch thick layer of 2-inch trap rock stone. The pipe will be finished at the roof line with a 6-inch goose neck pipe to prevent rain infiltration. The passive SSDS is an

Engineering Control for the remedial action. The remedial engineer will certify in the RAR that the passive SSDS was designed and properly installed to establish a vacuum in the gas permeable layer and a negative (decreasing outward) pressure gradient across the building slab to prevent vapor migration into the building.

17. Performance of all activities required for the remedial action, including acquisition of required permits and attainment of pretreatment requirements, in compliance with applicable laws and regulations.

18. Implementation of storm-water pollution prevention measures in compliance with applicable laws and regulations.

19. Submission of a RAR that describes the remedial activities, certifies that the remedial requirements have been achieved, defines the Site boundaries, lists any changes from this RAWP, and describes all Engineering and Institutional Controls to be implemented at the Site.

20. Submission of an approved Site Management Plan (SMP) in the Remedial Action Plan (RAR) for long-term management of residual contamination, including plans for operation, maintenance, monitoring, inspection and certification of Engineering and Institutional Controls and reporting at a specified frequency.

21. The property will continue to be registered with an E-Designation at the NYC Buildings Department. Establishment of Engineering Controls and Institutional Controls in this RAWP and a requirement that management of these controls must be in compliance with an approved SMP. Institutional Controls will include prohibition of the following: (1) vegetable gardening and farming; (2) use of groundwater without treatment rendering it safe for the intended use; (3) disturbance of residual contaminated material unless it is conducted in accordance with the SMP; and (4) higher level of land usage without OER-approval.

4.2 Soil Cleanup Objectives and Soil/ Fill Management

The following Track 4 Site-Specific SCO's will be utilized for this project:

Contaminant	Site-Specific SCO's
Total SVOCs	250 ppm
Lead	1,200 ppm
Mercury	3.5 ppm
Barium	800 ppm
Arsenic	25 ppm

Soil and materials management on-Site and off-Site, including excavation, handling and disposal, will be conducted in accordance with the Soil/Materials Management Plan in Appendix 1. Discrete contaminant sources (such as hotspots) identified during the remedial action will be identified by GPS or surveyed. This information will be provided in the Remedial Action Report.

Soil/Fill Excavation and Removal

The footprint of the Site will be excavated to a maximum depth of approximately 5 feet below grade for development purposes with the exception of the parking lot requiring approximately 2-feet of excavation. A small portion of property will be excavated to the depths of 8 feet below grade for hotspot/area of concern areas previously detailed and/or elevator pit(s). The location of planned excavations is shown is detailed in Appendix 1 which shows the proposed development plans with foundation infrastructure. The total quantity of soil/fill expected to be excavated and disposed off-Site is approximately 1,000 tons. For each disposal facility to be used in the remedial action, a letter from the developer/QEP to the receiving facility requesting approval for disposal and a letter back to the developer/QEP providing approval for disposal will be submitted to OER prior to any transport and disposal of soil at a facility.

The proposed disposal locations for Site-derived impacted materials are listed below. Additional disposal locations established at a later date will be reported promptly to the OER Project Manager.

Disposal Facility	Waste Type	Estimated Quantity
Clean Earth Carteret	NYC Urban Fill	1000 tons

End-point Sampling

End-point samples will be analyzed for compounds and elements as described below utilizing the following methodology:

- Volatile organic compounds by EPA Method 8260;
- Semi-volatile organic compounds by EPA Method 8270;
- Target Analyte List metals; and
- Pesticides/PCBs by EPA Method 8081/8082.

New York State ELAP certified labs will be used for all end-point sample analyses. Labs performing end-point sample analyses will be reported in the RAR. The RAR will provide a tabular and map summary of all end-point sample results and will include all data including non-detects and applicable standards and/or guidance values.

Confirmation End-point Sampling

Removal actions for development purposes under this plan will be performed in conjunction with confirmation end-point soil sampling. Collection and analysis of end-point samples at the three Hotspot areas. In addition, one end point sample will be collected at the bottom of the elevator pit and stairwell respectively, and four additional end-point samples will be collected beneath the general footprint of the building. One end-point sample will be collected beneath the excavation for the parking lot. To evaluate attainment of Track 4 Site-specific SCOs, analytes will include those for which SCOs have been developed, including total SVOCs, Arsenic, Lead, Mercury, and Barium according to analytical methods described above.

Hotspot End-point Sampling

End-point samples will be collected from the sidewalls and base of excavation at each of the 3 hotspot locations identified in the Remedial Investigation, according to the procedure listed below. Hotspots include SB-2 (to 7-feet bgs), SB-6 (to 8-feet bgs), and B-5 (to 2-feet bgs) total SVOCs, Arsenic, Lead, Mercury, and Barium. End-point samples will be analyzed for SCO trigger parameters.

For any hotspots identified during this remedial program, including any hotspots identified during the remedial action, hotspot removal actions will be performed to ensure that hotspots are fully removed and end-point samples will be collected at the following frequency:

1. For excavations less than 20 feet in total perimeter, at least one bottom sample and one sidewall sample biased in the direction of surface runoff.
2. For excavations 20 to 300 feet in perimeter:
    - For surface removals, one sample from the top of each sidewall for every 30 linear feet of sidewall and one sample from the excavation bottom for every 900 square feet of bottom area.
    - For subsurface removals, one sample from each sidewall for every 30 linear feet of sidewall and one sample from the excavation bottom for every 900 square feet of bottom area.
3. For sampling of volatile organics, bottom samples should be taken within 24 hours of excavation, and should be taken from the zero to six-inch interval at the excavation floor. Samples taken after 24 hours should be taken at six to twelve inches.
4. For contaminated soil removal, post remediation soil samples for laboratory analysis should be taken immediately after contaminated soil removal. If the excavation is enlarged horizontally, additional soil samples will be taken pursuant to bullets 1-3 above.

Post-remediation end-point sample locations and depth will be biased towards the areas and depths of highest contamination identified during previous sampling episodes unless field indicators such as field instrument measurements or visual contamination identified during the remedial action indicate that other locations and depths may be more heavily contaminated. In all cases, post-remediation samples should be biased toward locations and depths of the highest expected contamination.

If either LNAPL and/or DNAPL are detected, appropriate samples will be collected for characterization and “finger print analysis” and required regulatory reporting (i.e. spills hotline) will be performed.

Quality Assurance/Quality Control

The QA/QC reporting will consist of the following:

- Sample collection apparatus
- Sampling methods
- Decontamination methods
- Sample containers
- Holding time
- Preservatives including temperature
- Lab blanks
- Detection levels
- Standards for comparative analysis

Import of Soils

Import of soils onto the property will be performed in conformance with the Soil/Materials Management Plan in Appendix 1.

Reuse of Onsite Soils

Soil reuse is not planned on this project.

4.3 Engineering Controls

This property will achieve Track 4 Site specific SCOs and Engineering Controls are required. Engineering Controls will be employed in the remedial action to address residual contamination remaining at the site. The Site has 3 primary Engineering Control Systems. These are:

(1) Composite Cover System consisting building slabs and a two foot clean soil fill cover at the parking lot with asphalt cover
(2) Soil Vapor Barrier System
(3) Passive Sub-Slab Depressurization System

Composite Cover System

Exposure to residual soil/fill will be prevented by an engineered, composite cover system to be built on the Site. This composite cover system will be comprised of 2-feet of clean cover soil at the parking lot, asphalt cover, and concrete building slabs (at least 4" thick).
Appendix 1 details the proposed development plans with foundation details.
The composite cover system is a permanent engineering control for the Site.

The system will be inspected and its performance certified at specified intervals as required by this RAWP and the Site Management Plan. A Soil and Materials Management Plan will be included in the Site Management Plan and will outline the procedures to be followed in the event that the composite cover system and underlying residual soil/fill is disturbed after the remedial action is complete. Maintenance of this composite cover system will be described in the Site Management Plan in the Remedial Action Report.

Vapor Barrier System

Migration of soil vapor from onsite or offsite sources into the building will be mitigated with a combination of building slab and vapor barrier. The vapor barrier will consist of a Raven Industries' Vapor Block Plus (20-mil) vapor barrier (or equivalent) is proposed to be installed beneath the building and along the below grade sidewalls. Layout of the vapor barrier system is included as Figure 2. The membrane will act as a vapor barrier to prevent the potential future vapor migration into the planned building structures. Manufacturer's specifications for the Raven Industries' Vapor Block Plus (20-mil) membrane, including permeability and chemical resistance information is provided in Appendix 4. The membrane will be installed beneath the cellar and slab-on-grade portions of the building and will be installed over a sub grade free of sharp rocks, roots or other protrusions, which may cause puncturing.
Seams will be sealed using fabrication tape supplied by the manufacturer or by other means approved in writing by the manufacturer of vapor barrier. Pipes and other penetrations will be sealed by vapor barrier manufacturer approved methods. All methods of sealing shall be approved by an Engineer prior to installation. In addition, the manufacturer will also provide a letter indicating that the barrier is suitable to act as both a moisture and vapor barrier and will be

resistant to soil contaminants. The vapor barrier system is a permanent engineering control for the Site.

The vapor barrier will extend throughout the area occupied by the footprint of the new building and up the foundation sidewalls and will be installed in accordance with manufacturer specifications.

A plan view showing the location of the proposed vapor barrier system is provided in Figure 2. Typical design sections for the vapor barrier on slab and sidewalls are provided in Appendix 6. Product specification sheets are provided in Appendix 4. The Remedial Action Report will include as-built drawings and diagrams; manufacturer documentation; and photographs.

Sub-Slab Depressurization System

Migration of soil vapor into the building will be mitigated with the construction of passive sub-slab depressurization system will be designed to maintain negative pressure beneath the entire area of the building slab addressed by this RAP. The Remedial Closure Report will include photographs of the installation of SSDS laterals as well as if any deviations have occurred due to construction scope changes. The Remedial Closure Report will include PE/RA certified as-built plans depicting SSDS lateral, and riser pipe configuration and locations, as well as documentation proving that the active SSDS was appropriately designed to maintain negative pressure beneath the entire area of the building slab.

The SSDS is a permanent engineering control. The system will be inspected and its performance certified at specified intervals as required by this RAWP and the Site Management Plan. Maintenance of this SSDS will be described in the Site Management Plan in the Remedial Action Report. The location and layout of the SSDS is included as Figure 5.

4.4 Institutional Controls

This property will achieve Track 4 Site specific SCOs and series of Institutional Controls are required to assure permanent protection of public health by elimination of exposure to residual materials. These IC's define the program to operate, maintain, inspect and certify the performance of Engineering Controls and Institutional Controls on this property. Institutional

Controls would be implemented in accordance with a Site Management Plan included in the final Remedial Action Report (RAR). Institutional Controls would be:

- Continued registration of the E-Designation E-138 for the property. This RAWP includes a description of all ECs and ICs and summarizes the requirements of the SMP which will note that the property owner and property owner's successors and assigns must comply with the approved SMP;
- Vegetable gardens and farming on the Site are prohibited in contact with residual soil materials;
- Use of groundwater underlying the Site is prohibited without treatment rendering it safe for its intended use;
- All future activities on the Site that will disturb residual material must be conducted pursuant to the soil management provisions in an approved SMP; and
- The Site will be used for residential and commercial use and will not be used for a higher level of use without prior approval by OER.

4.5 Site Management Plan

Site Management is the last phase of remediation and begins with the approval of the Remedial Action Report and issuance of the Notice of Completion (NOC) for the Remedial Action. The Site Management Plan (SMP) describes appropriate methods and procedures to ensure implementation of all ECs and ICs that are required by this RAWP. The Site Management Plan is submitted as part of the RAR but will be written in a manner that allows its use as an independent document. Site Management continues until terminated in writing by OER. The property owner is responsible to ensure that all Site Management responsibilities defined in the Site Management Plan are implemented.

The SMP will provide a detailed description of the procedures required to manage residual soil/fill left in place following completion of the remedial action in accordance with the Voluntary Cleanup Agreement with OER. This includes a plan for: (1) implementation of EC's and ICs; (2) operation and maintenance of EC's; (3) inspection and certification of IC's and EC's.

Site management activities and EC/IC certification will be scheduled by OER on a periodic basis to be established in the RAR and the SMP and will be subject to review and modification by OER. The Site Management Plan will be based on a calendar year and certification reports will be due for submission to OER by July 30 of the year following the reporting period.

4.6 Qualitative Human Health Exposure Assessment

The objective of the qualitative exposure assessment is to identify potential receptors and pathways for human exposure to the contaminants of concern (COC) that are present at, or migrating from, the Site. The identification of exposure pathways describes the route that the COC takes to travel from the source to the receptor. An identified pathway indicates that the potential for exposure exists; it does not imply that exposures actually occur.

Data and information reported in the Remedial Investigation Report (RIR) are sufficient to complete a Qualitative Human Health Exposure Assessment (QHHEA) for this project. As part of the VCP process, a QHHEA was performed to determine whether the Site poses an existing or future health hazard to the Site's exposed or potentially exposed population. The sampling data from the RI were evaluated to determine whether there is any health risk under current and future conditions by characterizing the exposure setting, identifying exposure pathways, and evaluating contaminant fate and transport. This QHHEA was prepared in accordance with Appendix 3B and Section 3.3 (b) 8 of the NYSDEC Draft DER-10 Technical Guidance for Site Investigation and Remediation.

Known and Potential Contaminant Sources

Soil boring sample results for both the August 2014 EBC Investigation and the November 2015 CES Investigation were compared to NYSDEC Unrestricted Use Soil Cleanup Objectives (UUSCOs) and Restricted Residential Use Soil Cleanup Standards (RRSCOs) as presented in 6NYCRR Part 375-6.8. See Figure 5 and 6 for a summary of CES soil analytical and Appendix E for Historic Environmental Reports, including the August 2014 EBC Investigation. A summary of results from both investigations is as follows.

- One VOC, Acetone (a common laboratory contaminant) during the EBC Investigation was detected above its UUSCO (maximum of 190 µg/kg) (EBC).
- One PCB, PCB 1254 was detected in one shallow soil sample SB-3 (0'-5') at 170 µg/kg, above UUSCOs (CES). The laboratory did also identify matrix spike and diluted detections of PCBs in samples SB-1(0'-2'), SB-2(0'-2'), SB-6 (0'-2'). The dilutions performed by the laboratory were up to 20x normal limits for the testing equipment. CES in discussion with the laboratory confirmed the probable presence of low level PCBs in these samples. The exact concentration could not be estimated by the laboratory.
- Several SVOCs including benz(a)anthracene (max of 4,100 µg/kg), benzo(a)pyrene (max of 3,600 µg/kg), benzo(b)fluoranthene (max of 3,900 µg/kg), benzo(k)fluoranthene (max of 2,600 µg/kg), chrysene (max of 4,400 µg/kg), dibenzo(a,h)anthracene (4,500 µg/kg), and indeno(1,2,3-cd)pyrene (max of 1,900 µg/kg) were detected above UUSCOs and RRSCOs in 4 of the 6 shallow samples (CES).
- Two pesticides 4,4'-DDD (43 µg/kg) and 4,4'-DDT (61 µg/kg) were detected above UUSCOs in shallow soil sample SB-6 (0'-2') (CES).
- Several metals including arsenic (EBC) (max of 108 mg/kg), barium (EBC) (max of 2.730 mg/kg), cadmium (EBC) (max of 42.7 mg/kg), chromium (CES) (max of 224 mg/kg), copper (CES) (max of 1160 mg/kg), lead (CES) (max of 5,540 mg/kg), mercury (EBC) (max of 30.9mg/kg), nickel (EBC) (max of 323 mg/kg), silver (EBC) (max of 7.29 mg/kg) and zinc (CES) (max of 5,710 mg/kg) were detected above UUSCOs in all soil samples except for SB-4 (5'-7'). Of these, all exceeded RRSCOs with the exception of silver. Metals in SB-6 (2'-4') exceeded UUSCOs but did not exceed RRSCOs. Highest concentrations of metals were consistently detected in shallow sample SB-1 (0'-2') (CES) in the southwestern-most area of the Site adjacent to the sidewalk area.

Groundwater samples results were compared to New York State 6NYCRR Part 703.5 Class GA groundwater quality standards (GQS). See Appendix 7 for a summary of groundwater analytical as detailed in previous reports.

- Groundwater samples did not exhibit concentrations of VOCs, PCBs, or Pesticides above Class GA GQS.
- SVOCs including Benzo (a) anthracene, Benzo (a) pyrene, Benzo (b) fluoranthene Benzo (k) fluoranthene, Chrysene, and Indeno (1,2,3-cd) pyrene were detected above Class GA GQS in groundwater beneath the site.
- Several metals were identified and aluminium, iron, manganese and sodium exceeded their GQSs in dissolved water samples.

Soil vapor results collected during the Subsurface Investigation were compared to the compounds listed in the Indoor Air Guidance Values and the Vapor Intrusion Matrices 1 and 2 detailed in the New York State Department of Health (NYSDOH) Final Guidance for Evaluating Soil Vapor Intrusion, dated October 2006. 1,1,1-TCA was detected in two of four samples at a maximum concentration of 12.3 µg/m3. PCE was detected in all four samples at a maximum concentration of 55.9 µg/m3. TCE was detected in one sample at 4.23 µg/m3. Total BTEX concentrations ranged from 2.84 µg/m3 (CES-1) to 41.77 µg/m3 (CES-2).

Nature, Extent, Fate and Transport of Contaminants

Soil boring sample results for both the August 2014 EBC Investigation and the November 2015 CES Investigation were compared to NYSDEC Unrestricted Use Soil Cleanup Objectives (UUSCOs) and Restricted Residential Use Soil Cleanup Standards (RRSCOs) as presented in 6NYCRR Part 375-6.8. See Figure 5 and 6 for a summary of CES soil analytical and Appendix E for Historic Environmental Reports, including the August 2014 EBC Investigation. A summary of results from both investigations is as follows.

- One VOC, Acetone (a common laboratory contaminant) during the EBC Investigation was detected above its UUSCO (maximum of 190 µg/kg) (EBC).
- One PCB, PCB 1254 was detected in one shallow soil sample SB-3 (0'-5') at 170 µg/kg, above UUSCOs (CES). The laboratory did also identify matrix spike and diluted detections of PCBs in samples SB-1(0'-2'), SB-2(0'-2'), SB-6 (0'-2'). The dilutions performed by the laboratory were up to 20x normal limits for the testing equipment. CES

in discussion with the laboratory confirmed the probable presence of low level PCBs in these samples. The exact concentration could not be estimated by the laboratory.

- Several SVOCs including benz(a)anthracene (max of 4,100 µg/kg), benzo(a)pyrene (max of 3,600 µg/kg), benzo(b)fluoranthene (max of 3,900 µg/kg), benzo(k)fluoranthene (max of 2,600 µg/kg), chrysene (max of 4,400 µg/kg), dibenzo(a,h)anthracene (4,500 µg/kg), and indeno(1,2,3-cd)pyrene (max of 1,900 µg/kg) were detected above UUSCOs and RRSCOs in 4 of the 6 shallow samples (CES).
- Two pesticides 4,4'-DDD (43 µg/kg) and 4,4'-DDT (61 µg/kg) were detected above UUSCOs in shallow soil sample SB-6 (0'-2') (CES).
- Several metals including arsenic (EBC) (max of 108 mg/kg), barium (EBC) (max of 2.730 mg/kg), cadmium (EBC) (max of 42.7 mg/kg), chromium (CES) (max of 224 mg/kg), copper (CES) (max of 1160 mg/kg), lead (CES) (max of 5,540 mg/kg), mercury (EBC) (max of 30.9mg/kg), nickel (EBC) (max of 323 mg/kg), silver (EBC) (max of 7.29 mg/kg) and zinc (CES) (max of 5,710 mg/kg) were detected above UUSCOs in all soil samples except for SB-4 (5'-7'). Of these, all exceeded RRSCOs with the exception of silver. Metals in SB-6 (2'-4') exceeded UUSCOs but did not exceed RRSCOs. Highest concentrations of metals were consistently detected in shallow sample SB-1 (0'-2') (CES) in the southwestern-most area of the Site adjacent to the sidewalk area.
    - Overall, the soil results were consistent with data identified at sites with historic fill material in NYC.

Groundwater samples results were compared to New York State 6NYCRR Part 703.5 Class GA groundwater quality standards (GQS). See Appendix 7 for a summary of groundwater analytical.

- Groundwater samples did not exhibit concentrations of VOCs, PCBs, or Pesticides above Class GA GQS.
- SVOCs including Benzo (a) anthracene (max of 0.4 µg/L), Benzo (a) pyrene (max of 0.35 µg/L), Benzo (b) fluoranthene (max of 0.32 µg/L), Benzo (k) fluoranthene (max of 0.27 µg/L), Chrysene (max of 0.38 µg/L), and Indeno (1,2,3-cd) pyrene (max of 0.16µg/L) were detected above Class GA GQS in groundwater beneath the site.

- Dissolved metals including Aluminum (max of 0.187 mg/L), Iron (max of 1.28 mg/L), Manganese (max of 2.01 mg/L), and Sodium (max of 32.2 mg/L) were detected above Class GA GQS in groundwater beneath the site.
- Total metals including Aluminum (max of 27.2 mg/L), Iron (max of 36.9 mg/L), Lead (max of 0.187 mg/L), Manganese (max of 2.17 mg/L), and Sodium (max of 33.9 mg/L) were detected above Class GA GQS in groundwater beneath the site.
- The detections are indicative of poor quality non potable water common in NYC and is not indicative of any type or groundwater source of contamination.

Soil vapor results collected during the Subsurface Investigation were compared to the compounds listed in the Indoor Air Guidance Values and the Vapor Intrusion Matrices 1 and 2 detailed in the New York State Department of Health (NYSDOH) Final Guidance for Evaluating Soil Vapor Intrusion, dated October 2006.

- None of the compounds exceeded the Indoor Air Guidance Values. None of the compounds applicable to Soil Vapor Matrix 1 exceeded the 50 µg/m3 threshold that would require any further action.
- None of the compounds applicable to Soil Vapor Matrix 2 exceeded the 100 µg/m3 threshold that would require any further action.
- Soil vapor results concluded that analytical detections were below concentrations that would trigger any further action in accordance with State NYS DOH soil vapor guidance matrices 1 and 2.

Receptor Populations

On-Site Receptors: The site is currently uninhabited, vacant and undeveloped and access to the Site is restricted by an 8 foot high, chained and locked, perimeter fence. Onsite receptors are limited to trespassers, site representatives and visitors granted access to the property. During construction, potential on-site receptors include construction workers, site representatives, and visitors. Under proposed future conditions, potential on-site receptors include adult and child building residents, workers and visitors.

Off-Site Receptors: Potential off-site receptors within a 500 foot radius of the Site include adult and child residents; commercial and construction workers; pedestrians; and trespassers based on the following land uses within 500 feet of the Site:

1. Commercial Businesses – existing and future
2. Residential Buildings – existing and future
3. Building Construction/ Renovation – existing and future
4. Pedestrians, Trespassers, Cyclists – existing and future
5. Schools – existing and future

Potential Routes of Exposure

Three potential primary routes exist by which chemicals can enter the body: ingestion, inhalation, and dermal absorption. Exposure can occur based on the following potential media:

- Ingestion of groundwater or fill/ soil;
- Inhalation of vapors or particulates; and
- Dermal absorption of groundwater or fill/ soil.

Potential Exposure Points

Current Conditions: The site is currently uncapped with potential exposure pathways from ingestion, inhalation, or dermal absorption of soil/ fill. Groundwater is not exposed at the site. The site is served by the public water supply and groundwater is not used at the site for potable supply and there is no potential for exposure. Because the site is currently undeveloped, there is no potential for soil vapor to accumulate on site.

Construction/ Remediation Conditions: During the remedial action, onsite workers will come into direct contact with surface and subsurface soils as a result of on-Site construction and excavation activities. On-Site construction workers potentially could ingest, inhale or have dermal contact with exposed impacted soil and fill. Similarly, off-Site receptors could be exposed to dust and vapors from on-Site activities. Due to the depth of groundwater, direct contact with groundwater is not expected. During construction, on-Site and off-Site exposures to contaminated dust from on-Site will be addressed through the Soil/Materials Management Plan,

dust controls, and through the implementation of the Community Air-Monitoring Program and a Construction Health and Safety Plan.

Proposed Future Conditions: Under future remediated conditions, all soils in excess of Track 4 SCOs will be removed. The site will be fully capped, preventing potential direct exposure to soil and groundwater remaining in place, and engineering controls (vapor barrier/passive SSDS) will prevent any potential exposure due to inhalation by preventing soil vapor intrusion. The site is served by the public water supply, and groundwater is not used at the site. There are no plausible off-site pathways for oral, inhalation, or dermal exposure to contaminants derived from the site.

Overall Human Health Exposure Assessment

There are potential complete exposure pathways for the current site condition. There are potential complete exposure pathways that require mitigation during implementation of the remedy. There are no complete exposure pathways under future conditions after the site is developed. This assessment takes into consideration the reasonably anticipated use of the site, which includes a residential structure, site-wide surface cover, and a subsurface vapor barrier system for the building. Under current conditions, on-Site exposure pathways exist for those with access to the Site and trespassers. During remedial construction, on-Site and off-Site exposures to contaminated dust from historic fill material will be addressed through dust controls, and through the implementation of the Community Air Monitoring Program, the Soil/Materials Management Plan, and a Construction Health and Safety Plan. Potential post-construction use of groundwater is not considered an option because groundwater in this area of New York City is not used as a potable water source. There are no surface waters in close proximity to the Site that could be impacted or threatened.

5.0 Remedial Action Management

5.1 Project Organization and Oversight

Principal personnel who will participate in the remedial action include Michael Rattacasa and Craig Puerta, PE. The Professional Engineer (PE) and Qualified Environmental Professionals (QEP) for this project are Craig Puerta, PE, and Michael Rattacasa, respectively.

5.2 Site Security

Site access will be controlled by gated entrances to the fenced property.

5.3 Work Hours

The hours for operation of cleanup (7:00 AM to 4:00 PM) will comply with the NYC Department of Buildings construction code requirements or according to specific variances issued by that agency. The hours of operation will be conveyed to OER during the pre-construction meeting.

5.4 Construction Health and Safety Plan

The Health and Safety Plan is included in Appendix 2. The Site Safety Coordinator will be Michael Rattacasa. Remedial work performed under this RAWP will be in full compliance with applicable health and safety laws and regulations, including Site and OSHA worker safety requirements and HAZWOPER requirements. Confined space entry, if any, will comply with OSHA requirements and industry standards and will address potential risks. The parties performing the remedial construction work will ensure that performance of work is in compliance with the HASP and applicable laws and regulations. The HASP pertains to remedial and invasive work performed at the Site until the issuance of the Notice of Completion.

All field personnel involved in remedial activities will participate in training required under 29 CFR 1910.120, such as 40-hour hazardous waste operator training and annual 8-hour refresher training. Site Safety Officer will be responsible for maintaining workers training records.

Personnel entering any exclusion zone will be trained in the provisions of the HASP and will comply with all requirements of 29 CFR 1910.120. Site-specific training will be provided to field personnel. Additional safety training may be added depending on the tasks performed. Emergency telephone numbers will be posted at the site location before any remedial work begins. A safety meeting will be conducted before each shift begins. Topics to be discussed include task hazards and protective measures (physical, chemical, environmental); emergency procedures; PPE levels and other relevant safety topics. Meetings will be documented in a log book or specific form.

An emergency contact sheet with names and phone numbers is included in the CHASP. That document will define the specific project contacts for use in case of emergency.

5.5 Community Air Monitoring Plan

Real-time air monitoring for volatile organic compounds (VOCs) and particulate levels at the perimeter of the exclusion zone or work area will be performed. Continuous monitoring will be performed for all ground intrusive activities and during the handling of contaminated or potentially contaminated media. Ground intrusive activities include, but are not limited to, soil/waste excavation and handling, test pit excavation or trenching, and the installation of soil borings or monitoring wells.

Periodic monitoring for VOCs will be performed during non-intrusive activities such as the collection of soil and sediment samples or the collection of groundwater samples from existing monitoring wells. Periodic monitoring during sample collection, for instance, will consist of taking a reading upon arrival at a sample location, monitoring while opening a well cap or overturning soil, monitoring during well bailing/purging, and taking a reading prior to leaving a sample location. Depending upon the proximity of potentially exposed individuals, continuous monitoring may be performed during sampling activities. Examples of such situations include groundwater sampling at wells on the curb of a busy urban street, in the midst of a public park, or adjacent to a school or residence. Exceedences of action levels observed during performance of the Community Air Monitoring Plan (CAMP) will be reported to the OER Project Manager and included in the Daily Report.

VOC Monitoring, Response Levels, and Actions

Volatile organic compounds (VOCs) will be monitored at the downwind perimeter of the immediate work area (i.e., the exclusion zone) on a continuous basis during invasive work. Upwind concentrations will be measured at the start of each workday and periodically thereafter to establish background conditions. The monitoring work will be performed using equipment appropriate to measure the types of contaminants known or suspected to be present. The equipment will be calibrated at least daily for the contaminant(s) of concern or for an appropriate surrogate. The equipment will be capable of calculating 15-minute running average concentrations, which will be compared to the levels specified below.

- If the ambient air concentration of total organic vapors at the downwind perimeter of the work area or exclusion zone exceeds 5 parts per million (ppm) above background for the 15-minute average, work activities will be temporarily halted and monitoring continued. If the total organic vapor level readily decreases (per instantaneous readings) below 5 ppm over background, work activities will resume with continued monitoring.
- If total organic vapor levels at the downwind perimeter of the work area or exclusion zone persist at levels in excess of 5 ppm over background but less than 25 ppm, work activities will be halted, the source of vapors identified, corrective actions taken to abate emissions, and monitoring continued. After these steps, work activities will resume provided that the total organic vapor level 200 feet downwind of the exclusion zone or half the distance to the nearest potential receptor or residential/commercial structure, whichever is less - but in no case less than 20 feet, is below 5 ppm over background for the 15-minute average.
- If the organic vapor level is above 25 ppm at the perimeter of the work area, activities will be shutdown.

All 15-minute readings must be recorded and be available for OER personnel to review. Instantaneous readings, if any, used for decision purposes will also be recorded.

Particulate Monitoring, Response Levels, and Actions

Particulate concentrations will be monitored continuously at the upwind and downwind perimeters of the exclusion zone at temporary particulate monitoring stations. The particulate monitoring will be performed using real-time monitoring equipment capable of measuring

particulate matter less than 10 micrometers in size (PM-10) and capable of integrating over a period of 15 minutes (or less) for comparison to the airborne particulate action level. The equipment will be equipped with an audible alarm to indicate exceedance of the action level. In addition, fugitive dust migration should be visually assessed during all work activities.

- If the downwind PM-10 particulate level is 100 micrograms per cubic meter (mcg/m3) greater than background (upwind perimeter) for the 15-minute period or if airborne dust is observed leaving the work area, then dust suppression techniques will be employed. Work will continue with dust suppression techniques provided that downwind PM-10 particulate levels do not exceed 150 mcg/m3 above the upwind level and provided that no visible dust is migrating from the work area.
- If, after implementation of dust suppression techniques, downwind PM-10 particulate levels are greater than 150 mcg/m3 above the upwind level, work will be stopped and a re-evaluation of activities initiated. Work will resume provided that dust suppression measures and other controls are successful in reducing the downwind PM-10 particulate concentration to within 150 mcg/m3 of the upwind level and in preventing visible dust migration.

All readings will be recorded and be available for OER personnel to review.

5.6 Agency Approvals

All permits or government approvals required for remedial construction have been or will be obtained prior to the start of remedial construction. Approval of this RAWP by OER does not constitute satisfaction of these requirements and will not be a substitute for any required permit.

5.7 Site Preparation

Pre-Construction Meeting

OER will be invited to attend the pre-construction meeting at the Site with all parties involved in the remedial process prior to the start of remedial construction activities.

Mobilization

Mobilization will be conducted as necessary for each phase of work at the Site. Mobilization includes field personnel orientation, equipment mobilization (including securing all sampling

equipment needed for the field investigation), marking/staking sampling locations and utility mark-outs. Each field team member will attend an orientation meeting to become familiar with the general operation of the Site, health and safety requirements, and field procedures.

Utility Marker Layouts, Easement Layouts

The presence of utilities and easements on the Site will be fully investigated prior to the performance of invasive work such as excavation or drilling under this plan by using, at a minimum, the One-Call System (811). Underground utilities may pose an electrocution, explosion, or other hazard during excavation or drilling activities. All invasive activities will be performed incompliance with applicable laws and regulations including NYC Building Code to assure safety. Utility companies and other responsible authorities will be contacted to locate and mark the locations, and a copy of the Mark-Out Ticket will be retained by the contractor prior to the start of drilling, excavation or other invasive subsurface operations. Overhead utilities may also be present within the anticipated work zones. Electrical hazards associated with drilling in the vicinity of overhead utilities will be prevented by maintaining a safe distance between overhead power lines and drill rig masts.

Proper safety and protective measures pertaining to utilities and easements, and compliance with all laws and regulations will be employed during invasive and other work contemplated under this RAWP. The integrity and safety of on-Site and off-Site structures will be maintained during all invasive, excavation or other remedial activity performed under the RAWP.

Dewatering

Dewatering may be encountered during remediation and construction. All water encountered during construction processes will be disposed of at the closest NYC sewer inlet. All permits for the disposal will be obtained from the New York City DEP and will meet the NYCDEP's effluent criteria.

Equipment and Material Staging

Equipment and materials will be stored and staged in a manner that complies with applicable laws and regulations. The location of proposed equipment and material staging areas, truck

inspection station, stockpile areas, and other pertinent remedial management features will vary depending on the project phase.

Stabilized Construction Entrance

Steps will be taken to ensure that trucks departing the site will not track soil, fill or debris off-Site. Such actions may include use of cleaned asphalt or concrete pads or use of stone or other aggregate-based egress paths between the truck inspection station and the property exit. Measures will be taken to ensure that adjacent roadways will be kept clean of project related soils, fill and debris.

Truck Inspection Station

An outbound-truck inspection station will be set up close to the Site exit. Before exiting the Site, trucks will be required to stop at the truck inspection station and will be examined for evidence of contaminated soil on the undercarriage, body, and wheels. Soil and debris will be removed. Brooms, shovels and clean water will be utilized for the removal of soil from vehicles and equipment, as necessary.

Extreme Storm Preparedness and Response Contingency Plan

Damage from flooding or storm surge can include dislocation of soil and stockpiled materials, dislocation of site structures and construction materials and equipment, and dislocation of support of excavation structures. Damage from wind during an extreme storm event can create unsafe or unstable structures, damage safety structures and cause downed power lines creating dangerous site conditions and loss of power. In the event of emergency conditions caused by an extreme storm event, the enrollee will undertake the following steps for site preparedness prior to the event and response after the event.

Storm Preparedness

Preparations in advance of an extreme storm event will include the following: containerized hazardous materials and fuels will be removed from the property; loose materials will be secured to prevent dislocation and blowing by wind or water; heavy equipment such as excavators and generators will be removed from excavated areas, trenches and depressions on the property to high ground or removed from the property; an inventory of the property with photographs will be

performed to establish conditions for the site and equipment prior to the event; stockpile covers for soil and fill will be secured by adding weights such as sandbags for added security and worn or ripped stockpile covers will be replaced with competent covers; stockpiled hazardous wastes will be removed from the property; stormwater management systems will be inspected and fortified, including, as necessary: clean and reposition silt fences, hay bales; clean storm sewer filters and traps; and secure and protect pumps and hosing.

Storm Response

At the conclusion of an extreme storm event, as soon as it is safe to access the property, a complete inspection of the property will be performed. A site inspection report will be submitted to OER at the completion of site inspection and after the site security is assessed. Site conditions will be compared to the inventory of site conditions and material performed prior to the storm event and significant differences will be noted. Damage from storm conditions that result in acute public safety threats, such as downed power lines or imminent collapse of buildings, structures or equipment will be reported to public safety authorities via appropriate means such as calling 911. Petroleum spills will be reported to NYS DEC within 2 hours of identification and consistent with State regulations. Emergency and spill conditions will also be reported to OER. Public safety structures, such as construction security fences will be repaired promptly to eliminate public safety threats. Debris will be collected and removed. Dewatering will be performed in compliance with existing laws and regulations and consistent with emergency notifications, if any, from proper authorities. Eroded areas of soil including unsafe slopes will be stabilized and fortified. Dislocated materials will be collected and appropriately managed. Support of excavation structure will be inspected and fortified as necessary. Impacted stockpiles will be contained and damaged stockpile covers will be replaced. Stormwater control systems and structures will be inspected and maintained as necessary. If soil or fill materials are discharged off site to adjacent properties, property owners and OER will be notified and corrective measure plan designed to remove and clean dislocated material will be submitted to OER and implemented following approval by OER and granting of site access by the property owner. Impacted offsite areas may require characterization based on site conditions, at the discretion of OER. If onsite petroleum spills are identified, a qualified environmental professional will determine the nature and extent of the spill and report to NYS DEC's spill

hotline at DEC 800-457-7362 within statutory defined timelines. If the source of the spill is ongoing and can be identified, it should be stopped if this can be done safely. Potential hazards will be addressed immediately, consistent with guidance issued by NYS DEC.

Storm Response Reporting

A site inspection report will be submitted to OER at the completion of site inspection. An inspection report established by OER is available on OER's website (www.nyc.gov/oer) and will be used for this purpose. Site conditions will be compared to the inventory of site conditions and material performed prior to the storm event and significant differences will be noted. The site inspection report will be sent to the OER project manager and will include the site name, address, tax block and lot, site primary and alternate contact name and phone number. Damage and soil release assessment will include: whether the project had stockpiles; whether stockpiles were damaged; photographs of damage and notice of plan for repair; report of whether soil from the site was dislocated and whether any of the soil left the site; estimates of the volume of soil that left the site, nature of impact, and photographs; description of erosion damage; description of equipment damage; description of damage to the remedial program or the construction program, such as damage to the support of excavation; presence of onsite or offsite exposure pathways caused by the storm; presence of petroleum or other spills and status of spill reporting to NYS DEC; description of corrective actions; schedule for corrective actions. This report should be completed and submitted to OER project manager with photographs within 24 hours of the time of safe entry to the property after the storm event.

5.8 Traffic Control

Drivers of trucks leaving the Site with soil/fill will be instructed to proceed without stopping in the vicinity of the Site to prevent neighborhood impacts. The planned route on local roads for trucks leaving the site is to travel north on Union Avenue, east on Richardson Street, then approach Meeker Avenue to enter the Brooklyn-Queens Expressway (BQE).

5.9 Demobilization

Demobilization will include:

- As necessary, restoration of temporary access areas and areas that may have been disturbed to accommodate support areas (e.g., staging areas, decontamination areas, storage areas, temporary water management areas, and access area);
- Removal of sediment from erosion control measures and truck wash and disposal of materials in accordance with applicable laws and regulations;
- Equipment decontamination, and;
- General refuse disposal.

Equipment will be decontaminated and demobilized at the completion of all field activities. Investigation equipment and large equipment (e.g., soil excavators) will be washed at the truck inspection station as necessary. In addition, all investigation and remediation derived waste will be appropriately disposed.

5.10 Reporting and Record Keeping

Daily reports

Daily reports providing a general summary of activities for each day of active remedial work will be emailed to the OER Project Manager by the end of the business week. Those reports will include:

- Project number and statement of the activities and an update of progress made and locations of excavation and other remedial work performed;
- Quantities of material imported and exported from the Site;
- Status of on-Site soil/fill stockpiles;
- A summary of all citizen complaints, with relevant details (basis of complaint; actions taken; etc.);
- A summary of CAMP results noting all excursions. CAMP data may be reported;
- Photograph of notable Site conditions and activities.

The frequency of the reporting period may be revised in consultation with OER project manager based on planned project tasks. Daily email reports are not intended to be the primary mode of communication for notification to OER of emergencies (accidents, spills), requests for changes to the RAWP or other sensitive or time critical information. However, such information will be included in the daily reports. Emergency conditions and changes to the RAWP will be

communicated directly to the OER project manager by personal communication. Daily reports will be included as an Appendix in the Remedial Action Report.

Record Keeping and Photo Documentation

Job-site record keeping for all remedial work will be performed. These records will be maintained on-Site during the project and will be available for inspection by OER staff. Representative photographs will be taken of the Site prior to any remedial activities and during major remedial activities to illustrate remedial program elements and contaminant source areas. Photographs will be submitted at the completion of the project in the RAR in digital format (i.e. jpeg files).

5.11 Complaint Management

All complaints from citizens will be promptly reported to OER. Complaints will be addressed and outcomes will also be reported to OER in daily reports. Notices to OER will include the nature of the complaint, the party providing the complaint, and the actions taken to resolve any problems.

5.12 Deviations From The Remedial Action Work Plan

All changes to the RAWP will be reported to, and approved by, the OER Project Manager and will be documented in daily reports and reported in the Remedial Action Report. The process to be followed if there are any deviations from the RAWP will include a request for approval for the change from OER noting the following:

- Reasons for deviating from the approved RAWP;
- Effect of the deviations on overall remedy; and
- Determination with basis that the remedial action with the deviation(s) is protective of public health and the environment.

6.0 Remedial Action Report

A Remedial Action Report (RAR) will be submitted to OER following implementation of the remedial action defined in this RAWP. The RAR will document that the remedial work required

under this RAWP has been completed and has been performed in compliance with this plan. The RAR will include:

- Information required by this RAWP;
- As-built drawings for all constructed remedial elements;
- Manifests for all soil or fill disposal;
- Photographic documentation of remedial work performed under this remedy;
- Site Management Plan ;
- Description of any changes in the remedial action from the elements provided in this RAWP and associated design documents;
- Tabular summary of all end point sampling results (including all soil test results from the remedial investigation for soil that will remain on site) and all soil/fill waste characterization results, QA/QC results for end-point sampling, and other sampling and chemical analysis performed as part of the remedial action;
- Test results or other evidence demonstrating that remedial systems are functioning properly;
- Account of the source area locations and characteristics of all soil or fill material removed from the Site including a map showing the location of these excavations and hotspots, tanks or other contaminant source areas;
- Full accounting of the disposal destination of all contaminated material removed from the Site. Documentation associated with disposal of all material will include transportation and disposal records, and letters approving receipt of the material;
- Account of the origin and required chemical quality testing for material imported onto the Site;
- Continue registration of the property with an E-Designation E-138 by the NYC Department of Buildings;
- The RAWP and Remedial Investigation Report will be included as appendices to the RAR;
- Reports and supporting material will be submitted in digital form and final PDF's will include bookmarks for each appendix.

PE Stamp

Remedial Action Report Certification

I, Craig Puerta, P.E., am currently a registered professional engineer licensed by the State of New York. I performed professional engineering services and had primary direct responsibility for implementation of the remedial program for the 526 Union Avenue, Brooklyn, NY site, Site 16EHAZ063K & 16CVCP048K. I certify to the following:

- I have reviewed this document, to which my signature and seal are affixed.
- Engineering Controls implemented during this remedial action were designed by me or a person under my direct supervision and achieve the goals established in the Remedial Action Work Plan for this site.
- The Engineering Controls constructed during this remedial action were professionally observed by me or by a person under my direct supervision and (1) are consistent with the Engineering Control design established in the Remedial action Work Plan and (2) are accurately reflected in the text and drawings for as-built design reported in this Remedial Action Report.
- The OER-approved Remedial Action Work Plan dated December 14, 2015 and Stipulations in a letter dated December 14, 2015 were implemented and that all requirements in those documents have been substantively complied with. I certify that contaminated soil, fill, liquids or other material from the property were taken to facilities licensed to accept this material in full compliance with applicable laws and regulations.

Name

PE License Number

Signature

Date

I, Michael Rattacasa, am a Qualified Environmental Professional. I had primary direct responsibility for implementation of the remedial program for the 526 Union Avenue, Brooklyn, NY site, site number Site 16EHAZ063K & 16CVCP048K. I certify to the following:

- The OER-approved Remedial Action Work Plan dated December 14, 2015 and Stipulations in a letter dated December 14, 2015 were implemented and that all requirements in those documents have been substantively complied with. I certify that contaminated soil, fill, liquids or other material from the property were taken to facilities licensed to accept this material in full compliance with applicable laws and regulations.

QEP Name

QEP Signature

Date

7.0 Schedule

The table below presents a schedule for the proposed remedial action and reporting. If the schedule for remediation and development activities changes, it will be updated and submitted to OER. Currently, a seven month remediation period is anticipated.

Schedule Milestone	**Weeks from Remedial Action Start**	**Duration (weeks)**
OER Approval of RAWP	0	4
Fact Sheet 2 announcing start of remedy	4	8
Mobilization	1	9
Remedial Construction	12	21
Demobilization	1	22
Submit Remedial Action Report	4	26

FIGURES

WITHERS STREET

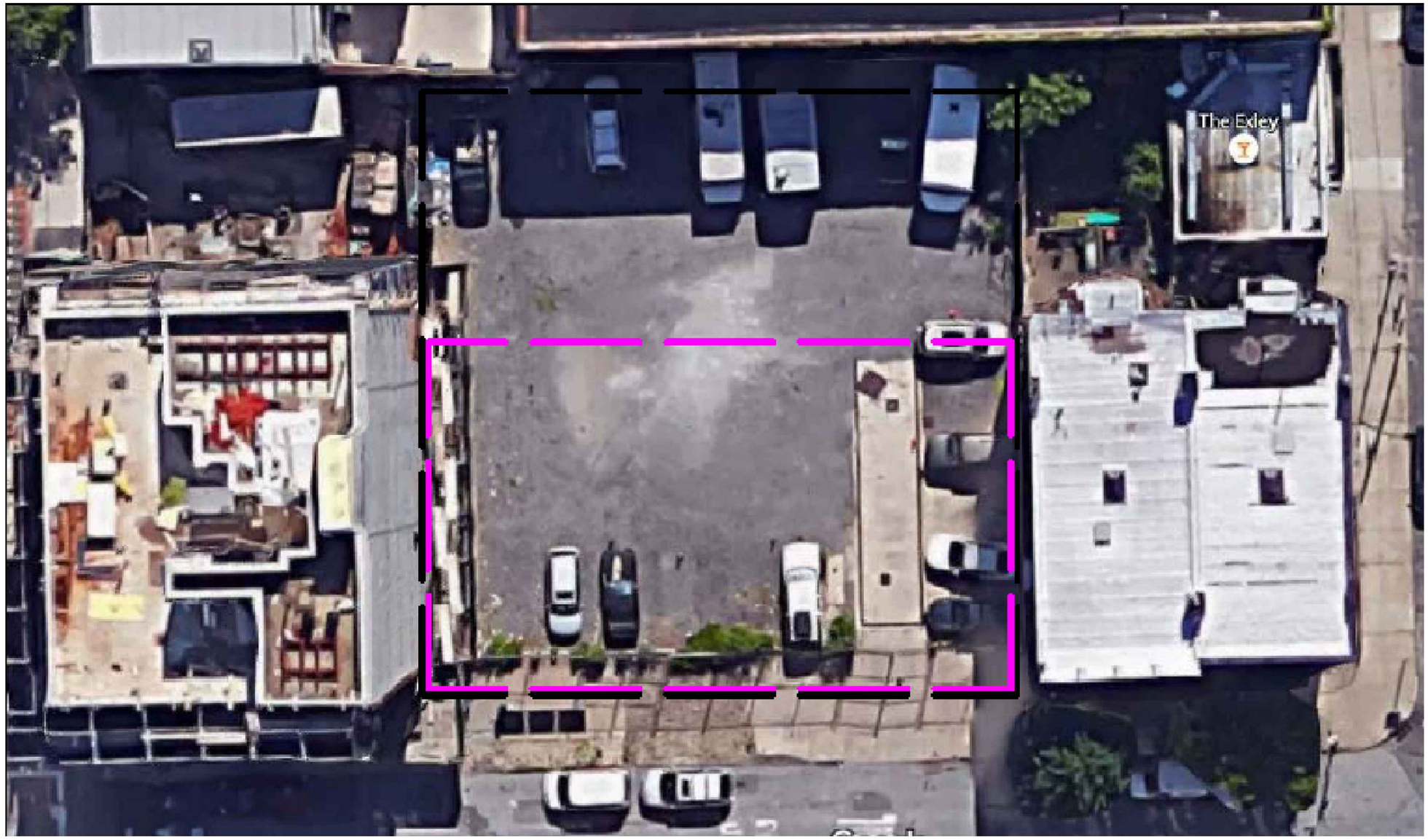

JACKSON STREET

UNION AVENUE

CREATIVE ENVIRONMENT SOLUTIONS (CES)
39 WEST 37TH STREET 14TH FLOOR
NEW YORK, NY 10018

CES

526 Union Ave
Brooklyn, NY 11211

Legend

- Property Line
- Proposed Building Footprint
- Existing Building

Comments:

Designer:	A. ARRIGO
Drawn by:	A. ARRIGO
Checked by:	C.PUERTA
Date:	December 14, 2015

Remedial Action Plan
Figure #1; Site Location Plan

Tryad Group
250 Greenpoint Avenue; Suite #4
Brooklyn, New York 11222

THE SKETCH IS FOR INFORMATIONAL PURPOSES ONLY
ALL QUANTITIES ARE TO BE FIELD VERIFIED

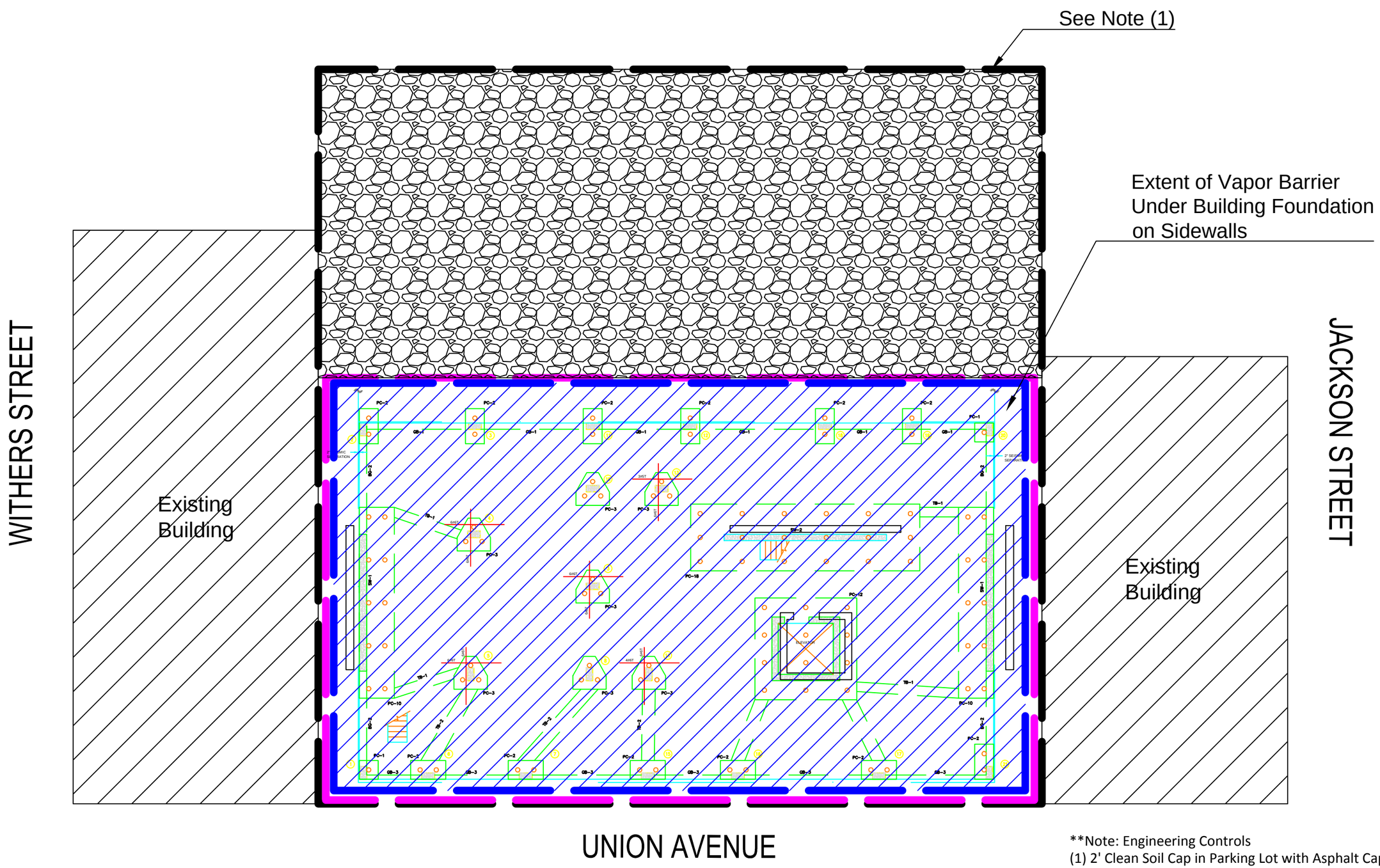

**Note: Engineering Controls
(1) 2' Clean Soil Cap in Parking Lot with Asphalt Cap
(2) Vapor Barrier
(3) Building Foundation

CREATIVE ENVIRONMENT SOLUTIONS (CES)
39 WEST 37TH STREET 14TH FLOOR
NEW YORK, NY 10018

526 Union Ave
Brooklyn, NY 11211

Legend

- Property Line
- Proposed Building Footprint
- Existing Building
- Vapor Barrier

Comments:

Designer:	A. ARRIGO
Drawn by:	A. ARRIGO
Checked by:	C.PUERTA
Date:	December 14, 2015

Remedial Action Plan
Figure #2; Location of Engineering Controls

Tryad Group
250 Greenpoint Avenue; Suite #4
Brooklyn, New York 11222

THE SKETCH IS FOR INFORMATIONAL PURPOSES ONLY
ALL QUANTITIES ARE TO BE FIELD VERIFIED

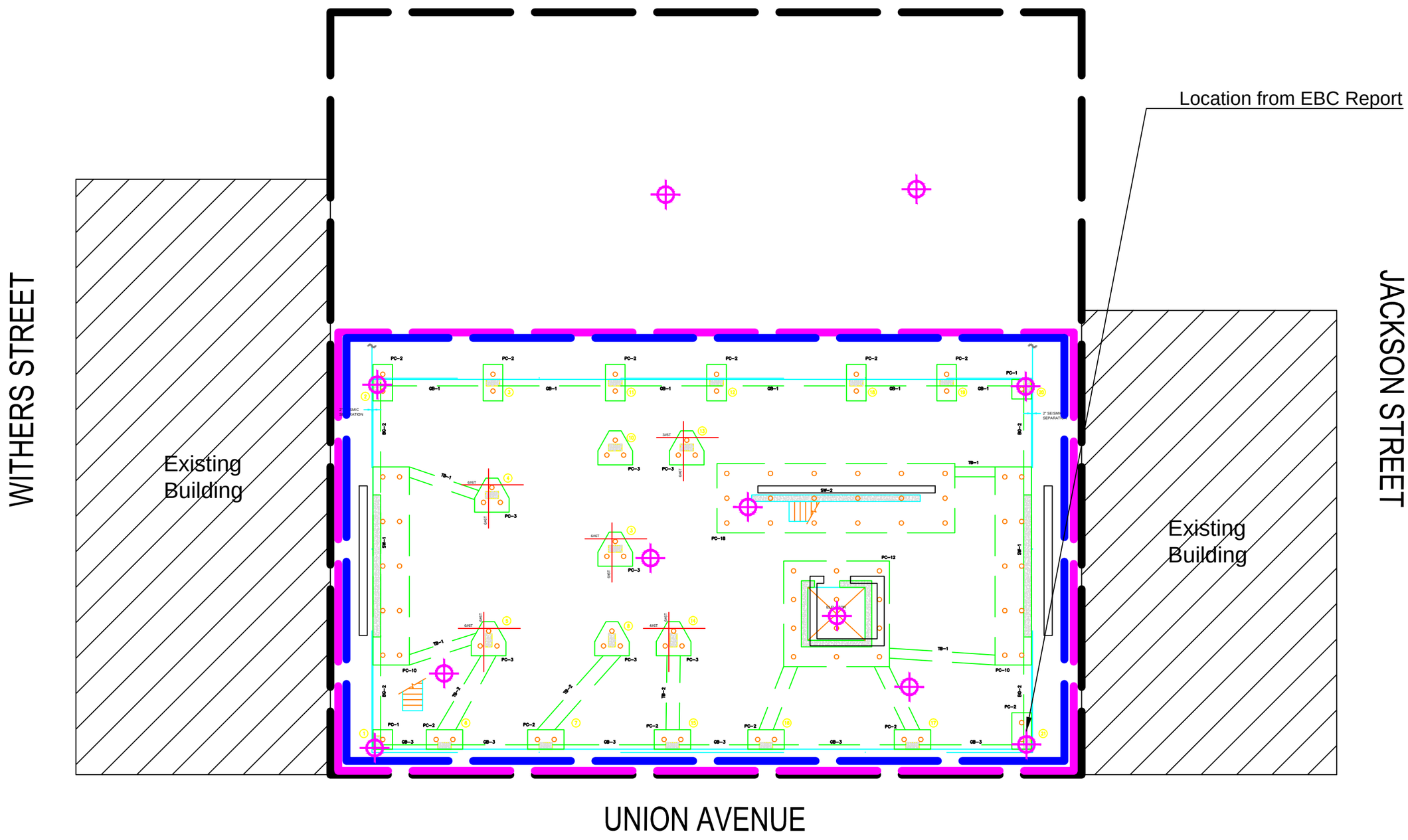

CREATIVE ENVIRONMENT SOLUTIONS (CES)
39 WEST 37TH STREET 14TH FLOOR
NEW YORK, NY 10018

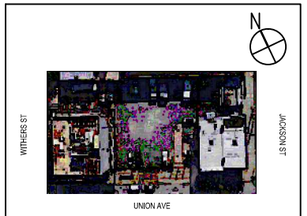

526 Union Ave
Brooklyn, NY 11211

Legend

- Property Line
- Proposed Building Footprint
- Existing Building
- Proposed Endpoint Sampling Location

Comments:

Designer:	A. ARRIGO
Drawn by:	A. ARRIGO
Checked by:	C.PUERTA
Date:	December 14, 2015

Remedial Action Plan
Figure #3; Location of Proposed Endpoint Samples

Tryad Group
250 Greenpoint Avenue; Suite #4
Brooklyn, New York 11222

THE SKETCH IS FOR INFORMATIONAL PURPOSES ONLY
ALL QUANTITIES ARE TO BE FIELD VERIFIED

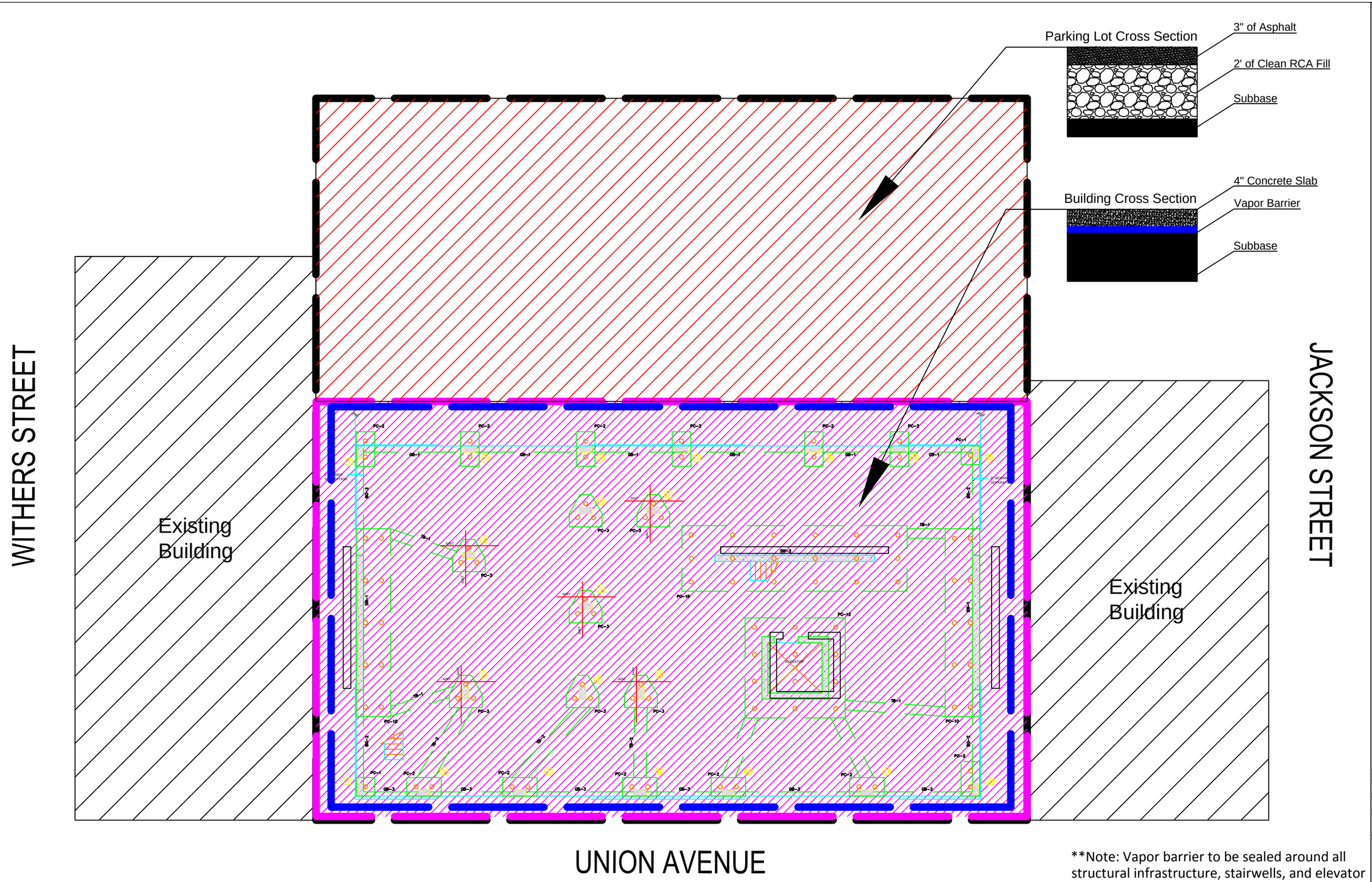

**Note: Vapor barrier to be sealed around all structural infrastructure, stairwells, and elevator pits. Vapor barrier to be installed on exterior sidewalls to final proposed grade.

CREATIVE ENVIRONMENT SOLUTIONS (CES)
39 WEST 37TH STREET 14TH FLOOR
NEW YORK, NY 10018

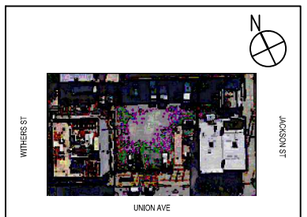

526 Union Ave
Brooklyn, NY 11211

Legend

- Property Line
- Proposed Building Footprint
- Existing Building
- Parking Lot
- Building

Comments:

Designer:	A. ARRIGO
Drawn by:	A. ARRIGO
Checked by:	C.PUERTA
Date:	December 14, 2015

Remedial Action Plan
Figure #4; Composition Cover Locations

Tryad Group
250 Greenpoint Avenue; Suite #4
Brooklyn, New York 11222

THE SKETCH IS FOR INFORMATIONAL PURPOSES ONLY
ALL QUANTITIES ARE TO BE FIELD VERIFIED

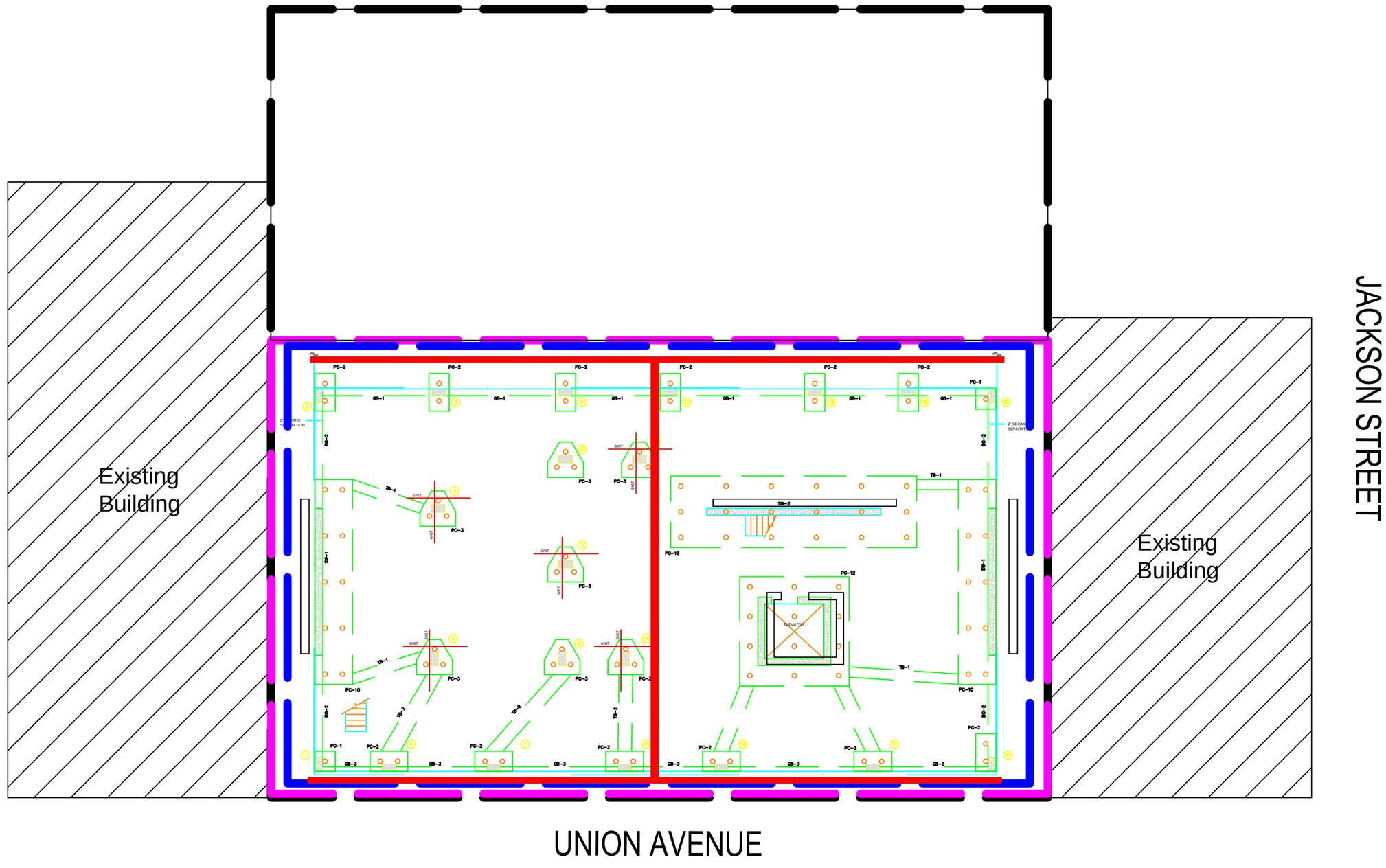

CREATIVE ENVIRONMENT SOLUTIONS (CES)
39 WEST 37TH STREET 14TH FLOOR
NEW YORK, NY 10018

526 Union Ave
Brooklyn, NY 11211

Legend

- Property Line
- Proposed Building Footprint
- Existing Building
- Proposed SSDS Piping Locations

Comments:

Designer:	A. ARRIGO
Drawn by:	A. ARRIGO
Checked by:	C.PUERTA
Date:	December 14, 2015

Remedial Action Plan
Figure #5; Proposed SSDS Piping Locations

Tryad Group
250 Greenpoint Avenue; Suite #4
Brooklyn, New York 11222

THE SKETCH IS FOR INFORMATIONAL PURPOSES ONLY
ALL QUANTITIES ARE TO BE FIELD VERIFIED

APPENDIX 1

PROPOSED DEVELOPMENT PLANS

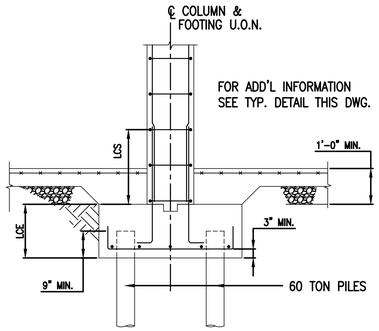

01
SCALE: NTS

TYPICAL PILE CAP DETAIL

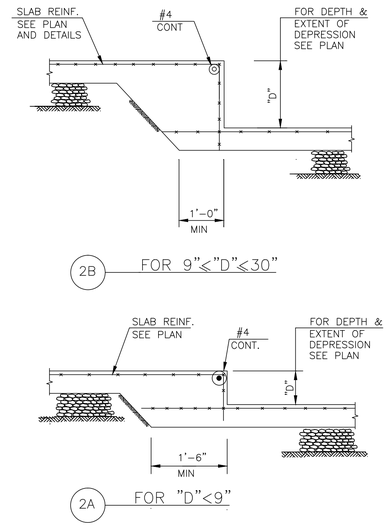

02
SCALE: NTS

TYPICAL DETAILS OF DEPRESSION IN SLAB-ON-GRADE

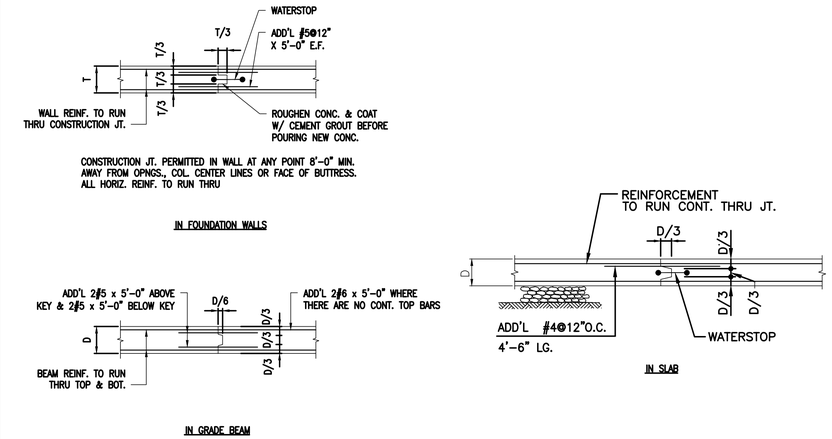

03
SCALE: NTS

TYPICAL CONSTRUCTION JOINT DETAILS

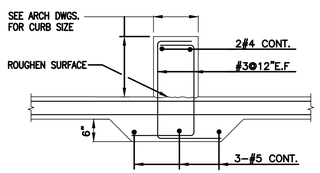

04
SCALE: NTS

TYPICAL DETAIL AT
CURB ON - ON - GRADE

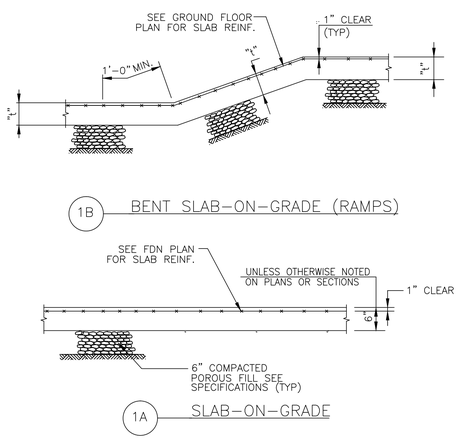

05
SCALE: NTS

TYPICAL SLAB-ON-GRADE

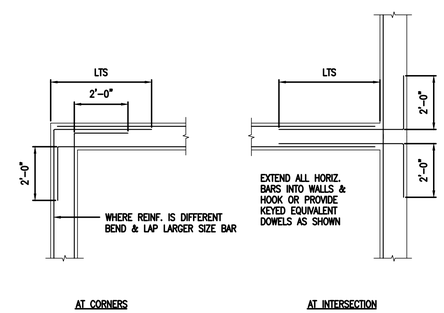

06
SCALE: NTS

HORIZONTAL WALL REINFORCEMENT DETAIL

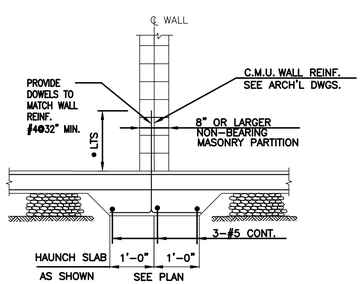

NOTE: USE SIMILAR
DETAIL AT STAIRS

07
SCALE: NTS

MASONRY PARTITION BEARING ON SLAB-ON-GRADE

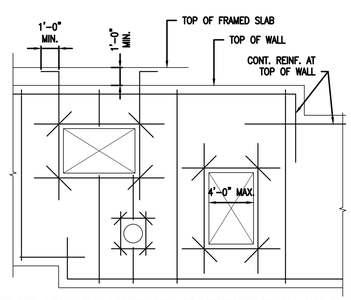

NOTES:
1. ALL INTERRUPTED BARS IN EACH DIRECTION SHALL BE COMPENSATED BY ADD'L BARS EQUAL TO 1/2 THE INTERRUPTED AREA, (OR 2#7 MIN.) AT EACH SIDE OF OPENING.
2. ALL ADD'L CORNER BARS AT OPNGS. ARE 2#3 x 4'-0" (EACH FACE).
3. FOR LENGTH OF SPLICES SEE SCHEDULE OF EMBEDMENT AND SPLICE LENGHTS THIS DWG.
4. WHERE FDN. WALL OPENINGS ARE WIDER THAN 4'-0" CONTRACTOR SHALL SUBMIT LOCATIONS & DIMENSIONS TO ENGINEER FOR REDESIGN.

08
SCALE: NTS

TYPICAL DETAIL OF ADD'L REINFORCEMENT AT CONC. FOUNDATION WALL OPENINGS
AND OF SETPS IN TOP & BOTTOM OF FOUNDATION WALL

STRUCTURAL ENGINEERING TECHNOLOGIES, P.C.

CONSULTING STRUCTURAL AND FOUNDATION ENGINEERS

40-12 28TH STREET
LONG ISLAND CITY, NY 11101
T(718)706-7196 F(718)472-4464

ALL RIGHTS RESERVED
ALL DRAWINGS SPECIFICATIONS AND COPIES THEREOF FURNISHED BY S.E.T., P.C. ARE AND WILL REMAIN THEIR PROPERTY. THEY ARE NOT TO BE USED ON THIS OR ANY OTHER PROJECT UNLESS WRITTEN PERMISSION IS GIVEN.

OWNER:

NOTE:
STRUCTURAL ENGINEERING TECHNOLOGIES, P.C. HAS NOT BEEN RETAINED TO PERFORM CONTROLLED INSPECTIONS OF ANY KIND FOR THIS PROJECT.

NO.	DATE:	DESCRIPTION

REVISONS:

FILINGS:

PROJECT

526 UNION AVENUE
BROOKLYN, N.Y. 11211

FACADE RENOVATION AND BROWNSTONE REPAIR

DRAWING TITLE:

TYPICAL FOUNDATION DETAILS

SEAL & SIGNATURE

DATE:	09-23-14
PROJECT NO:	
SCALE:	AS NOTED
DRAWING BY:	M.M.
CHECKED BY:	G.J.C.
DWG NO:	**FO-201.00**
SHEET NO:	OF

BSCAN STICKER

DOB APPROVAL STAMP

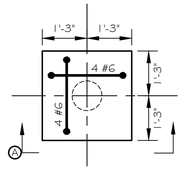

PILE CAP- PC1
SCALE: 1/2" = 1'-0"

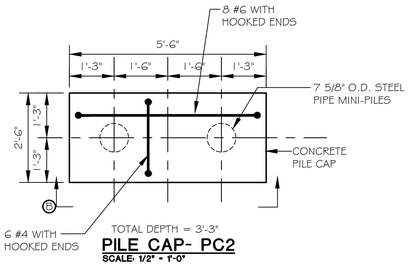

PILE CAP- PC2
SCALE: 1/2" = 1'-0"

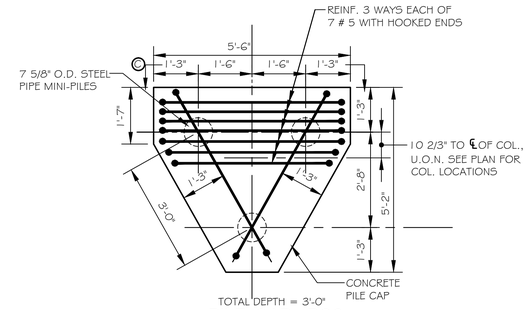

PILE CAP- PC3
SCALE: 1/2" = 1'-0"

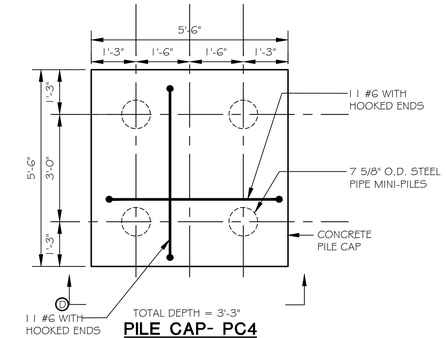

PILE CAP- PC4
SCALE: 1/2" = 1'-0"

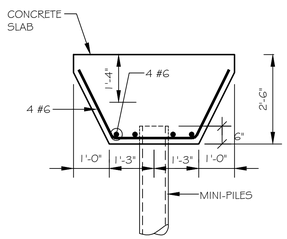

SECTION Ⓐ
SCALE: 1/2" = 1'-0"

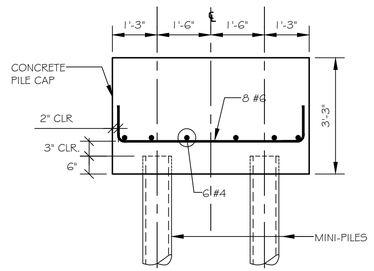

SECTION Ⓑ
SCALE: 1/2" = 1'-0"

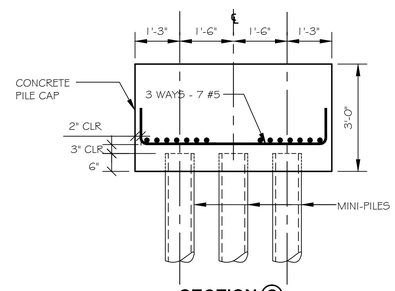

SECTION Ⓒ
SCALE: 1/2" = 1'-0"

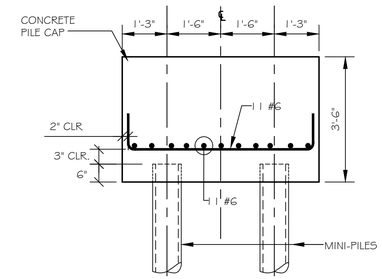

SECTION Ⓓ
SCALE: 1/2" = 1'-0"

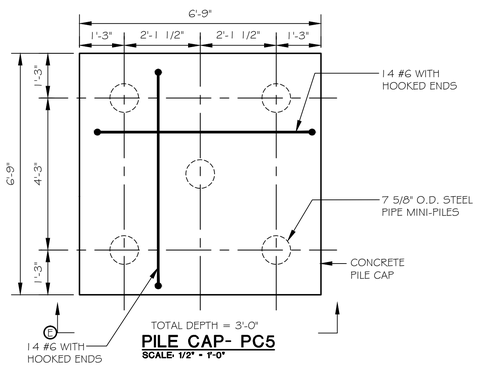

PILE CAP- PC5
SCALE: 1/2" = 1'-0"

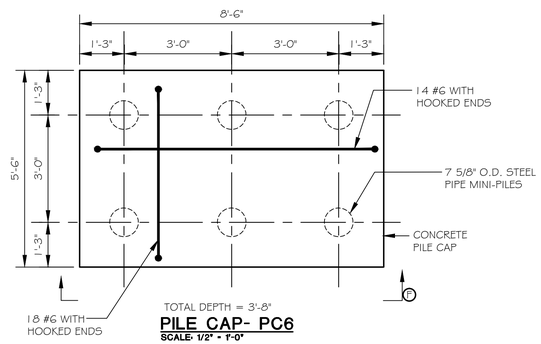

PILE CAP- PC6
SCALE: 1/2" = 1'-0"

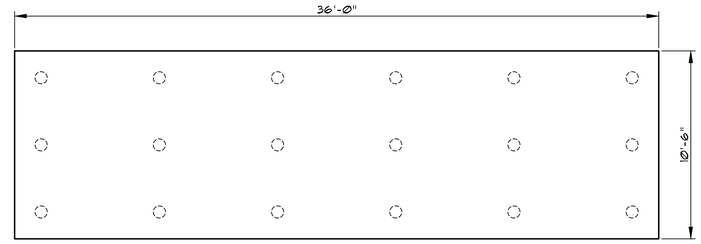

PILE CAP- PC18
SCALE: 1/4" = 1'-0"

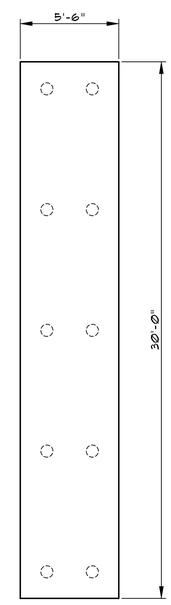

PILE CAP- PC10
SCALE: 1/4" = 1'-0"

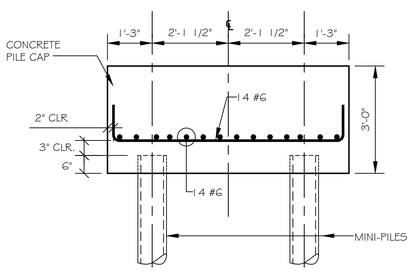

SECTION Ⓔ
SCALE: 1/2" = 1'-0"

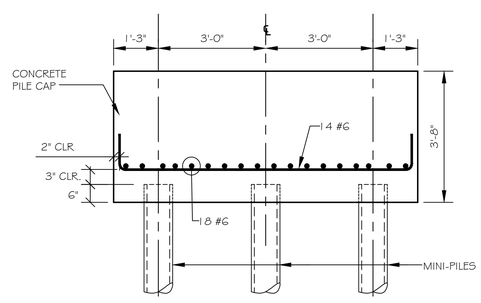

SECTION Ⓕ
SCALE: 1/2" = 1'-0"

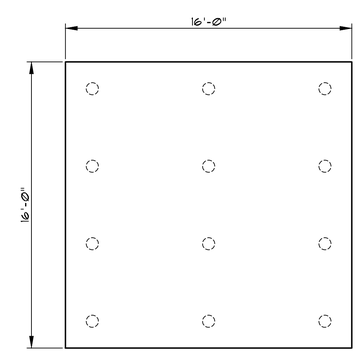

PILE CAP- PC12
SCALE: 1/4" = 1'-0"

STRUCTURAL ENGINEERING TECHNOLOGIES, P.C.

CONSULTING STRUCTURAL AND FOUNDATION ENGINEERS

40-12 28TH STREET
LONG ISLAND CITY, NY 11101
T(718)706-7196 F(718)472-4464

ALL RIGHTS RESERVED
ALL DRAWINGS SPECIFICATIONS AND COPIES THEREOF FURNISHED BY S.E.T., P.C. ARE AND WILL REMAIN THEIR PROPERTY. THEY ARE NOT TO BE USED ON THIS OR ANY OTHER PROJECT UNLESS WRITTEN PERMISSION IS GIVEN.

OWNER:

NOTE:
STRUCTURAL ENGINEERING TECHNOLOGIES, P.C. HAS NOT BEEN RETAINED TO PERFORM CONTROLLED INSPECTIONS OF ANY KIND FOR THIS PROJECT.

NO.	DATE:	DESCRIPTION

REVISONS:

FILINGS:

PROJECT

526 UNION AVENUE
BROOKLYN, N.Y. 11211

FACADE RENOVATION AND BROWNSTONE REPAIR

DRAWING TITLE:

PILE CAP DETAILS

SEAL & SIGNATURE

DATE:	09-23-14
PROJECT NO:	
SCALE:	AS NOTED
DRAWING BY:	M.M.
CHECKED BY:	G.J.C.
DWG NO:	**FO-202.00**
SHEET NO:	OF

BSCAN STICKER

DOB APPROVAL STAMP

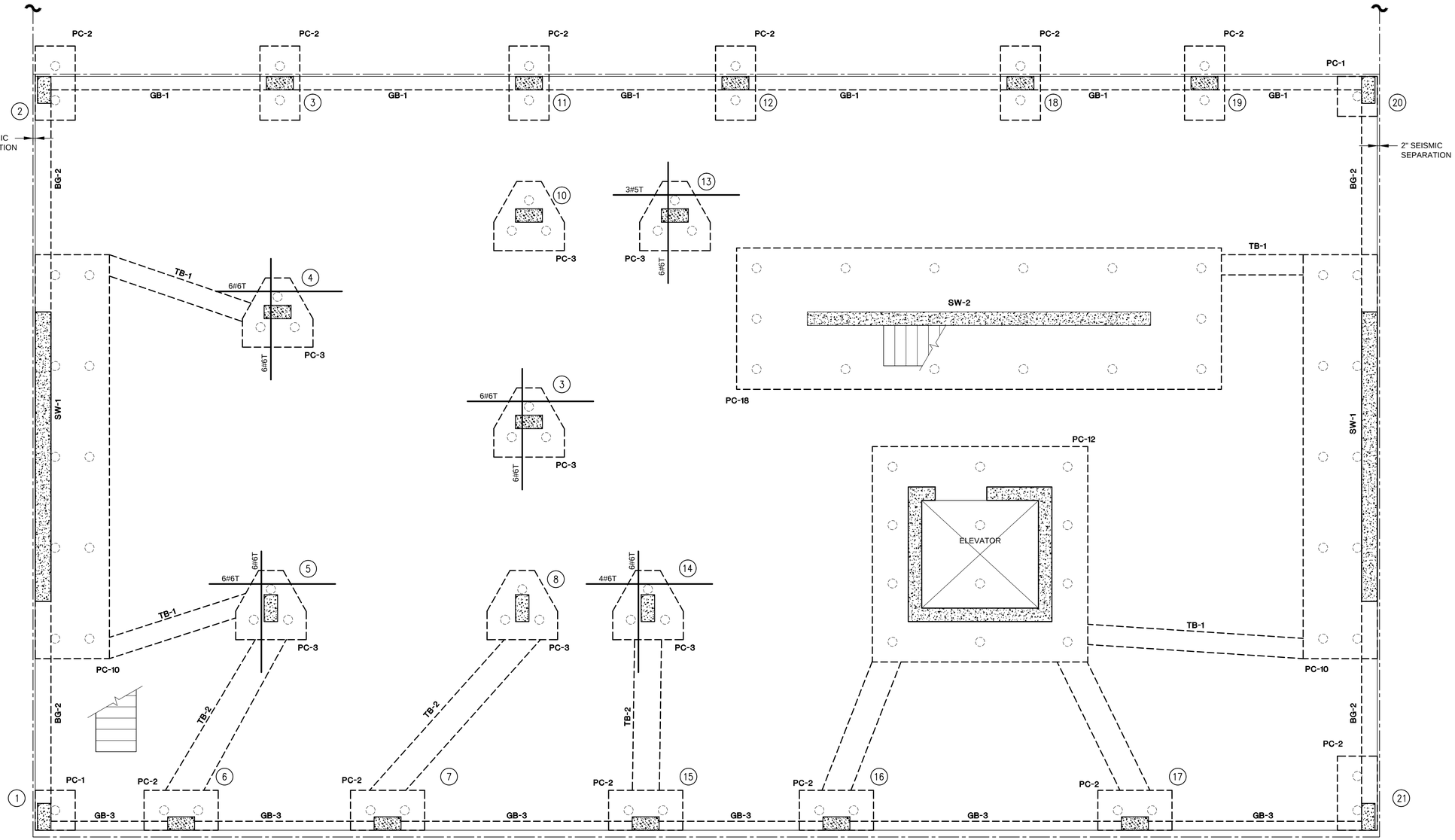

FOUNDATION PLAN

SCALE: 1/4" = 1'-0"

NOTES:

1. SLAB ON GRADE SHALL BE @ ELEV. 0'-0" UNLESS OTHERWISE NOTED.
2. SLAB ON GRADE SHALL BE 8" THICK AND SHALL BE REINF. WITH #4@12" T&B. ADD 3#5T E.W. AT PILE CAPS EXCEPT WHEN OTHERWISE SHOWN ON PLAN.
3. FOR TYPICAL FOUNDATION DETAILS AND FOUNDATIONS AND DETAILS SEE SERIES 200 DRAWINGS.
4. FOR SHEAR WALLS SEE SERIES 300 DRAWINGS.
5. FOR TYPICAL SUPERSTRUCTURE DETAILS SEE SERIES 400 DRAWINGS.
6. TOP OF PILE CAPS SHALL BE AT 1'-0" BELOW TOP OF SLAB EXCEPT AT LOCATIONS WHERE GRADE BEAMS FRAME INTO COLUMNS WHERE TOP OF PILE CAP SHALL BE AT -3'-0" FROM TOP OF SLAB AND AS OTHERWISE NOTED ON PLAN THUS (-....) FROM TOP OF SLAB.

GRADE BEAM AND TIE BEAM SCHEDULE

MARK	SIZES		REINFORCEMENT				REMARKS
	WIDTH	DEPTH	BOTTOM CONT.	TOP CONT.	STIRRUPS SIZE	STIRRUPS SPACING	
TB-1							
TB-2							
GB-1							
GB-2							
GB-3							

STRUCTURAL ENGINEERING TECHNOLOGIES, P.C.

CONSULTING STRUCTURAL AND FOUNDATION ENGINEERS

40-12 28TH STREET
LONG ISLAND CITY, NY 11101
T(718)706-7196 F(718)472-4464

ALL RIGHTS RESERVED

ALL DRAWINGS SPECIFICATIONS AND COPIES THEREOF FURNISHED BY S.E.T., P.C. ARE AND WILL REMAIN THEIR PROPERTY. THEY ARE NOT TO BE USED ON THIS OR ANY OTHER PROJECT UNLESS WRITTEN PERMISSION IS GIVEN.

OWNER:

NOTE:
STRUCTURAL ENGINEERING TECHNOLOGIES, P.C. HAS NOT BEEN RETAINED TO PERFORM CONTROLLED INSPECTIONS OF ANY KIND FOR THIS PROJECT.

NO.	DATE:	DESCRIPTION

REVISONS:

FILINGS:

PROJECT

526 UNION AVENUE
BROOKLYN, N.Y. 11211

FACADE RENOVATION AND BROWNSTONE REPAIR

DRAWING TITLE:

CELLAR/FOUNDATION FRAMING PLAN

SEAL & SIGNATURE

DATE: 09-23-14
PROJECT NO:
SCALE: AS NOTED
DRAWING BY: M.M.
CHECKED BY: G.J.C.
DWG NO: FO-100.00
SHEET NO: OF

BSCAN STICKER

DOB APPROVAL STAMP

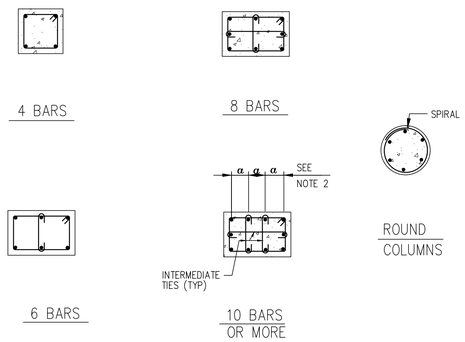

COLUMN TIE SCHEDULE		
SIZE OF VERT. REINF.	SIZE OF TIES	SPACING OF TIES
#5 & #6	#3	10" OR MIN. COLUMN DIMENSTIONS, WHICHEVER IS SMALLER
#5 TO #10	#3	12" OR MIN. COLUMN DIMENSTIONS, WHICHEVER IS SMALLER
#11 & UP	#4	22" OR MIN. COLUMN DIMENSTIONS, WHICHEVER IS SMALLER

NOTES:
UNLESS OTHERWISE INDICATED IN COLUMN SCHEDULE.

1. TOTAL NUMBER OF BARS SHOULD BE SPACED AROUND PERIMETER IN SUCH A WAY AS TO ACHIEVE APPROXIMATELY EQUAL SPACING.
2. FOR a < 6" ALTERNATE INTERMEDIATE TIES MAY BE OMITTED.
3. THE ABOVE DETAILS APPLY ALSO AT BUTTRESSES.
4. MIN. VERTICAL BAR SPACING (O.C.) SHALL BE 2 X BAR DIA.
5. FOR COLUMN TIE SPACING SEE TABLE ON DWG. ...
6. CONCRETE COVER FOR MAIN COLUMN REINF. SHALL BE 2" MIN.

01
SCALE: NTS
PLACEMENT OF REINFORCEMENT IN CONCRETE COLUMNS

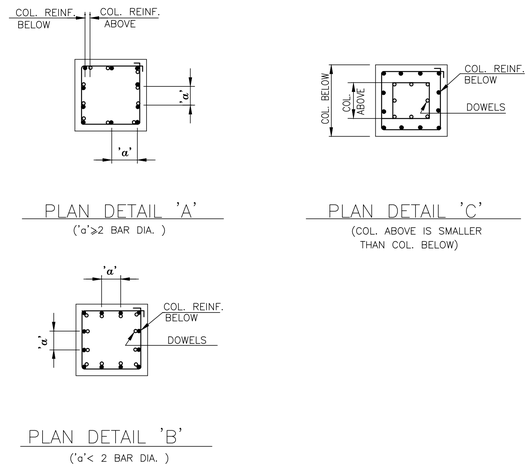

NOTES:

1. PROVIDE LAP SPLICE •LTS AS PER SCHEDULE OF EMBEDMENT & SPLICE LENGTHS ON DWG ...
2. ANY COMBINATION OF DETAILS 'A','B' & 'C' MAY BE USED IN THE SAME COLUMN IF REQUIRED.
3. CROSS TIES ARE NOT SHOWN IN ABOVE PLAN DETAILS. FOR CROSS TIES REQUIREMENTS REFER TO ADDITIONAL COL. DETAILS.

02
SCALE: NTS
CONCRETE COLUMN REINFORCEMENT LAP SPLICES

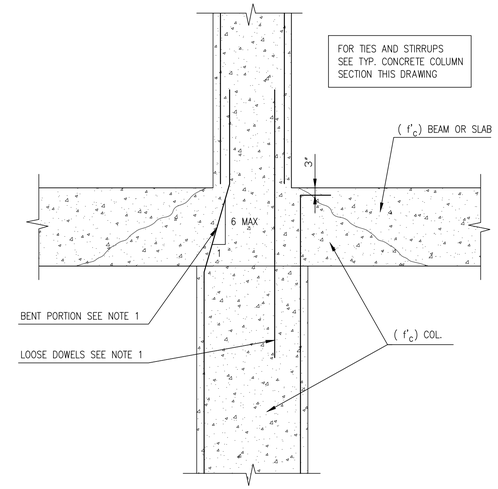

NOTE 1:

A) BENT PORTION OF COLUMN REINFORCING SHALL BE WITHIN FLOOR CONSTRUCTION.
B) IF A SLOPE OF 1:6 CANNOT BE ACCOMPLISHED PROVIDE LOOSE DOWELS – EXTEND BARS OR DOWELS SHALL EQUAL AREA OF VERTICAL COLUMN REINFORCEMENT ABOVE.
C) REINFORCEMENT NOT EXTENDED OR SPLICED SHALL BE TERMINATED WITH 1'-0" HOOK.
D) WHEN COLUMN ABOVE IS LARGER THAN COLUMN BELOW EXTEND REINFORCEMENT FROM COLUMN BELOW INTO COLUMN ABOVE AND SPLICE IN ACCORDANCE WITH TYP. CONCRETE COLUMN SECTION ON THIS DRAWING.

03
SCALE: NTS
CONCRETE COLUMN AT CHANGE IN SIZE

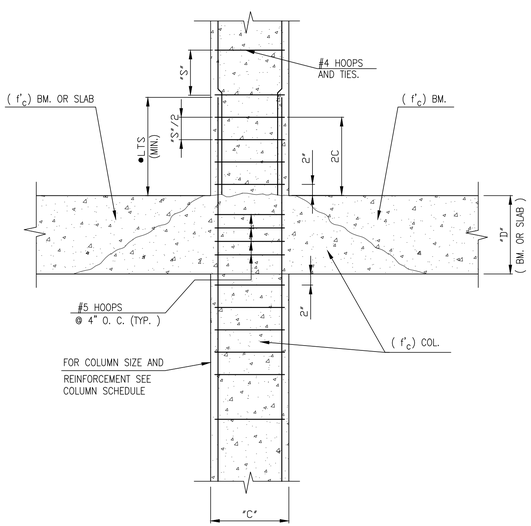

05
SCALE: NTS
TYPICAL CONCRETE COLUMN SECTION

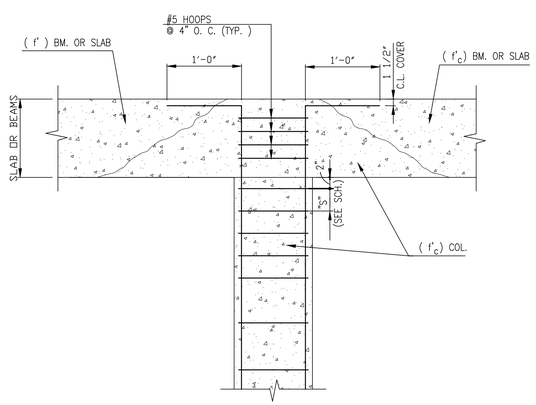

06
SCALE: NTS
TYPICAL CONCRETE COLUMN @ TOP END

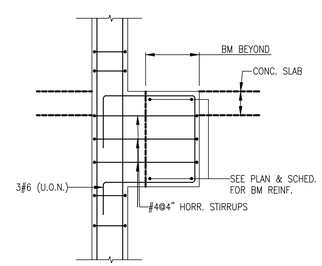

07
SCALE: NTS
TYPICAL DETAIL AT ECCENTRIC BEAM BEAM TO COLUMN CONNECTION

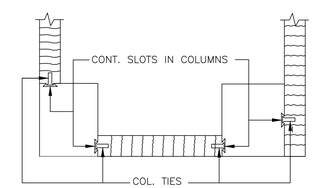

NOTE:

COLUMN TIES SHALL BE 11 GAGE
NONE-CORRODING TIES EVERY 6 th BLOCK COURSE.

03
SCALE: NTS
ANCHORING MASONRY IN CONCRETE

STRUCTURAL ENGINEERING TECHNOLOGIES, P.C.

CONSULTING STRUCTURAL AND FOUNDATION ENGINEERS

40-12 28TH STREET
LONG ISLAND CITY, NY 11101
T(718)706-7196 F(718)472-4464

ALL RIGHTS RESERVED
ALL DRAWINGS SPECIFICATIONS AND COPIES THEREOF FURNISHED BY S.E.T., P.C. ARE AND WILL REMAIN THEIR PROPERTY. THEY ARE NOT TO BE USED ON THIS OR ANY OTHER PROJECT UNLESS WRITTEN PERMISSION IS GIVEN.

OWNER:

NOTE:
STRUCTURAL ENGINEERING TECHNOLOGIES, P.C. HAS NOT BEEN RETAINED TO PERFORM CONTROLLED INSPECTIONS OF ANY KIND FOR THIS PROJECT.

NO.	DATE:	DESCRIPTION

REVISONS:

FILINGS:

PROJECT

526 UNION AVENUE
BROOKLYN, N.Y. 11211

FACADE RENOVATION AND BROWNSTONE REPAIR

DRAWING TITLE:

TYPICAL COLUMN DETAILS

SEAL & SIGNATURE

DATE:	09-23-14
PROJECT NO:	
SCALE:	AS NOTED
DRAWING BY:	M.M.
CHECKED BY:	G.J.C.
DWG NO:	S-302.00
SHEET NO:	OF

BSCAN STICKER

DOB APPROVAL STAMP

GENERAL NOTES:

1. WORK OF THIS CONTRACT SHALL COMPLY WITH ALL THE REQUIREMENTS OF THE BUILDING CODE OF THE CITY OF NEW YORK.

2. THE WORK OF THIS CONTRACT SHALL INCLUDE ALL EARTHWORK, FOUNDATION AND DEWATERING, CONCRETE, AND ROOF DECK, AS REQUIRED TO DO A FULL AND COMPLETE WORK.

3. THE SOILS ENGINEERING CONSULTANT LICENSED IN THE STATE OF NEW YORK RETAINED BY THE GENERAL CONTRACTOR SHALL BE RESPONSIBLE FOR INSPECTION AND APPROVAL OF TEMPORARY SHEETING & BRACING, IF REQUIRED.

4. CONTRACTOR SHALL COORDINATE HIS WORK WITH ALL OTHER TRADES AND INSTALL ANY REQUIRED OPENINGS, ANCHORS, INSERTS, CONDUITS FOR COMPLETION OF THEIR WORK UNDER THIS CONTRACT. HE SHALL COORDINATE HIS WORK WITH EQUIPMENT MANUFACTURERS AS WELL AS THE CONSTRUCTION MANAGER FOR OWNER-FURNISHED ITEMS.

5. FLOOR DEPRESSIONS AND OPENINGS:

   a) FLOOR DEPRESSIONS AND OPENINGS TO BE PROVIDED WHERE EQUIPMENT OR FLOOR FINISHES REQUIRE THEM, WHETHER OR NOT INDICATED ON STRUCTURAL DRAWINGS. IT SHALL BE THE RESPONSIBILITY OF THE CONTRACTOR TO COORDINATE HIS WORK WITH ARCHITECTURAL AND MECHANICAL DRAWINGS AND SPECIFICATIONS AND PROVIDE DEPRESSIONS, TRENCH HEADERS AND OPENINGS AS REQUIRED.

   b) CONTRACTOR SHALL PROVIDE A COMPOSITE PENETRATION DRAWING FOR EACH FLOOR SHOWING PRECISE LOCATION AND SIZE OF ALL SLEEVES, BOXED OPENINGS AND DEPRESSIONS FOR ALL TRADES. APPROVED COPIES OF THESE DRAWINGS SHALL BE USED BY DETAILER TO PROVIDE NECESSARY ADDITIONAL REINFORCEMENT AT ALL SUCH LOCATIONS IN ACCORDANCE WITH CONTRACT DRAWINGS AND SPECIFICATIONS. BOXED OPENINGS WILL NOT BE ALLOWED UNLESS SPECIFICALLY SHOWN ON DWGS.

6. THE CONTRACTOR SHALL BE COMPLETELY RESPONSIBLE FOR THE SAFETY AND INTEGRITY OF EXISTING STRUCTURE. THE CONTRACTOR SHALL UTILIZED SUCH MEANS AS NECESSARY TO PROVIDE TEMPORARY SUPPORTS FOR EXISTING STRUCTURE UNTIL SUCH TIME THAT ALL PERMANENT MEMBERS AND CONNECTIONS ARE SECURED IN PLACE.

7. ALL CONTRACTORS ARE REQUESTED TO EXAMINE THE DRAWINGS AND SPECIFICATIONS CAREFULLY, VISIT THE SITE, FULLY INFORM THEMSELVES AS TO ALL EXISTING CONDITIONS AND LIMITATIONS, PRIOR TO SUBMITTING THE PROPOSAL. FAILURE TO VISIT THE SITE AND NOT FAMILIARIZING WITH THE EXISTING CONDITIONS AND LIMITATIONS WILL IN NO WAY RELIEVE SUCCESSFUL BIDDER FROM FURNISHING ANY MATERIALS OR PERFORMING ANY WORK THAT MAY BE REQUIRED TO COMPLETE WORK IN ACCORDANCE WITH DRAWINGS AND SPECIFICATIONS WITHOUT ADDITIONAL COST TO OWNER.

   a) THE CONTRACTOR SHALL SUBMIT A DETAILED PHASING AND DEMOLITION WORKING PLANS FOR A/E REVIEW PRIOR TO THE INCEPTION OF ANY DEMOLITION WORK.

8. CONTRACTOR SHALL VERIFY ALL FIELD DIMENSIONS RELATED TO THE NEW WORK AND SHALL REPORT DISCREPANCIES, IF ANY, TO THE ENGINEER, PRIOR TO THE FABRICATION OF ANY MATERIALS.

FOUNDATION NOTES:

1. DRILLED PILES HAVING A MINIMUM CAPACITY OF TONS EACH SHALL BE USED WHEN PILE CAPS ARE DESIGNATED PCS.

2. THE SITE SHALL BE PROTECTED AGAINST CAVING AND MOVEMENT OF SOIL AT ALL TIMES.

3. THE CONTRACTOR WILL BE REQUIRED TO SAFELY SUPPORT AND MAINTAIN ADJACENT AND ABUTTING PROPERTY AND STRUCTURES. THE CONTRACTOR WILL BE REQUIRED TO MAINTAIN THE WORK SITE SAFE TO LIFE, LIMB AND PROPERTY.

4. CONTRACTOR SHALL FAMILIARIZE HIMSELF WITH THE SUBSURFACE CONDITIONS BEFORE COMMENCING ANY EXCAVATION.

5. BEFORE ANY FOUNDATIONS ARE CONSTRUCTED, CONTRACTOR SHALL ESTABLISH BY SURVEY THE EXACT LOCATION OF ALL UNDERGROUND UTILITIES AND TRENCHES AND PIPING TO REMAIN IN THE FINISHED WORK. THESE LOCATIONS SHALL BE SUBMITTED ON DRAWINGS TO THE ARCHITECT FOR REVIEW. THE CONTRACTOR SHALL BE RESPONSIBLE FOR THE SAFETY OF ALL EXISTING CONSTRUCTION AND SHALL REPAIR ANY DAMAGE TO THE SATISFACTION OF THE OWNER AT NO EXTRA COST TO THE OWNER.

6. NO BACK FILLING SHALL BE DONE AGAINST FOUNDATION AND RETAINING WALLS UNTIL CONCRETE HAS ATTAINED AT LEAST 75% OF ITS 28 DAY STRENGTH. BEFORE BACKFILLING, PROVIDE BRACING FOR WALLS SUSTAINING MORE THAN 3 FEET OF EARTH PRESSURE. THIS BRACING SHALL REMAIN IN PLACE UNTIL ALL SLABS (INCLUDING SLAB ON GRADE) AND BEAMS FRAMING INTO WALL HAVE BEEN PLACED AND SET.

7. IN NO CASE SHALL BULLDOZERS OR OTHER HEAVY EQUIPMENT BE PERMITTED CLOSER THAN 8 FEET FROM ANY FOUNDATION WALL. IF IT IS NECESSARY TO OPERATE SUCH EQUIPMENT CLOSER THAN 8 FEET TO THE WALL, THE CONTRACTOR SHALL BE THE SOLE RESPONSIBLE PARTY AND AT HIS OWN EXPENSE SHALL PROVIDE ADEQUATE SUPPORTS OR BRACE THE WALL TO WITHSTAND THE ADDITIONAL LOADS SUPERIMPOSED FROM SUCH EQUIPMENT.

8. VERTICAL CONSTRUCTION JOINTS IN WALLS AND GRADE BEAMS SHALL BE LOCATED AT LEAST 8 FEET FROM ANY BUTTRESS. COLUMN LINES OR WALL OPENINGS FOR FOUNDATION WALLS, AND AT CENTER LINE BETWEEN SUPPORTS FOR GRADE BEAMS. SEE TYPICAL CONSTRUCTION JOINT DETAILS.

9. NO HORIZONTAL CONSTRUCTION JOINT WILL BE PERMITTED IN WALLS AND GRADE BEAMS UNLESS SPECIFICALLY SHOWN ON PLANS OR SECTIONS. SEE TYPICAL CONSTRUCTION JOINT DETAILS.

CONCRETE NOTES:

1. CONCRETE DESIGN DETAIL AND CONSTRUCTION TO CONFORM TO THE LATEST PROVISIONS OF THE AMERICAN CONCRETE INSTITUTE BUILDING CODE REQUIREMENTS FOR REINFORCED CONCRETE, ACI 318-95, "SPECIFICATIONS FOR STRUCTURAL CONCRETE FOR BUILDINGS", ACI (LATEST EDITION), THE SPECIFICATIONS, AND THE BUILDING CODE OF THE CITY OF NEW YORK.

2. ALL CONCRETE SHALL BE CONTROLLED NORMAL WEIGHT CONCRETE HAVING A MINIMUM COMPRESSIVE STRENGTH AT 28 DAYS AS LISTED BELOW. MINIMUM CEMENT CONTENT SHALL BE AS STATED IN THE SPECIFICATIONS AND NOTED BELOW.

SHEAR WALL FOOTINGS AND PILE CAPS	f'_c = 4,000 PSI, STONE
OTHER FOOTINGS AND PILE CAPS	f'_c = 4,000 PSI, STONE
SLAB-ON-GRADE	f'_c = 3,000 PSI, STONE
ELEVATED SLABS	= 4000 PSI
COLUMNS	= 4000 PSI
SHEAR WALLS	= 4000 PSI
ALL OTHER	= 4000 PSI

NO CONCRETE SHALL BE PLACED UNTIL THE DESIGN MIXES HAVE BEEN APPROVED.

3. CONCRETE EXPOSED TO WEATHER IN SERVICE SHALL HAVE A MAXIMUM W/C RATION OF 0.40.

4. REINFORCEMENT TO CONSIST OF INTERMEDIATE GRADE DEFORMED BARS CONFORMING TO SPECIFICATIONS OF ASTM A615 GRADE 60. WELDED WIRE FABRIC SHALL CONFORM TO ASTM SPECIFICATION A 185, LATEST EDITION AND ACI SP-66, LATEST EDITION. REINFORCEMENT OF CONCRETE EXPOSED TO MOISTURE SHALL BE EPOXY-COATED.

5. THE CONCRETE CONTRACTOR SHALL COOPERATE WITH ALL OTHER TRADES IN PERMITTING THE FORMING AND SETTING OF SLOTS, RECESSES, CHASES, SLEEVES, INSERTS, BOLTS, HANGERS, OPENINGS AND EQUIPMENT. THE CONTRACTOR SHALL CUT OR FORM POCKETS IN WALLS TO RECEIVE BEAMS OR COLUMNS WHERE REQUIRED.

6. WHERE STIRRUPS OR TIES EXTEND BEYOND THE MAIN TOP REINFORCEMENT ADD 2-#5 REBARS CONT. IN ALL CONCRETE BEAMS AND GIRDERS FOR THE LENGTH OF THE STIRRUP OR TIE SPACING.

7. ALL REINFORCEMENT SHALL BE SECURELY HELD IN PLACE WHILE PLACING CONCRETE. IF REQUIRED, ADDITIONAL BARS OR STIRRUPS SHALL BE PROVIDED BY THE CONTRACTOR TO FURNISH SUPPORT FOR ALL BARS.

8. ALL CONTINUOUS REINFORCING BARS SHALL BE LAPPED AS PER EMBEDMENT AND SPLICE LENGTH SCHEDULE ON DRAWING S403. LAP CONTINUOUS TOP REINFORCEMENT AT CENTER OF SPAN AS REQUIRED. LAP CONTINUOUS BOTTOM BARS AT SUPPORTS AS REQUIRED. TERMINATE CONTINUOUS BARS AT NON-CONTINUOUS END WITH STANDARD HOOK.

9. MINIMUM CONCRETE COVER FOR REINFORCING STEEL SHALL BE THREE-FOURTH (3/4") INCHES FOR SLABS, ONE AND ONE-HALF (1-1/2") INCHES FOR BEAMS AND ONE (1") INCH FOR WALLS. ALL CONCRETE EXPOSED TO WEATHER OR EARTH FILL SHALL HAVE MINIMUM CONCRETE COVER OF TWO (2") INCHES FOR BARS LARGER THAN #5, ONE AND ONE-HALF (1-1/2") INCHES FOR #5 BARS OR SMALLER, AND THREE (3") INCHES FOR ALL CONCRETE PLACED AGAINST EARTH. ALL CONCRETE PLACED AGAINST PERMANENT SHEETING SHALL HAVE MINIMUM CONCRETE COVER OF FOUR (4") INCHES.

10 ALL CONCRETE EXPOSED TO WEATHER SHALL BE AIR ENTRAINED.

11. VERTICAL CONSTRUCTION JOINTS USING APPROVED BULKHEADS MAY BE MADE AT CENTER OF BEAM AND SLAB SPANS WHERE STOP IN CONCRETE WORK IS NECESSARY. LOCATION OF VERTICAL CONSTRUCTION JOINTS IN EXPOSED STRUCTURAL ELEMENTS, SHALL BE COORDINATED WITH ARCHITECTURAL DRAWINGS. VERTICAL WALL CONSTRUCTION JOINTS SHALL BE LOCATED SO AS TO PROVIDE A 60'-0" MAXIMUM LENGTH OF CONCRETE PLACEMENT. SUCH JOINTS SHALL BE LOCATED AT CENTERLINES OF WALL SPANS BETWEEN SUPPORTS.

    SEE TYPICAL CONSTRUCTION JOINT DETAILS FOR ADDITIONAL INFORMATION.

12. CONTRACTOR SHALL SUBMIT DRAWINGS SHOWING INTENDED POURING SEQUENCE AND LOCATION OF CONSTRUCTION JOINTS TO THE ENGINEER FOR APPROVAL.

13. NO HORIZONTAL CONSTRUCTION JOINT WILL BE PERMITTED IN WALLS, BEAMS AND SLAB UNLESS SPECIFICALLY SHOWN ON PLANS OR SECTIONS.

14. ALL BEAMS AND SLABS TO BE POURED MONOLITHICALLY UNLESS OTHERWISE NOTED.

15. PIPES OR CONDUITS PLACED IN SLABS SHALL NOT HAVE AN O.D. LARGER THAN 1/3 THE SLAB THICKNESS AND SHALL NOT BE SPACED CLOSER THAN 3 DIAMETER ON CENTERS. ALUMINUM CONDUITS SHALL NOT BE PLACED IN CONCRETE. NO CONDUITS SHALL BE PLACED IN SLAB WITHIN 12" OF COLUMN FACE.

16. FOR LOCATION OF FLOOR DRAINS, CURBS, CONCRETE PADS AND FLOOR DEPRESSIONS SEE ARCHITECTURAL AND MECHANICAL DRAWINGS.

17. FOR LOCATION AND DETAILS OF REGLETS AND DRIPS SEE ARCHITECTURAL DRAWINGS.

18. CHAMFER ALL EXPOSED CONCRETE CORNERS. SEE ARCHITECTURAL DRAWINGS FOR DETAILS.

19. PROVIDE MINIMUM 6 X 6 - W 1.4 X W 1.4 WELDED WIRE FABRIC IN CONCRETE FILL. PLACE MESH 1" CLEAR FROM TOP OF FILL. SEE ARCHITECTURAL DRAWINGS FOR DETAILS.

20. WHEN REQUIRED BY OTHER TRADES PROVIDE PADS FOR MECHANICAL EQUIPMENT. PAD SHALL BE 4" MINIMUM IN THICKNESS AND SHALL BE REINFORCED WITH A 6X6-W1.4XW1.4 WWF 1" FROM TOP OF PAD.

SEISMIC NOTES:

1. THE STRUCTURE WAS DESIGNED TO SUSTAIN SEISMIC LOADS IN ACCORDANCE WITH THE REQUIREMENTS OF THE BUILDING CODE OF THE CITY OF NEW YORK.

2. THE BULDING STRUCTURAL OCCUPANCY CATEGORY IS II.

3. SITE CLASS D WILL BE USED IN DETERMINING STRUCTURAL LOADS ON THE BUILDING.

4. SEISMIC LOADS ARE RESISTED BY CONCRETE SHEAR WALLS IN BOTH DIRECTIONS.

5. A MINIMUM SEISMIC SEPARATION OF 2" SHALL BE PROVIDED BETWEEN THIS STRUCTURE AND THE PROPERTY LINE.

SPECIAL INSPECTION NOTES:

1. ALL SPECIAL INSPECTIONS SHALL BE PERFORMED IN STRICT ADHERENCE TO THE REQUIREMENTS OF THE BUILDING CODE OF THE CITY OF NEW YORK.

2. ALL CONCRETE WORK SHALL BE SUBJECT TO SPECIAL INSPECTION.

3. ALL SUBGRADE PREPARATION SHALL BE SUBJECT TO SPECIAL INSPECTION.

4. ALL PILE DRIVING SHALL BE SUBJECT TO SPECIAL INSPECTION.

5. THE PROFESSIONAL ENGINEER RESPONSIBLE FOR SPECIAL INSPECTIONS SHALL SUBMIT TO THE OWNER'S REPRESENTATIVE COPIES OF ALL INSPECTION AND TEST REPORTS AND SHALL IMMEDIATELY REPORT UNSAFE CONDITIONS AS WELL AS DEVIATIONS FROM THE CONTRACT DOCUMENTS.

STRUCTURAL ENGINEERING TECHNOLOGIES, P.C.

CONSULTING STRUCTURAL AND FOUNDATION ENGINEERS

40-12 28TH STREET
LONG ISLAND CITY, NY 11101
T(718)706-7196 F(718)472-4464

ALL RIGHTS RESERVED
ALL DRAWINGS SPECIFICATIONS AND COPIES THEREOF FURNISHED BY S.E.T., P.C. ARE AND WILL REMAIN THEIR PROPERTY. THEY ARE NOT TO BE USED ON THIS OR ANY OTHER PROJECT UNLESS WRITTEN PERMISSION IS GIVEN.

OWNER:

NOTE:
STRUCTURAL ENGINEERING TECHNOLOGIES, P.C. HAS NOT BEEN RETAINED TO PERFORM CONTROLLED INSPECTIONS OF ANY KIND FOR THIS PROJECT.

NO.	DATE:	DESCRIPTION

REVISONS:

FILINGS:

PROJECT

526 UNION AVENUE
BROOKLYN, N.Y. 11211

FACADE RENOVATION AND BROWNSTONE REPAIR

DRAWING TITLE:

GENERAL NOTES

SEAL & SIGNATURE

DATE:	09-23-14
PROJECT NO:	
SCALE:	AS NOTED
DRAWING BY:	M.M.
CHECKED BY:	G.J.C.
DWG NO:	S-401.00
SHEET NO:	OF

BSCAN STICKER

DOB APPROVAL STAMP

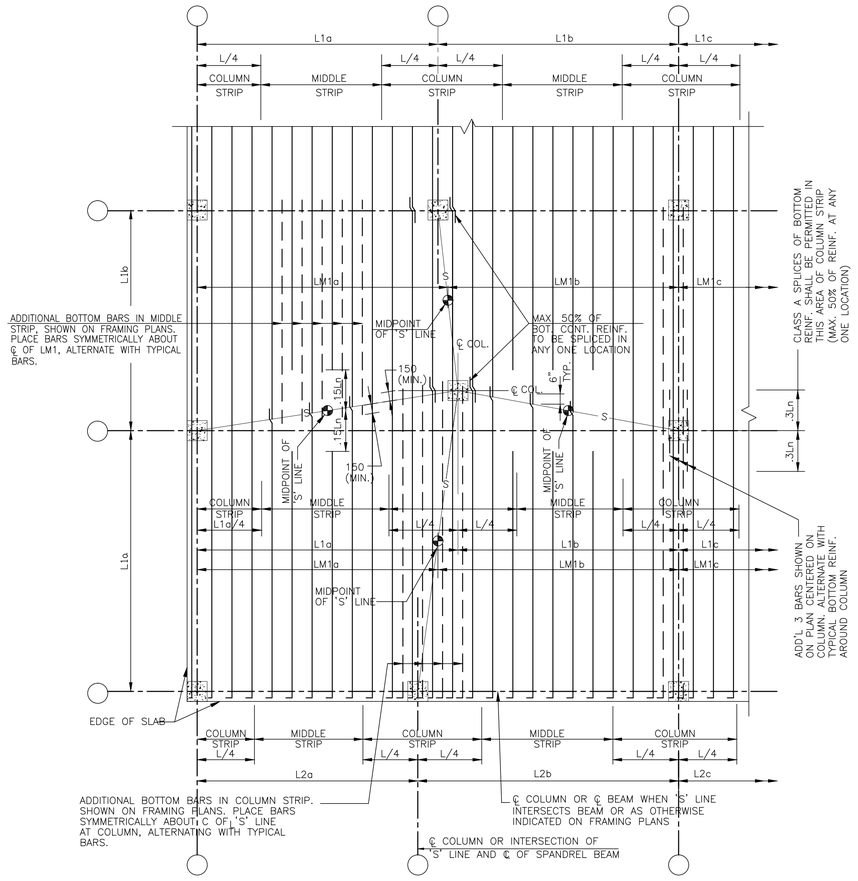

01
SCALE: NTS

BOTTOM BAR PLACEMENT FOR FLAT SLAB CONSTRUCTION

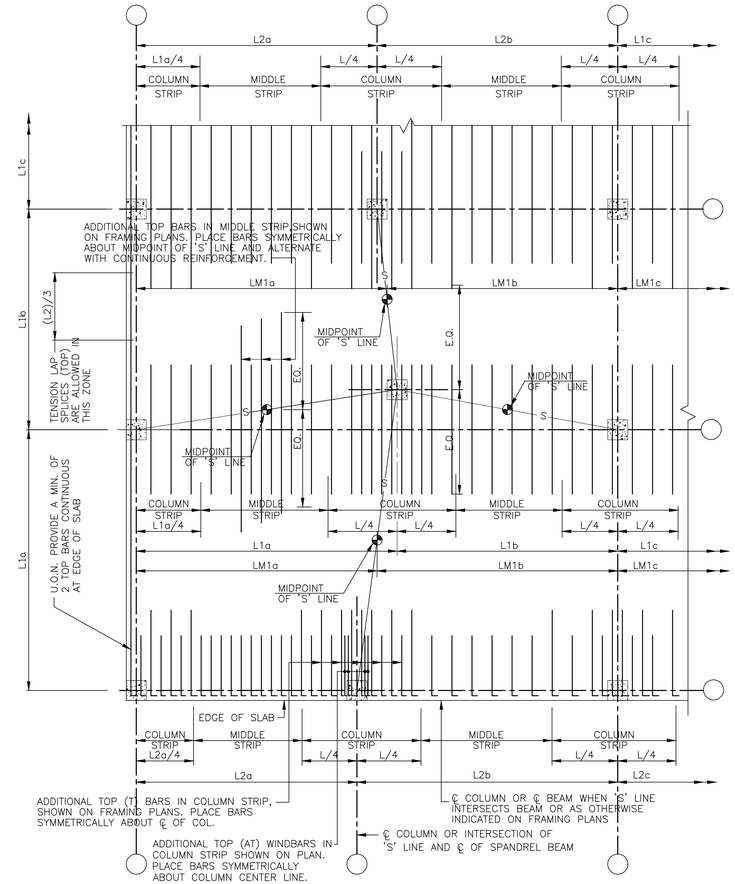

02
SCALE: NTS

TOP BAR PLACEMENT FOR FLAT SLAB CONSTRUCTION

1. ———— INDICATES TYPICAL TOP OR BOTTOM AND ADD'L TOP REINF. CALLED FOR ON FRAMING PLAN.
2. — — — — INDICATES ADD'L BOTTOM REINF. CALLED FOR ON FRAMING PLAN.
3. 50% OR MORE OF ADD'L BOTTOM REINFORCEMENT SHALL BE CONTINUOUS THROUGHOUT.
4. PLACE BOTTOM & TOP BARS IN THE EAST– WEST DIRECTION OF THE BUILDING IN THE OUTERMOST LAYERS, EXCEPT AS OTHERWISE NOTED.
5. PLACE BOTTOM & TOP REINF. IN THE NORTH– SOUTH DIRECTION OF THE BUILDING IN THE INNERMOST LAYERS, EXCEPT AS OTHERWISE NOTED.
6. BARS MARKED 'T' ARE TOP BARS, BARS MARKED 'B' ARE BOTTOM BARS.
7. SPANS (LC & LM) SHOWN ARE FOR DETERMINING WIDTH OF COLUMN & MIDDLE STRIPS & LENGTHS OF BARS. LC AND LM ARE THE LONGEST OF TWO ADJACENT SPANS.
8. BOTTOM REINFORCEMENT SPLICES WHERE REQUIRED SHALL BE CENTERED ON COL. ℄ , BM. ℄ OR 'S' LINE – 50% OF BOTTOM MIDDLE STRIP REINFORCEMENT MAY BE INTERRUPTED .15Ln FROM COLUMN LINE OR 'S' LINE.
9. 'S' LINES ARE OMITTED ON PLANS WHEN COLUMNS ALIGN ON A REGULAR GRID PATTERN AND THE 'S' LINES COINCIDE WITH COLUMN CENTER LINES.
10. BEAMS LOCATED IN FLAT SLAB AREAS SHALL BE CONSIDERED AS 'S' LINES FOR THE PURPOSE OF PLACEMENT OF REINFORCEMENT.
11. FOR SCHEDULE OF MINIMUM EMBEDMENT AND LAP SPLICE LENGTHS SEE DWG. S–403.
12. ALTERNATE CONT. & ADD'L. BARS WHEN NOT OTHERWISE INDICATED.
13. DROP PANELS SHALL BE PROVIDED ONLY WHEN INDICATED ON FRAMING PLANS OR BY NOTES.
14. AT LEAST TWO BARS IN EACH DIRECTION, TOP AND BOT., SHALL PASS WITHIN THE COLUMN CORE.
15. Ln IS THE CLEAR SPANS IN THE DIRECTION OF THE REINFORCING.
16. L IS THE LESSER OF L1 (IN THE DIRECTION OF THE SPAN) OR L2 (IN A DIRECTION PERPENDICULAR TO THE SPAN).

03
SCALE: NTS

BAR PLACEMENT NOTES

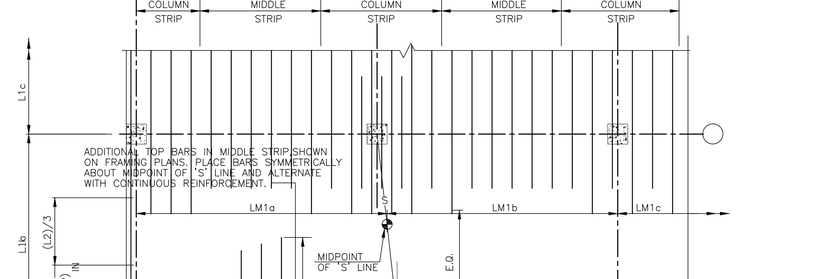

04
SCALE: NTS

COLUMN STRIP WITHOUT DROP PANELS

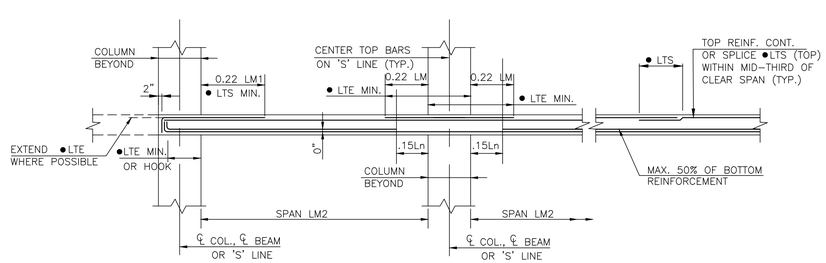

05
SCALE: NTS

MIDDLE STIP

STRUCTURAL ENGINEERING TECHNOLOGIES, P.C.

CONSULTING STRUCTURAL AND FOUNDATION ENGINEERS

40-12 28TH STREET
LONG ISLAND CITY, NY 11101
T(718)706-7196 F(718)472-4464

ALL RIGHTS RESERVED
ALL DRAWINGS SPECIFICATIONS AND COPIES THEREOF FURNISHED BY S.E.T., P.C. ARE AND WILL REMAIN THEIR PROPERTY. THEY ARE NOT TO BE USED ON THIS OR ANY OTHER PROJECT UNLESS WRITTEN PERMISSION IS GIVEN.

OWNER:

NOTE:
STRUCTURAL ENGINEERING TECHNOLOGIES, P.C. HAS NOT BEEN RETAINED TO PERFORM CONTROLLED INSPECTIONS OF ANY KIND FOR THIS PROJECT.

NO.	DATE:	DESCRIPTION

REVISONS:

FILINGS:

PROJECT

526 UNION AVENUE
BROOKLYN, N.Y. 11211

FACADE RENOVATION AND BROWNSTONE REPAIR

DRAWING TITLE:

TYPICAL DETAILS

SEAL & SIGNATURE

DATE: 09-23-14
PROJECT NO:
SCALE: AS NOTED
DRAWING BY: M.M.
CHECKED BY: G.J.C.
DWG NO: S-402.00
SHEET NO: OF

BSCAN STICKER

DOB APPROVAL STAMP

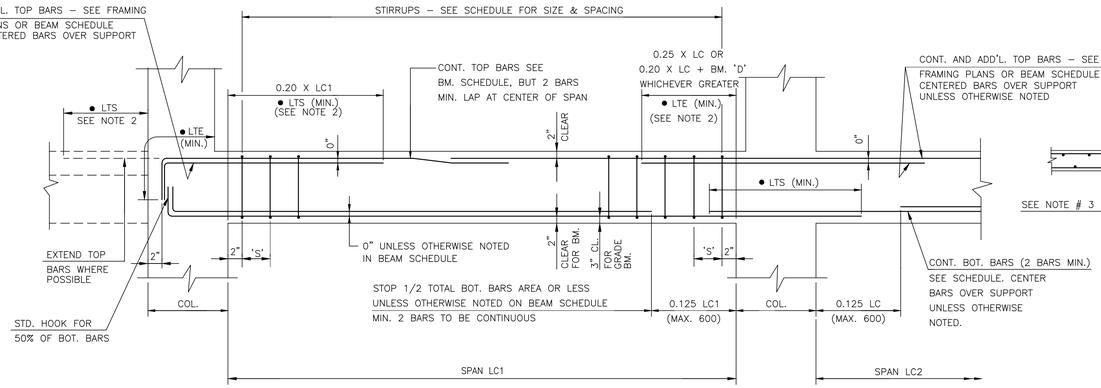

ELEVATION

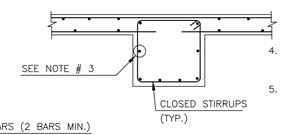

SECTION

(LC= LONGER OF TWO ADJACENT SPANS LC1 OR LC2)

NOTES:

1. UPTURNED BEAMS MUST BE PLACED MONOLITHICALLY FOR FULL TOTAL DEPTH OF BEAMS. COLUMNS SUPPORTING UPTURNED BEAMS MUST BE POURED MONOLITHICALLY WITH BEAMS FOR FULL TOTAL DEPTH OF BEAMS.
2. SEE "SCHEDULE OF EMBEDMENT & LAP SPLICE LENGTHS" ON DWG. S/403.
3. PROVIDE #5 @ 12"O.C. HORIZONTAL BARS AT EACH VERTICAL FACE FOR BEAMS 24" OR MORE IN DEPTH UNLESS OTHERWISE NOTED IN SECTIONS.
4. ALL HOOKS ON STIRRUPS TO BE SEISMIC HOOKS.
5. THIS DETAIL ALSO APPLIES TO GRADE BEAMS UNLESS OTHERWISE NOTED ON PLANS AND DETAILS.
6. AT ALL BEAM–TO–GIRDER INTERSECTIONS, PLACE GIRIDER REINFORCING OUTSIDE THE REINFORCING FOR BEAM. (GIRDER IS A BEAM SUPPORTING OTHER BEAMS).
7. MULTIPLE LAYERS OF BARS ARE SHOWN ON BEAM SCHEDULE AS (A+B+C), WHERE A– INDICATES NUMBER OF BARS IN 1st (OUTER) LAYER, B– INDICATES NUMBER OF BARS IN 2nd LAYER, C– IN 3rd, ETC..

01 SCALE: NTS — CONCRETE BEAM

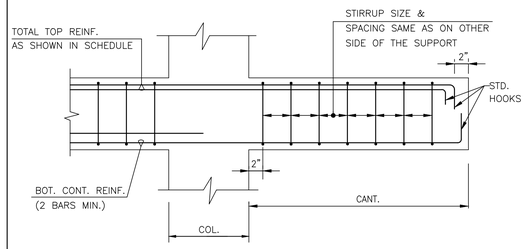

02 SCALE: NTS — CONRETE BEAM WITH CANTILEVER

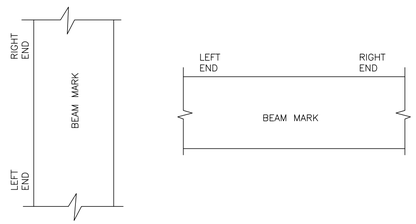

03 SCALE: NTS — DEFINITION OF CONRETE BEAM ORIENTATION

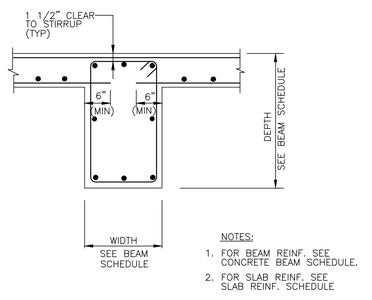

NOTES:

1. FOR BEAM REINF. SEE CONCRETE BEAM SCHEDULE.
2. FOR SLAB REINF. SEE SLAB REINF. SCHEDULE

04 SCALE: NTS — CONCRETE BEAM SUPPORTING ONE WAY CONCRETE SLAB

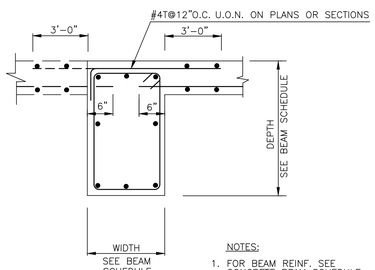

NOTES:

1. FOR BEAM REINF. SEE CONCRETE BEAM SCHEDULE.
2. FOR SLAB REINF. SEE SLAB REINF. SCHEDULE

05 SCALE: NTS — CONCRETE BEAM PARALLEL TO ONE WAY CONCRETE SLAB

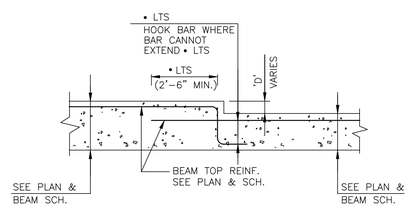

STEP AT TOP
(FOR 'D' GREATER THAN 2" MM)

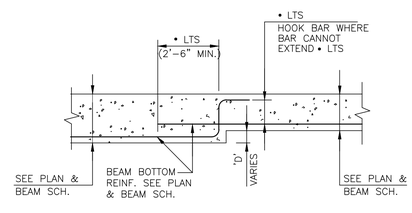

STEP AT BOTTOM

06 SCALE: NTS — STEPS IN BEAM

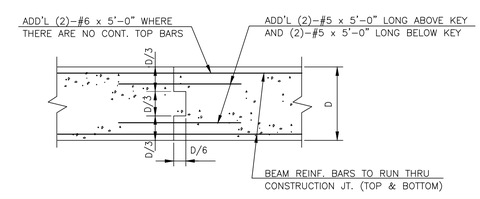

07 SCALE: NTS — CONSTRUCTION JOINT

STRUCTURAL ENGINEERING TECHNOLOGIES, P.C.

CONSULTING STRUCTURAL AND FOUNDATION ENGINEERS

40-12 28TH STREET
LONG ISLAND CITY, NY 11101
T(718)706-7196 F(718)472-4464

ALL RIGHTS RESERVED
ALL DRAWINGS SPECIFICATIONS AND COPIES THEREOF FURNISHED BY S.E.T., P.C. ARE AND WILL REMAIN THEIR PROPERTY. THEY ARE NOT TO BE USED ON THIS OR ANY OTHER PROJECT UNLESS WRITTEN PERMISSION IS GIVEN.

OWNER:

NOTE:
STRUCTURAL ENGINEERING TECHNOLOGIES, P.C. HAS NOT BEEN RETAINED TO PERFORM CONTROLLED INSPECTIONS OF ANY KIND FOR THIS PROJECT.

NO.	DATE:	DESCRIPTION

REVISONS:

FILINGS:

PROJECT

526 UNION AVENUE
BROOKLYN, N.Y. 11211

FACADE RENOVATION AND BROWNSTONE REPAIR

DRAWING TITLE:

TYPICAL DETAILS

SEAL & SIGNATURE

DATE:	09-23-14
PROJECT NO:	
SCALE:	AS NOTED
DRAWING BY:	M.M.
CHECKED BY:	G.J.C.
DWG NO:	S-404.00
SHEET NO:	OF

BSCAN STICKER

DOB APPROVAL STAMP

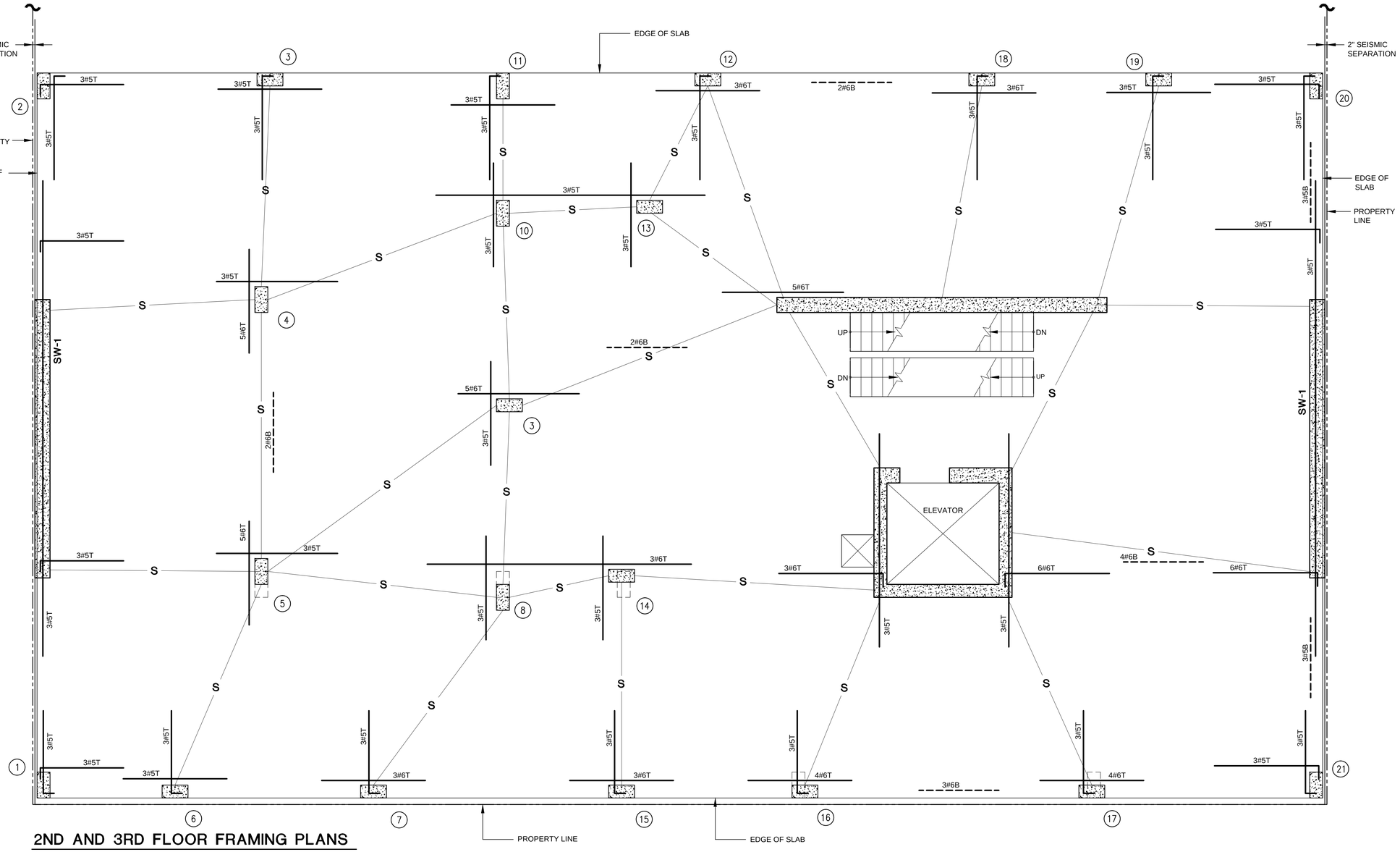

2ND AND 3RD FLOOR FRAMING PLANS

SCALE: 1/4" = 1'-0"

NOTES:

1. TOP OF SLAB IS AT ELEVATION

2. SLAB SHALL BE 8" U.O.N.`

3. TYPICAL SLAB REINFORCING SHALL BE #4@12" EACH WAY TOP AND #4@12" EACH. WAY BOTTOM. REINFORCING SHOWN ON PLAN IS ADDITIONAL TO TYPICAL REINFORCING.

4. FOR TYPICAL DETAILS SEE SERIES S-400 DRAWINGS.

5. FOR COLUMN SCHEDULE AND SHEAR WALL DETAILS SEE SERIES S-300 DRAWINGS.

6. ALL REINF. BARS IN CONCRETE EXPOSED TO MOISTURE IN SERVICE SUCH AS BALCONIES, TERRACES SHALL BE EPOXY-COATED.

STRUCTURAL ENGINEERING TECHNOLOGIES, P.C.

CONSULTING STRUCTURAL AND FOUNDATION ENGINEERS

40-12 28TH STREET
LONG ISLAND CITY, NY 11101
T(718)706-7196 F(718)472-4464

ALL RIGHTS RESERVED
ALL DRAWINGS SPECIFICATIONS AND COPIES THEREOF FURNISHED BY S.E.T., P.C. ARE AND WILL REMAIN THEIR PROPERTY. THEY ARE NOT TO BE USED ON THIS OR ANY OTHER PROJECT UNLESS WRITTEN PERMISSION IS GIVEN.

OWNER:

NOTE:
STRUCTURAL ENGINEERING TECHNOLOGIES, P.C. HAS NOT BEEN RETAINED TO PERFORM CONTROLLED INSPECTIONS OF ANY KIND FOR THIS PROJECT.

NO.	DATE:	DESCRIPTION

REVISONS:

FILINGS:

PROJECT

526 UNION AVENUE

FACADE RENOVATION AND BROWNSTONE REPAIR

DRAWING TITLE:

2ND AND 3RD FLOOR FRAMING PLANS

SEAL & SIGNATURE

DATE:	09-23-14
PROJECT NO:	
SCALE:	AS NOTED
DRAWING BY:	M.M.
CHECKED BY:	G.J.C.
DWG NO:	**S-101.00**
SHEET NO:	OF

BSCAN STICKER

DOB APPROVAL STAMP

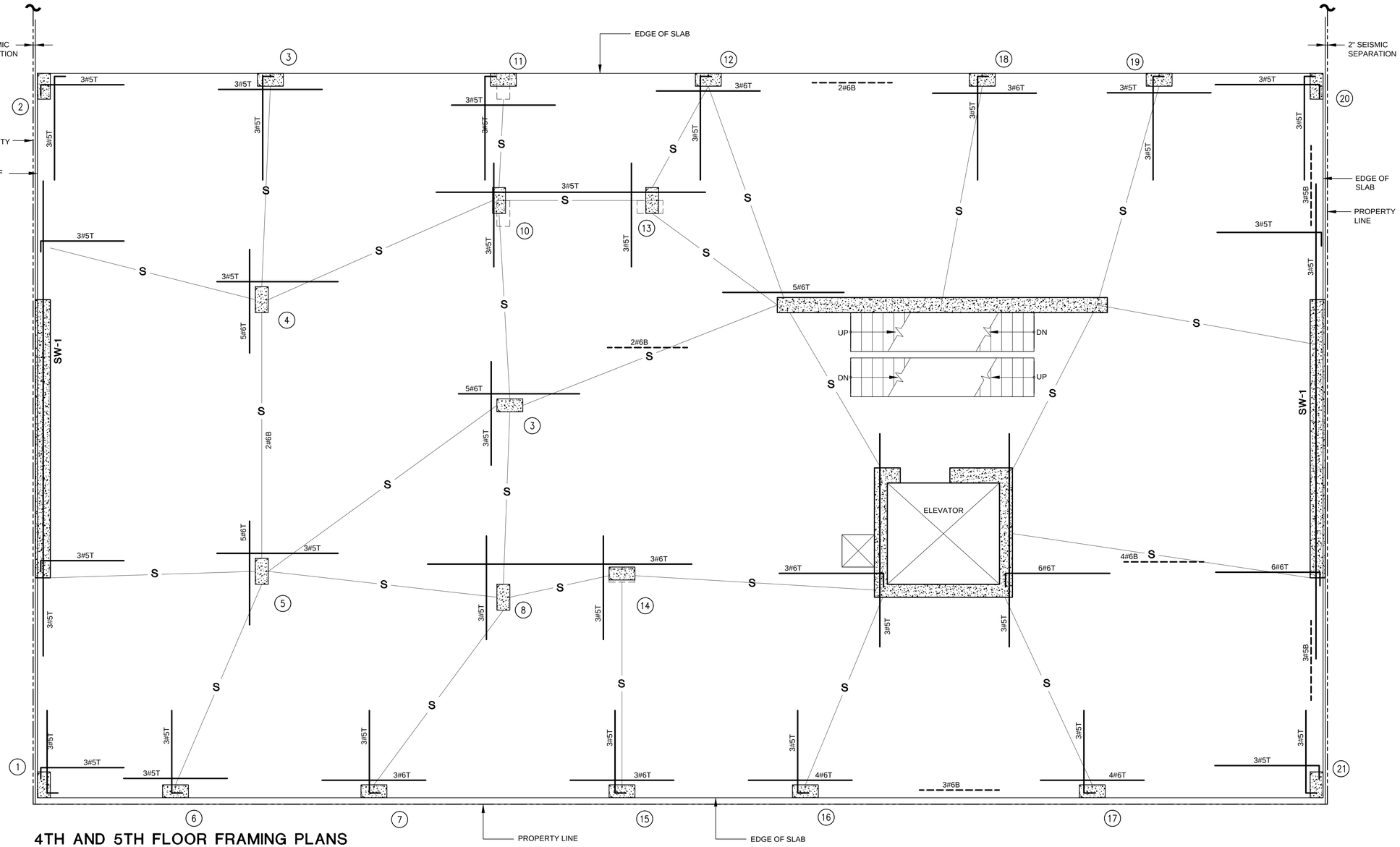

4TH AND 5TH FLOOR FRAMING PLANS

SCALE: 1/4" = 1'-0"

NOTES:

1. TOP OF SLAB IS AT ELEVATION

2. SLAB SHALL BE 8" U.O.N.

3. TYPICAL SLAB REINFORCING SHALL BE #4@12" EACH WAY TOP AND #4@12" EACH. WAY BOTTOM. REINFORCING SHOWN ON PLAN IS ADDITIONAL TO TYPICAL REINFORCING.

4. FOR TYPICAL DETAILS SEE SERIES S-400 DRAWINGS.

5. FOR COLUMN SCHEDULE AND SHEAR WALL DETAILS SEE SERIES S-300 DRAWINGS.

6. ALL REINF. BARS IN CONCRETE EXPOSED TO MOISTURE IN SERVICE SUCH AS BALCONIES, TERRACES SHALL BE EPOXY-COATED.

STRUCTURAL ENGINEERING TECHNOLOGIES, P.C.

CONSULTING STRUCTURAL AND FOUNDATION ENGINEERS

40-12 28TH STREET
LONG ISLAND CITY, NY 11101
T(718)706-7196 F(718)472-4464

ALL RIGHTS RESERVED

ALL DRAWINGS SPECIFICATIONS AND COPIES THEREOF FURNISHED BY S.E.T., P.C. ARE AND WILL REMAIN THEIR PROPERTY. THEY ARE NOT TO BE USED ON THIS OR ANY OTHER PROJECT UNLESS WRITTEN PERMISSION IS GIVEN.

OWNER:

NOTE:
STRUCTURAL ENGINEERING TECHNOLOGIES, P.C. HAS NOT BEEN RETAINED TO PERFORM CONTROLLED INSPECTIONS OF ANY KIND FOR THIS PROJECT.

NO.	DATE:	DESCRIPTION

REVISONS:

FILINGS:

PROJECT

526 UNION AVENUE

FACADE RENOVATION AND BROWNSTONE REPAIR

DRAWING TITLE:

4TH AND 5TH FLOOR FRAMING PLANS

SEAL & SIGNATURE

DATE:	09-23-14
PROJECT NO:	
SCALE:	AS NOTED
DRAWING BY:	M.M.
CHECKED BY:	G.J.C.
DWG NO:	S-102.00
SHEET NO:	OF

BSCAN STICKER

DOB APPROVAL STAMP

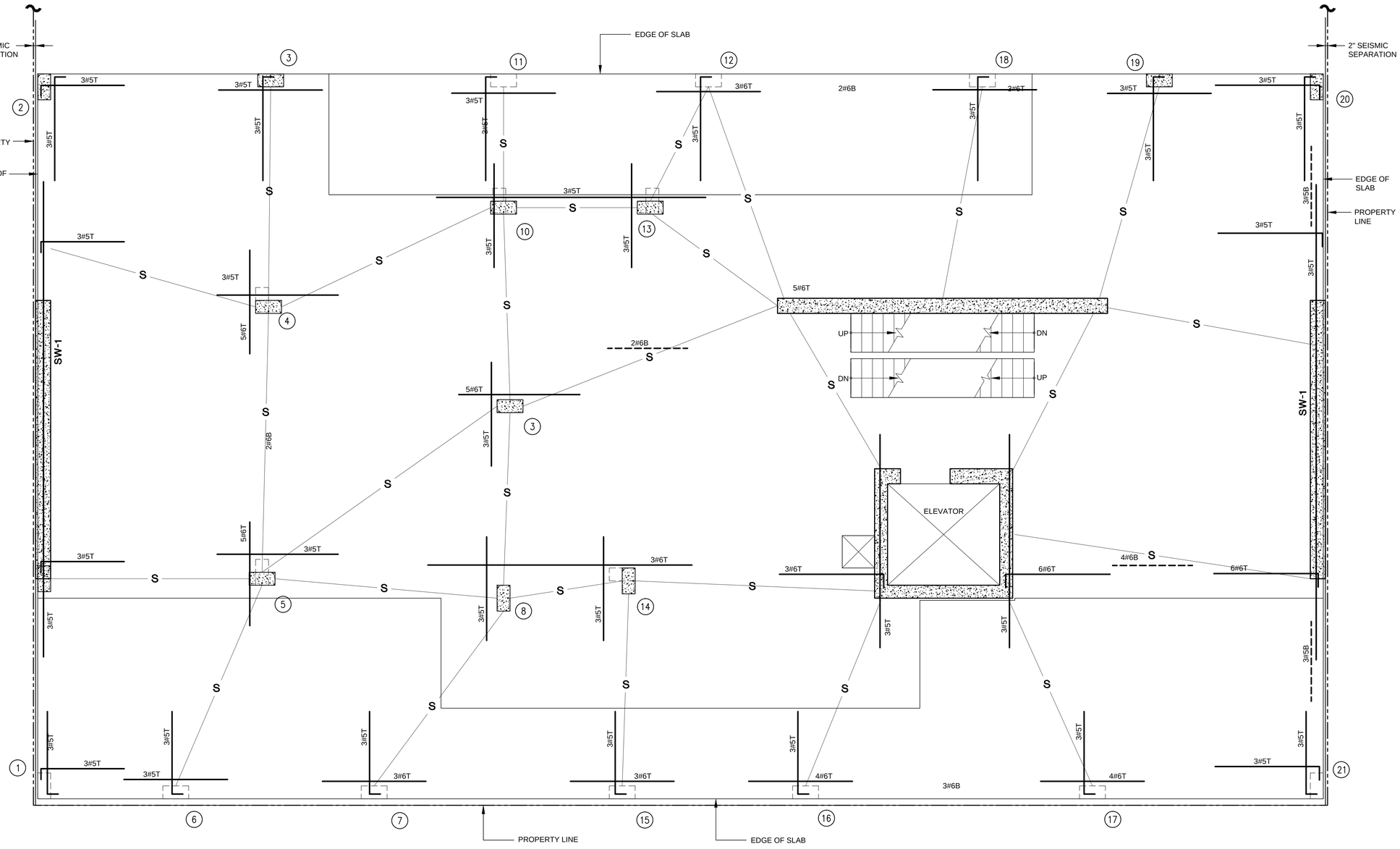

6TH FLOOR FRAMING PLAN

SCALE: 1/4" = 1'-0"

NOTES:

1. TOP OF SLAB IS AT ELEVATION

2. SLAB SHALL BE 8" U.O.N.

3. TYPICAL SLAB REINFORCING SHALL BE #5@12" EACH WAY TOP AND #4@12" EACH. WAY BOTTOM. REINFORCING SHOWN ON PLAN IS ADDITIONAL TO TYPICAL REINFORCING.

4. FOR TYPICAL DETAILS SEE SERIES S-400 DRAWINGS.

5. FOR COLUMN SCHEDULE AND SHEAR WALL DETAILS SEE SERIES S-300 DRAWINGS.

6. ALL REINF. BARS IN CONCRETE EXPOSED TO MOISTURE IN SERVICE SUCH AS BALCONIES, TERRACES SHALL BE EPOXY-COATED.

STRUCTURAL ENGINEERING TECHNOLOGIES, P.C.

CONSULTING STRUCTURAL AND FOUNDATION ENGINEERS

40-12 28TH STREET
LONG ISLAND CITY, NY 11101
T(718)706-7196 F(718)472-4464

ALL RIGHTS RESERVED

ALL DRAWINGS SPECIFICATIONS AND COPIES THEREOF FURNISHED BY S.E.T., P.C. ARE AND WILL REMAIN THEIR PROPERTY. THEY ARE NOT TO BE USED ON THIS OR ANY OTHER PROJECT UNLESS WRITTEN PERMISSION IS GIVEN.

OWNER:

NOTE:
STRUCTURAL ENGINEERING TECHNOLOGIES, P.C. HAS NOT BEEN RETAINED TO PERFORM CONTROLLED INSPECTIONS OF ANY KIND FOR THIS PROJECT.

NO.	DATE:	DESCRIPTION

REVISONS:

FILINGS:

PROJECT

526 UNION AVENUE

FACADE RENOVATION AND BROWNSTONE REPAIR

DRAWING TITLE:

6TH FLOOR FRAMING PLAN

SEAL & SIGNATURE

DATE:	09-23-14
PROJECT NO:	
SCALE:	AS NOTED
DRAWING BY:	M.M.
CHECKED BY:	G.J.C.
DWG NO:	**S-103.00**
SHEET NO:	OF

BSCAN STICKER

DOB APPROVAL STAMP

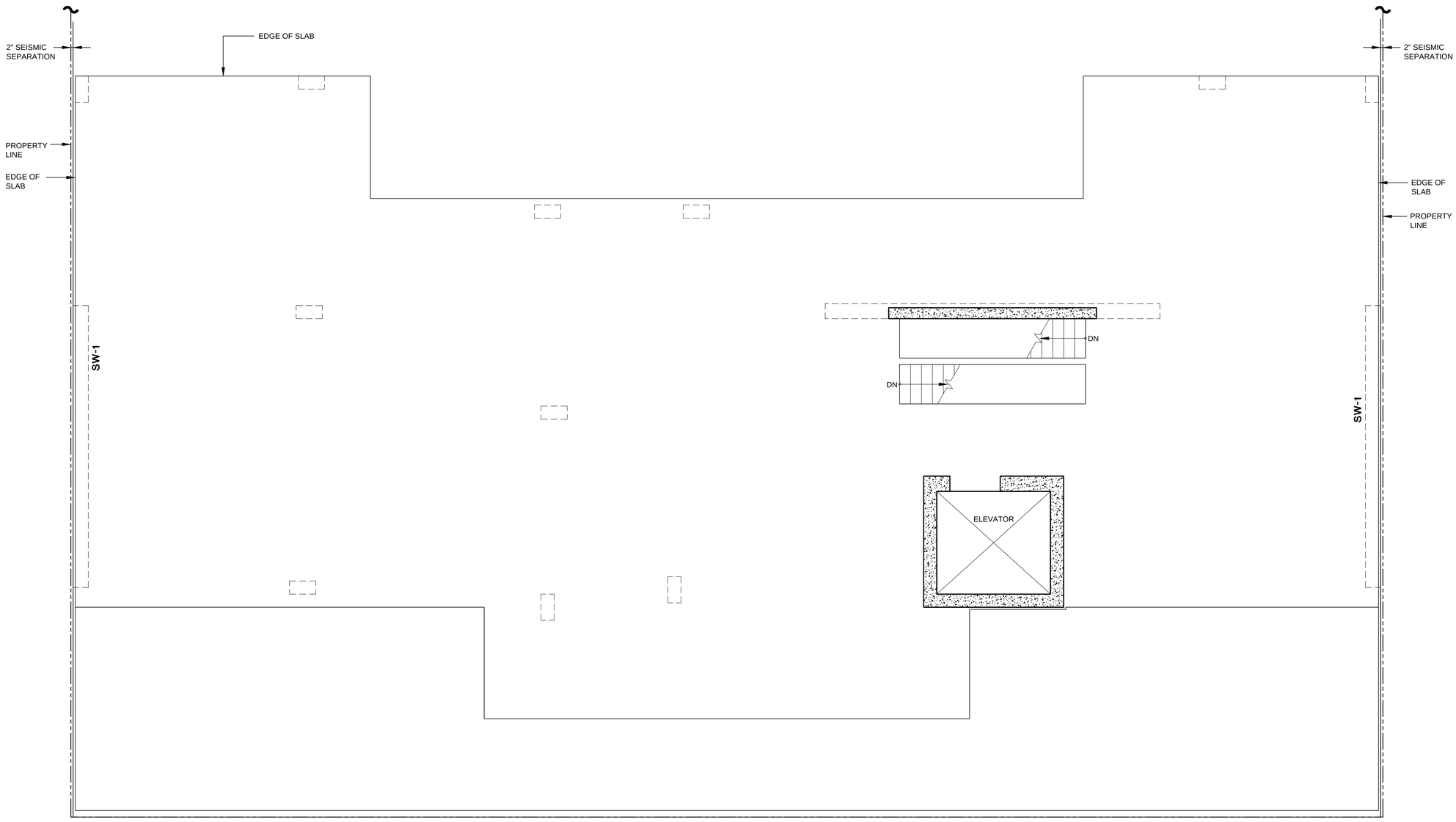

ROOF FRAMING PLAN

SCALE: 1/4" = 1'-0"

NOTES:

1. TOP OF SLAB IS AT ELEVATION

2. SLAB SHALL BE 8" U.O.N.

3. TYPICAL SLAB REINFORCING SHALL BE #5@12" EACH WAY TOP AND #4@12" EACH. WAY BOTTOM. REINFORCING SHOWN ON PLAN IS ADDITIONAL TO TYPICAL REINFORCING.

4. FOR TYPICAL DETAILS SEE SERIES S-400 DRAWINGS.

5. FOR COLUMN SCHEDULE AND SHEAR WALL DETAILS SEE SERIES S-300 DRAWINGS.

6. ALL REINF. BARS IN CONCRETE EXPOSED TO MOISTURE IN SERVICE SUCH AS BALCONIES, TERRACES SHALL BE EPOXY-COATED.

STRUCTURAL ENGINEERING TECHNOLOGIES, P.C.

CONSULTING STRUCTURAL AND FOUNDATION ENGINEERS

40-12 28TH STREET
LONG ISLAND CITY, NY 11101
T(718)706-7196 F(718)472-4464

ALL RIGHTS RESERVED
ALL DRAWINGS SPECIFICATIONS AND COPIES THEREOF FURNISHED BY S.E.T., P.C. ARE AND WILL REMAIN THEIR PROPERTY. THEY ARE NOT TO BE USED ON THIS OR ANY OTHER PROJECT UNLESS WRITTEN PERMISSION IS GIVEN.

OWNER:

NOTE:
STRUCTURAL ENGINEERING TECHNOLOGIES, P.C. HAS NOT BEEN RETAINED TO PERFORM CONTROLLED INSPECTIONS OF ANY KIND FOR THIS PROJECT.

NO.	DATE:	DESCRIPTION

REVISONS:

FILINGS:

PROJECT

526 UNION AVENUE

FACADE RENOVATION AND BROWNSTONE REPAIR

DRAWING TITLE:

ROOF FRAMING PLAN

SEAL & SIGNATURE

DATE:	09-23-14
PROJECT NO:	
SCALE:	AS NOTED
DRAWING BY:	M.M.
CHECKED BY:	G.J.C.
DWG NO:	**S-104.00**
SHEET NO:	OF

BSCAN STICKER

DOB APPROVAL STAMP

APPENDIX 2

CITIZEN PARTICIPATION PLAN

The NYC Office of Environmental Remediation and Tryad Group have established this Citizen Participation Plan because the opportunity for citizen participation is an important component of the NYC Voluntary Cleanup Program. This Citizen Participation Plan describes how information about the project will be disseminated to the Community during the remedial process. As part of its obligations under the NYC VCP, Tryad Group will maintain a repository for project documents and provide public notice at specified times throughout the remedial program. This Plan also takes into account potential environmental justice concerns in the community that surrounds the project Site. Under this Citizen Participation Plan, project documents and work plans are made available to the public in a timely manner. Public comment on work plans is strongly encouraged during public comment periods. Work plans are not approved by the NYC Office of Environmental Remediation (OER) until public comment periods have expired and all comments are formally reviewed. An explanation of cleanup plans in the form of a public meeting or informational session is available upon request to OER's project manager assigned to this Site, Samantha Morris, who can be contacted about these issues or any others questions, comments or concerns that arise during the remedial process at (212) 788-8841.

Project Contact List: OER has established a Site Contact List for this project to provide public notices in the form of fact sheets to interested members of the Community. Communications will include updates on important information relating to the progress of the cleanup program at the Site as well as to request public comments on the cleanup plan. The Project Contact List includes owners and occupants of adjacent buildings and homes, principal administrators of nearby schools, hospitals and day care centers, the public water supplier that serves the area, established document repositories, the representative Community Board, City Council members, other elected representatives and any local Brownfield Opportunity Area (BOA) grantee organizations. Any member of the public or organization will be added to the

Site Contact List on request. A copy of the Site Contact List is maintained by OER's project manager. If you would like to be added to the Project Contact List, contact NYC OER at (212) 788-8841 or by email at brownfields@cityhall.nyc.gov.

Repositories: A document repository is maintained online. Internet access to view OER's document repositories is available at public libraries. This document repository is intended to house, for community review, all principal documents generated during the cleanup program including Remedial Investigation plans and reports, Remedial Action work plans and reports, and all public notices and fact sheets produced during the lifetime of the remedial project. The library nearest the Site is:
Brooklyn Library
81 Devoe Street
718-486-3365
10 AM- 5 PM

Digital Documentation: NYC OER requires the use of digital documents in our repository as a means of minimizing paper use while also increasing convenience in access and ease of use.

Issues of Public Concern: No issues of public concern have been identified as of the date of this RAP.

Public Notice and Public Comment: Public notice to all members of the Project Contact List is required at three major steps during the performance of the cleanup program (listed below) and at other points that may be required by OER. Notices will include Fact Sheets with descriptive project summaries, updates on recent and upcoming project activities, repository information, and important phone and email contact information. All notices will be reviewed and approved by OER prior to distribution and mailed by the Enrollee. Public comment is solicited in public notices for all work plans developed under the NYC Voluntary Cleanup Program. Final review of all work plans by OER will consider all public comments. Approval will not be granted until the public comment period has been completed.

Citizen Participation Milestones: Public notice and public comment activities occur at several steps during a typical NYC VCP project. These steps include:

- **Public Notice of the availability of the Remedial Investigation Report and Remedial Action Work Plan and a 30-day public comment period on the Remedial Action Work Plan:** Public notice in the form of a Fact Sheet is sent to all parties listed on the Site Contact List announcing the availability of the Remedial Investigation Report and Remedial Action Work Plan and the initiation of a 30-day public comment period on the Remedial Action Work Plan. The Fact Sheet summarizes the findings of the RIR and provides details of the RAWP. The public comment period will be extended an additional 15 days upon public request. A public meeting or informational session will be conducted by OER upon request.
- **Public Notice announcing the approval of the RAWP and the start of remediation:** Public notice in the form of a Fact Sheet is sent to all parties listed on the Site Contact List announcing the approval of the RAWP and the start of remediation.
- **Public Notice announcing the completion of remediation, designation of Institutional and Engineering Controls and issuance of the Notice of Completion:** Public notice in the form of a Fact Sheet is sent to all parties listed on the Site Contact List announcing the completion of remediation, providing a list of all Institutional and Engineering Controls implemented for to the Site and announcing the issuance of the Notice of Completion.

APPENDIX 3

SUSTAINABILITY STATEMENT

This Sustainability Statement documents sustainable activities and green remediation efforts planned under this remedial action.

The Tryad Group, under this RAWP, will make its best practicable efforts to employ sustainable means to implement the selected remedy defined in this RAWP and subsequent redevelopment including those that take into consideration the sustainability, resilience and equity goals defined in PlaNYC. Such goals include but are not limited to: maximizing the recycling and reuse of clean, non-virgin materials, including the use of the NYC Clean Soil Bank; reducing the consumption of virgin and non-renewable resources; minimizing energy consumption and greenhouse gas emissions; improving energy efficiency; and enhancing biodiversity during landscaping associated with Site development.

Reuse of Clean, Recyclable Materials and Reduced Consumption of Non-Renewable Resources: The Tryad Group, under this RAWP, will make its best practicable efforts for the reuse of clean, locally-derived recyclable materials to reduce consumption of non-renewable virgin resources that can provide energy savings and greenhouse gas reduction.

Discuss plans for reuse of clean, non-virgin materials in the selected remedial action and redevelopment. Examples include the reuse and recycling of concrete aggregate, stone and masonry derived from the Site, or imported from local sources for reuse as backfill of remedial excavations. Include the following text somewhere in this section:

Import of soils onto the property will be performed in conformance with the Soil/Materials Management Plan in Appendix 1.

At this time, reuse of material from this site is not anticipated. An estimate of the quantity (in tons) of clean, non-virgin materials (reported by type of material) reused under this plan will be quantified and reported in the RAR.

Reduced Energy Consumption and Promotion of Greater Energy Efficiency: Reduced energy consumption lowers greenhouse gas emissions, improves local air quality, lessens in-city power generation requirements, can lower traffic congestion, and provides substantial cost savings.

The Tryad Group, under this RAWP, will make its best practicable efforts for the reduction of energy consumption and for the implementation of greater energy efficiency in the selected remedial action and related redevelopment. This may include but are not limited to the use of locally derived backfill materials, which minimizes truck transport for imported material, the use of higher fuel efficiency transport technology, and the use of renewable energy sources to power remedial systems.

Best efforts will be made to quantify energy efficiencies achieved during the remediation and will be reported in the Remedial Action Report (RAR). Where energy savings cannot be easily quantified, a gross indicator of the amount of energy saved or the means by which energy savings was achieved will be reported.

Conversion to Clean Fuels: Use of clean fuel improves NYC's air quality by reducing harmful emissions.

The Tryad Group, under this RAWP, will make its best practicable efforts for the increased use of clean fuels in the selected remedial action and redevelopment. This may include but are not limited to the selection of clean diesel and low sulfur fuels for construction and use of natural gas for the new building.

An estimate of the volume of clean fuels used during remedial activities will be quantified and reported in the RAR.

Recontamination Control: Recontamination after cleanup and redevelopment is completed undermines the value of work performed, may result in a property that is less protective of public health or the environment, and may necessitate additional cleanup work later

or impede future redevelopment. Recontamination can arise from future releases that occur within the property or by influx of contamination from off-Site.
The Tryad Group will utilize recontamination controls in the selected remedy and development. including, but are not limited to, on-Site controls that provide protection against recontamination originating from currently unknown off-Site sources, including vapor barriers and a passive sub-slab depressurization system that can eliminate the risk of future migration of soil vapor contamination from off-Site), and controls employed on-Site to prevent the occurrence of new contamination (i.e., site covers, double walled containment around fuel systems to prevent leakage into the environment).

An estimate of the area of the Site that utilizes recontamination controls under this plan will be reported in the RAR in square feet.

Stormwater Retention: Stormwater retention improves water quality by lowering the rate of combined stormwater and sewer discharges to NYC's sewage treatment plants during periods of precipitation, and reduces the volume of untreated influent to local surface waters. At this time, no stormwater retention is proposed for this Site.

Linkage with Green Building: Green buildings provide a multitude of benefits to the city across a broad range of areas, such as reduction of energy consumption, conservation of resources, and reduction in toxic materials use. As part of the final RAR, all green building infrastructure designed and installed will be reported.
The total square footage of green building space created as a function of this brownfield redevelopment will be quantified for residential, commercial and industrial/manufacturing uses.

Paperless Voluntary Cleanup Program: Enrollee is participating in OER's Paperless Voluntary Cleanup Program. Under this program, submission of electronic documents will replace submission of hard copies for the review of project documents, communications and milestone reports.

Low-Energy Project Management Program: Enrollee is participating in OER's low-energy project management program. Under this program, whenever possible, meetings are held using remote communication technologies, such as videoconferencing and teleconferencing to reduce energy consumption and traffic congestion associated with personal transportation.

Trees and Plantings: Trees and other plantings provide habitat and add to NYC's environmental quality in a wide variety of ways. Native plant species and native habitat provide optimal support to local fauna, promote local biodiversity, and require less maintenance. At the time of this RAWP, no trees or plantings are proposed for this Site.

APPENDIX 4

SOIL/MATERIALS MANAGEMENT PLAN

1.1 Soil Screening Methods

Visual, olfactory and PID soil screening and assessment will be performed under the supervision of a Qualified Environmental Professional and will be reported in the final remedial report. Soil screening will be performed during invasive work performed during the remedy and development phases prior to issuance of final signoff by OER.

1.2 Stockpile Methods

Excavated soil from suspected areas of contamination (e.g., hot spots, USTs, drains, etc.) will be stockpiled separately and will be segregated from clean soil and construction materials. Stockpiles will be used only when necessary and will be removed as soon as practicable. While stockpiles are in place, they will be inspected daily, and before and after every storm event. Results of inspections will be recorded in a logbook and maintained at the Site and available for inspection by OER. Excavated soils will be stockpiled on, at minimum, double layers of 8-mil minimum sheeting, will be kept covered at all times with appropriately anchored plastic tarps, and will be routinely inspected. Broken or ripped tarps will be promptly replaced.
All stockpile activities will be compliant with applicable laws and regulations. Soil stockpile areas will be appropriately graded to control run-off in accordance with applicable laws and regulations. Stockpiles of excavated soils and other materials shall be located at least of 50 feet from the property boundaries, where possible. Hay bales or equivalent will surround soil stockpiles except for areas where access by equipment is required. Silt fencing and hay bales will be used as needed near catch basins, surface waters and other discharge points.

1.3 Characterization of Excavated Materials

Soil/fill or other excavated media that is transported off-Site for disposal will be sampled in a manner required by the receiving facility, and in compliance with applicable laws and regulations. Soils proposed for reuse on-Site will be managed as defined in this plan.

1.4 Materials Excavation, Load-Out, and Departure

The PE/QEP overseeing the remedial action will:

- oversee remedial work and the excavation and load-out of excavated material;
- ensure that there is a party responsible for the safe execution of invasive and other work performed under this work plan;
- ensure that Site development activities and development-related grading cuts will not interfere with, or otherwise impair or compromise the remedial activities proposed in this RAWP;
- ensure that the presence of utilities and easements on the Site has been investigated and that any identified risks from work proposed under this plan are properly addressed by appropriate parties;
- ensure that all loaded outbound trucks are inspected and cleaned if necessary before leaving the Site;
- ensure that all egress points for truck and equipment transport from the Site will be kept clean of Site-derived materials during Site remediation.

Locations where vehicles exit the Site shall be inspected daily for evidence of soil tracking off premises. Cleaning of the adjacent streets will be performed as needed to maintain a clean condition with respect to Site-derived materials.

Open and uncontrolled mechanical processing of historical fill and contaminated soil on-Site will not be performed without prior OER approval.

1.5 Off-Site Materials Transport

Loaded vehicles leaving the Site will comply with all applicable materials transportation requirements (including appropriate covering, manifests, and placards) in accordance with applicable laws and regulations, including use of licensed haulers in accordance with 6 NYCRR Part 364. If loads contain wet material capable of causing leakage from trucks, truck liners will be used. Queuing of trucks will be performed on-Site, when possible in order to minimize off Site disturbance. Off-Site queuing will be minimized.

Outbound truck transport routes are described in the remedial report. This routing takes into account the following factors: (a) limiting transport through residential areas and past sensitive sites; (b) use of mapped truck routes; (c) minimizing off-Site queuing of trucks entering the facility; (d) limiting total distance to major highways; (e) promoting safety in access to highways; and (f) overall safety in transport. To the extent possible, all trucks loaded with Site materials will travel from the Site using these truck routes. Trucks will not stop or idle in the neighborhood after leaving the project Site.

1.6 Materials Disposal Off-Site

The following documentation will be established and reported by the PE/QEP for each disposal destination used in this project to document that the disposal of regulated material exported from the Site conforms with applicable laws and regulations: (1) a letter from the PE/QEP or Enrollee to each disposal facility describing the material to be disposed and requesting written acceptance of the material. This letter will state that material to be disposed is regulated material generated at an environmental remediation Site in New York City under a governmental remediation program. The letter will provide the project identity and the name and phone number of the PE/QEP or Enrollee. The letter will include as an attachment a summary of all chemical data for the material being transported; and (2) a letter from each disposal facility stating it is in receipt of the correspondence (1, above) and is approved to accept the material. These documents will be included in the final remedial report.

The Remedial Action Report will include an itemized account of the destination of all material removed from the Site during this remedial action. Documentation associated with disposal of all material will include records and approvals for receipt of the material. This information will be presented in the final remedial report.

All impacted soil/fill or other waste excavated and removed from the Site will be managed as regulated material and will be disposed in accordance with applicable laws and regulations. Historic fill and contaminated soils taken off-Site will be handled as solid waste and will not be disposed at a Part 360-16 Registration Facility (also known as a Soil Recycling Facility). Waste characterization will be performed for off-Site disposal in a manner required by the receiving facility and in conformance with its applicable permits. Waste characterization sampling and analytical methods, sampling frequency, analytical results and QA/QC will be

reported in the final remedial report. A manifest system for off-Site transportation of exported materials will be employed. Manifest information will be reported in the final remedial report. Hazardous wastes derived from on-Site will be stored, transported, and disposed of in compliance with applicable laws and regulations.

If disposal of soil/fill from this Site is proposed for unregulated disposal (i.e., clean soil removed for development purposes), including transport to a Part 360-16 Registration Facility, a formal request will be made for approval by OER with an associated plan compliant with 6NYCRR Part 360-16. This request and plan will include the location, volume and a description of the material to be recycled, including verification that the material is not impacted by site uses and that the material complies with receipt requirements for recycling under 6NYCRR Part 360. This material will be appropriately handled on-Site to prevent mixing with impacted material.

1.7 Materials Reuse On-Site

Soil and fill that is derived from the property that meets the Soil Cleanup Objectives (SCOs) established in this plan may be reused on-Site. The SCOs for on-Site reuse are listed in Section 4.2 of this cleanup plan. 'Reuse on-Site' means material that is excavated during the remedy or development, does not leave the property, and is relocated within the same property and on land with comparable levels of contaminants in soil/fill material, compliant with applicable laws and regulations, and addressed pursuant to the NYC VCP agreement subject to Engineering and Institutional Controls. The PE/QEP will ensure that reused materials are segregated from other materials to be exported from the Site and that procedures defined for material reuse in this remedial plan are followed. The expected location for placement of reused material is shown in Section 4.2.

Organic matter (wood, roots, stumps, etc.) or other waste derived from clearing and grubbing of the Site will not be buried on-Site. Soil or fill excavated from the site for grading or other purposes will not be reused within a cover soil layer or within landscaping berms.

1.8 Demarcation

After completion of hotspot removal and any other invasive remedial activities, and prior to backfilling, the top of the residual soil/fill will be defined by one of three methods: (1) placement of a demarcation layer. The demarcation layer will consist of geosynthetic fencing or equivalent

material to be placed on the surface of residual soil/fill to provide an observable reference layer. A description or map of the approximate depth of the demarcation layer will be provided in the SMP; or (2) a land survey of the top elevation of residual soil/fill before the placement of cover soils, pavement and associated sub-soils, or other materials or structures or, (3) all materials beneath the approved cover will be considered impacted and subject to site management after the remedy is complete. Demarcation may be established by one or any combination of these three methods. As appropriate, a map showing the method of demarcation for the Site and all associated documentation will be presented in the RAR.

This demarcation will constitute the top of the site management horizon. Materials within this horizon require adherence to special conditions during future invasive activities as defined in the Site Management Plan.

1.9 Import of Backfill Soil From Off-Site Sources

This Section presents the requirements for imported fill materials to be used below the cover layer and within the clean soil cover layer. All imported soils will meet OER-approved backfill and cover soil quality objectives for this Site. The backfill and cover soil quality objectives are listed in Section 4.2. Imported soils will not exceed groundwater protection standards established in Part 375. Imported soils for Track 1 remedial action projects will not exceed Track 1 SCO's.

A process will be established to evaluate sources of backfill and cover soil to be imported to the Site, and will include an examination of source location, current and historical use(s), and any applicable documentation. Material from industrial sites, spill sites, environmental remediation sites or other potentially contaminated sites will not be imported to the Site.

The following potential sources may be used pending attainment of backfill and cover soil quality objectives:

- Clean soil from construction projects at non-industrial sites in compliance with applicable laws and regulations;
- Clean soil from roadway or other transportation-related projects in compliance with applicable laws and regulations;
- Clean recycled concrete aggregate (RCA) from facilities permitted or registered by the regulations of NYS DEC.

- All materials received for import to the Site will be approved by a PE/QEP and will be in compliance with provisions in this remedial plan. The final remedial report will report the source of the fill, evidence that an inspection was performed on the source, chemical sampling results, frequency of testing, and a Site map indicating the locations where backfill or soil cover was placed.
- All material will be subject to source screening and chemical testing.
- Inspection of imported fill material will include visual, olfactory and PID screening for evidence of contamination. Materials imported to the Site will be subject to inspection, as follows:
- Trucks with imported fill material will be in compliance with applicable laws and regulations and will enter the Site at designated locations;
- The PE/QEP is responsible to ensure that every truck load of imported material is inspected for evidence of contamination; and
- Fill material will be free of solid waste including pavement materials, debris, stumps, roots, and other organic matter, as well as ashes, oil, perishables or foreign matter.

Composite samples of imported material will be taken at a minimum frequency of one sample for every 500 cubic yards of material. Once it is determined that the fill material meets imported backfill or cover soil chemical requirements and is non-hazardous, and lacks petroleum contamination, the material will be loaded onto trucks for delivery to the Site.
Recycled concrete aggregate (RCA) will be imported from facilities permitted or registered by NYSDEC. Facilities will be identified in the final remedial report. A PE/QEP is responsible to ensure that the facility is compliant with 6NYCRR Part 360 registration and permitting requirements for the period of acquisition of RCA. RCA imported from compliant facilities will not require additional testing, unless required by NYSDEC under its terms for operation of the facility. RCA imported to the Site must be derived from recognizable and uncontaminated concrete. RCA material is not acceptable for, and will not be used as cover material.

1.10 Fluids Management

All liquids to be removed from the Site, including dewatering fluids, will be handled, transported and disposed in accordance with applicable laws and regulations. Liquids discharged into the

New York City sewer system will receive prior approval by New York City Department of Environmental Protection (NYC DEP). The NYC DEP regulates discharges to the New York City sewers under Title 15, Rules of the City of New York Chapter 19. Discharge to the New York City sewer system will require an authorization and sampling data demonstrating that the groundwater meets the City's discharge criteria. The dewatering fluid will be pretreated as necessary to meet the NYC DEP discharge criteria. If discharge to the City sewer system is not appropriate, the dewatering fluids will be managed by transportation and disposal at an off-Site treatment facility.

Discharge of water generated during remedial construction to surface waters (i.e. a stream or river) is prohibited without a SPDES permit issued by New York State Department of Environmental Conservation.

1.11 Stormwater Pollution Prevention

Applicable laws and regulations pertaining to stormwater pollution prevention will be addressed during the remedial program. Erosion and sediment control measures identified in this remedial plan (silt fences and barriers, and hay bale checks) will be installed around the entire perimeter of the remedial construction area and inspected once a week and after every storm event to ensure that they are operating appropriately. Discharge locations will be inspected to determine whether erosion control measures are effective in preventing significant impacts to receptors. Results of inspections will be recorded in a logbook and maintained at the Site and available for inspection by OER. All necessary repairs shall be made immediately. Accumulated sediments will be removed as required to keep the barrier and hay bale check functional. Undercutting or erosion of the silt fence toe anchor will be repaired immediately with appropriate backfill materials. Manufacturer's recommendations will be followed for replacing silt fencing damaged due to weathering.

1.12 Contingency Plan for Unknown Contamination Sources

This contingency plan is developed for the remedial construction to address the discovery of unknown structures or contaminated media during excavation. Identification of unknown contamination source areas during invasive Site work will be promptly communicated to OER's Project Manager. Petroleum spills will be reported to the NYS DEC Spill Hotline. These findings

will be included in the daily report. If previously unidentified contaminant sources are found during on-Site remedial excavation or development-related excavation, sampling will be performed on contaminated source material and surrounding soils and reported to OER. Chemical analytical testing will be performed for TAL metals, TCL volatiles and semi-volatiles, TCL pesticides and PCBs, as appropriate.

1.13 Odor, Dust, and Nuisance Control

Odor Control

All necessary means will be employed to prevent on- and off-Site odor nuisances. At a minimum, procedures will include: (a) limiting the area of open excavations; (b) shrouding open excavations with tarps and other covers; and (c) use of foams to cover exposed odorous soils. If odors develop and cannot otherwise be controlled, additional means to eliminate odor nuisances will include: (d) direct load-out of soils to trucks for off-Site disposal; and (e) use of chemical odorants in spray or misting systems.

This odor control plan is capable of controlling emissions of nuisance odors. If nuisance odors are identified, work will be halted and the source of odors will be identified and corrected. Work will not resume until all nuisance odors have been abated. OER will be notified of all odor complaint events. Implementation of all odor controls, including halt of work, will be the responsibility of the PE/QEP's certifying this remedial plan.

Dust Control

Dust management during invasive on-Site work will include, at a minimum:

- Use of a dedicated water spray methodology for roads, excavation areas and stockpiles.
- Use of properly anchored tarps to cover stockpiles.
- Exercise extra care during dry and high-wind periods.
- Use of gravel or recycled concrete aggregate on egress and other roadways to provide a clean and dust-free road surface.

This dust control plan is capable of controlling emissions of dust. If nuisance dust emissions are identified, work will be halted and the source of dusts will be identified and corrected. Work will not resume until all nuisance dust emissions have been abated. OER will be notified of all

dust complaint events. Implementation of all dust controls, including halt of work, will be the responsibility of the PE/QEP's responsible for certifying this remedial plan.

Other Nuisances

Noise control will be exercised during the remedial program. All remedial work will conform, at a minimum, to NYC noise control standards.

Rodent control will be provided during Site clearing and grubbing and during the remedial program, as necessary, to prevent nuisances.

APPENDIX 5

CONSTRUCTION HEALTH AND SAFETY PLAN

CONSTRUCTION HEALTH AND SAFETY PLAN

Table of Contents

526 Union Avenue, Brooklyn, New York

Page

STATEMENT OF COMMITMENT SC-1

1.0 INTRODUCTION AND SITE ENTRY REQUIREMENTS 1

1.1 Training Requirements 1

1.2 Medical Monitoring Requirements 1

1.3 Fit-Testing Requirements 2

1.4 Site Safety Plan Acceptance, Acknowledgment and Amendments 2

1.5 Daily Safety Meetings 2

1.6 Key Personnel - Roles and Responsibilities 3

2.0 SITE BACKGROUND AND SCOPE OF WORK 5

3.0 HAZARD ASSESSMENT 6

3.1 Activity-Specific Hazards and Standard Operating Procedures 6

3.1.1 Operation of Heavy Equipment 6

3.1.2 Excavation/earthwork 6

3.1.3 Work in Extreme Temperatures 7

3.1.4 Dust Control and Monitoring 7

3.1.5 Dust Control and Monitoring During Earthwork 7

3.1.6 Drilling and Probing Operations 8

3.2 Chemical Hazards 8

3.2.1 Respirable Dust 8

3.2.2 Organic Vapors 9

3.3 General Site Hazards 9

4.0 PERSONAL PROTECTIVE EQUIPMENT 11

4.1 Level D 11

4.2 Level C 11

4.3 Level B 12

4.4 Activity-Specific Levels of Personal Protection 13

5.0 AIR MONITORING AND ACTION LEVELS 14

5.1 Community Air Monitoring Requirements 14

5.2 Perimeter Air Monitoring 16

5.3 Activity-Specific Air Monitoring 17

Table of Contents (Continued)

6.0 SITE CONTROL 18
6.1 Work Zones 18
6.2 General Field Safety and Standard Operating Procedures 18
6.3 Decontamination Procedure 18
7.0 CONFINED SPACE 22
8.0 CONTINGENCY PLAN/EMERGENCY RESPONSE PLAN 24
8.1 Emergency Equipment On-Site 24
8.2 Emergency Telephone Numbers 24
8.3 Personnel Responsibilities During an Emergency 25
8.4 Medical Emergencies 26
8.5 Fire or Explosion 26
8.6 Evacuation Routes 26
8.7 Spill Control Procedures 27
8.8 Vapor Release Plan 27

FIGURES

No.	Description
1	Vicintiy Map
2	Route to Hospital (Appendix F)

APPENDICES

APPENDIX A DRILLING PROTOCOLS
APPENDIX B HEAT/COLD STRESS PROTOCOLS
APPENDIX C CHEMICAL HAZARDS
APPENDIX D DAILY AIR MONITORING RECORD FORM
APPENDIX E CONFINED SPACE ENTRY CHECKLIST/PERMIT
APPENDIX F EMERGENCY TELEPHONE NUMBERS
HOSPITAL INFORMATION AND MAP
FIELD ACCIDENT REPORT
APPENDIX G SITE SAFETY PLAN AMENDMENTS
APPENDIX H SITE SAFETY ACKNOWLEDGMENT FORM

STATEMENT OF COMMITMENT

This Construction Health and Safety Plan (CHASP) has been prepared by Creative Environment Solutions, Inc. (CES) to ensure that workers are not exposed to risks during the planned construction activities to be performed at the 526 Union Avenue, Brooklyn, (herein referred to as "Site"). CES's policy is to minimize the possibility of work-related exposure through awareness and qualified supervision, health and safety training, medical monitoring, use of appropriate personal protective equipment, and the following activity specific safety protocols contained in this CHASP. CES has established a guidance program to implement this policy in a manner that protects personnel to the maximum reasonable extent.

This CHASP, which applies to persons present at the Site actually or potentially exposed to safety or health hazards, describes emergency response procedures for actual and potential physical and chemical hazards. This CHASP is also intended to inform and guide personnel entering the work area, which will be deemed an exclusion zone. Persons are to acknowledge that they understand the potential hazards and the contents of this Health and Safety policy by signing off on receipt of their individual copy of the document.

It should be noted that this document has been prepared specifically to address potential worker exposure to the contaminants identified at the proposed construction Site during the earthwork activities only. It is not intended to address the standard health and safety concerns related to general construction practices. Contractors and suppliers are responsible for ensuring the health and safety of their own employees.

1.0 INTRODUCTION AND SITE ENTRY REQUIREMENTS

This document describes the health and safety guidelines developed by CES. CES has prepared this CHASP at the request of Tryad Group (Tryad) for the proposed Site re-development to be performed at the 526 Union Avenye, Brooklyn, NY Site to protect on-Site personnel, visitors, and the public from physical harm and exposure to hazardous materials or wastes. In accordance with the Occupational Safety and Health Administration (OSHA) 29 CFR Part 1910.120 Hazardous Waste Operations and Emergency Response Final rule, this CHASP, including the attachments, addresses safety and health hazards relating to Site operations associated with soil excavation and disturbance activities and is based on the best information available. The CHASP may be revised by CES at the request of Tryad and/or a regulatory agency upon receipt of new information regarding Site conditions. Changes will be documented by written amendments signed by CES's project superintendent, Site safety officer and/or the CES health and safety consultant.

1.1 Training Requirements

Health and safety oversight personnel entering an area deemed an exclusion zone or decontamination zone must meet the training requirements for hazardous waste Site operations and emergency response operations in accordance with OSHA 29 CFR 1910.120(e). Workers conducting work associated with the proposed construction are not anticipated to require this training.

If Site conditions warrant hazardous waste Site operations training, each subcontractor and supplier working on the job must provide the Site safety officer with training documentation for its personnel. This documentation will be reviewed by the Site safety officer to ensure compliance with Site-specific health and safety rules. The Site safety officer may require modifications to the subcontractor or suppliers safety training documentation if it does not conform to Site-specific requirements.

1.2 Medical Monitoring Requirements

Since Site contaminants are minimal and all work is expected to be performed using Level D protection, no medical monitoring is expected. However, if work requires a greater level of protection, CES personnel and visitors entering the exclusion zone or decontamination zone must have completed appropriate medical monitoring required under OSHA 29 CFR 1910.120(f). Medical monitoring enables a physician to monitor

each employee's health, physical condition, and his fitness to wear respiratory protective equipment and carry out on-Site tasks.

If required, subcontractors and suppliers working on the project must provide, evidence of compliance with medical monitoring requirements to the Site safety officer upon request.

1.3 Fit-Testing Requirements

Personnel and visitors entering the exclusion zone or decontamination zone using a negative pressure air purifying respirator (APR) must have successfully passed a qualitative respirator fit test in accordance with OSHA 29 CFR 1910.134 or the American National Standards Institute (ANSI).

Fit testing documentation is the responsibility of each subcontractor. Documentation of CES's personnel fit-testing is maintained on file. Respirators or APRs are not expected to be needed on this project.

1.4 Site Safety Plan Acceptance, Acknowledgment and Amendments

The project superintendent and the Site safety officer are responsible for informing personnel (CES employees and/or owner or owners representatives) entering the work area of the contents of this plan and ensuring that each person signs the safety plan acknowledging the on-Site hazards and procedures required to minimize exposure to adverse effects of these hazards. A copy of the Acknowledgement Form is included in Appendix H.

Site conditions may warrant an amendment to the CHASP. Amendments to the CHASP are acknowledged by completing forms included in Appendix G.

1.5 Daily Safety Meetings

Each day, before work begins, the Site safety officer will hold safety (tailgate or tool box) meetings to ensure that on-Site personnel understand the Site conditions and operating procedures and to address safety questions and concerns. Meeting minutes and attendance will be recorded. Personnel eligible to enter the exclusion and decontamination zones must attend the meetings. Project staff will discuss and remedy health and safety issues at these meetings.

1.6 Key Personnel - Roles and Responsibilities

The following CES key personnel are planned for this project:

- CES Project Manager Mr. Michael Rattacasa
- CES Site Safety Officer Mr. Craig Puerta

The CES project manager is responsible for overall project administration and, with guidance from the CES Site safety officer, for supervising the implementation of this CHASP. The Site safety officer will conduct daily (tail gate or tool box) safety meetings at the project Site and oversee daily safety issues. Each subcontractor and supplier (defined as an OSHA employer) is also responsible for the health and safety of its employees. If there is any dispute about health and safety or project activities, on-Site personnel will attempt to resolve the issue. If the issue cannot be resolved at the Site, then the project manager will be consulted.

The Site safety officer is also responsible for coordinating and enforcing health and safety activities on-Site. The Site safety officer must meet the emergency response and hazardous materials training requirements of OSHA 29 CFR Part 1910.120; must have completed OSHA supervisor training, 29 CFR 1910.120 (e) 4; and must have appropriate experience to the related Site work. The Site safety officer is authorized to suspend the Site work based on safety concerns, and is responsible for the following:

1. Educating personnel about information in this CHASP and other safety requirements to be observed during Site operations, including, but not limited to, decontamination procedures, designation of work zones and levels of protection, air monitoring, fit testing, and emergency procedures dealing with fire and first aid.

2. Coordinating Site safety decisions with the project manager.

3. Designating exclusion, decontamination and support zones on a daily basis.

4. Monitoring the condition and status of known on-Site hazards and maintaining and implementing the air quality monitoring program specified in this CHASP.

5. Maintaining the work zone entry/exit log and Site entry/exit log.

6. Maintaining records of safety problems, corrective measures and documentation of chemical exposures or physical injuries (the Site safety officer will document these conditions in a bound notebook and maintain a copy of the notebook on-Site).

The person who observes safety concerns and potential hazards that have not been addressed in the daily safety meetings should immediately report their observations/concerns to the Site safety officer or appropriate key personnel.

2.0 SITE BACKGROUND AND SCOPE OF WORK

The Site is located in the Brooklyn, New York and is identified as Block 2741, Lot 3 on the tax maps of New York City. Figure 1 is a Site location map. The Site is approximately 0.25 acres and is bordered to the north by Withers Street, to the east by the Brooklyn Queens Expressway; to the south by Jackson Street; and to the west by the Union Avenue. No buildings exist at the Subject Property and the Subject Property is currently vacant with no present usage.

Layout of the proposed site development is presented in Figure Two. The current zoning designation is M1-2/R6A.

3.0 HAZARD ASSESSMENT

This section identifies the hazards associated with the proposed scope of work, general Site operations which may also be conducted at Site, and the standard operating procedures (SOPs) that should be implemented to reduce the hazards; identifies general physical hazards that can be expected at most Sites; and presents a summary of documented or potential chemical hazards at the Site. Every effort must be made to reduce or eliminate these hazards. Those that cannot be eliminated must be guarded against using engineering controls and/or personal protective equipment.

3.1 Activity-Specific Hazards and Standard Operating Procedures

3.1.1 Operation of Heavy Equipment

The use of heavy equipment will be implemented for this project; therefore, Occupational Safety and Health Administration (OSHA) guidelines will be followed for operating heavy equipment as outlined in 29 CFR 1926.602.

3.1.2 Excavation/earthwork

Soil excavation to a depth of approximately 8-10 feet below existing grade will be required as part of this project. Excavation activities will follow the OSHA 29 CFR 1926.651 (February 20, 1990) construction industry standards relating to excavation work. These standards include shoring and cutback requirements, equipment specifications, entry requirements, etc. To avoid exposure to Site-specific contaminants and to ensure acceptable atmospheric conditions, the following additional requirements apply when excavation work is performed:

- Air quality will be tested before employees enter excavations over four feet deep if a hazardous atmosphere exists or is suspected to exist. If the Site safety officer determines that excavations are, by OSHA's definition, "confined space," the confined space entry policy (Section 7.0) will be followed.

- Open excavations will be backfilled as soon as practicable. While excavations remain open, appropriate warnings will be posted and barricades will be erected to protect pedestrian and worker

safety. Where possible, excavation side walls will be cut at a gradual slope to maximize egress and access. Workers will not enter excavations unless absolutely required.

- To ensure atmospheric quality, tests shall be conducted as often as necessary as determined by the Site safety officer. This includes tests for flammable gas and oxygen deficiency.

- When the Site safety officer identifies hazardous atmospheres, emergency rescue equipment and PPE must be on the work Site (Level C PPE) and readily accessible to employees (29 CFR 1926.651(g)(2)(I)).

- Daily Site safety inspections will be conducted by the Site safety officer.

3.1.3 Work in Extreme Temperatures

Work under extremely hot or cold weather conditions requires special protocols to minimize the chance that employees will be affected by heat or cold stress. CES follows the heat and cold stress safety protocols described in Appendix B.

3.1.4 Dust Control and Monitoring

Dust generated during work activities may contain contaminants associated with the Site characteristics. The Site safety officer will be responsible for monitoring dust levels and requiring action when necessary as described in the following sections.

3.1.5 Dust Control and Monitoring During Earthwork

Dust generated during excavation activities or other earthwork may contain contaminants identified in soils at the Site. Dust will be controlled by wetting the working surface with water. Calcium chloride may be used if the problem cannot be controlled with water. Air monitoring and dust control techniques are specified in a Site specific Dust Control Plan (if applicable). Site workers will not be required to wear APR's unless dust concentrations are consistently over 150 ig/m3 over Site-specific background in the breathing

zone as measured by a dust monitor unless the Site safety officer directs workers to wear APRs. The Site safety officer will use visible dust as an indicator to implement the dust control plan. The primary sources of dust will be equipment, vehicular traffic, and construction activities.

3.1.6 Drilling and Probing Operations

Additional drilling operations at the Site are not anticipated. However, if necessary CES will follow the drill rig/Geoprobe™ operation safety protocols described in Appendix A. In addition, CES and/or their subcontractor(s) will follow Geoprobe™ operation and sampling procedures Standard Operating Procedures.

3.2 Chemical Hazards

Soil sample results reviewed at the Site indicated historic fill material at the subject Site.

As explained above, the compounds detected are not associated with a particular on-Site source of contamination, but rather historic fill material. The primary routes of exposure to suspected and identified contaminants in soil are inhalation, ingestion and absorption.

Appendix C includes information sheets for the known and suspected chemicals that may be encountered at the Site.

3.2.1 Respirable Dust

Dust may be generated from vehicular traffic and/or other construction activities. If visible observation detects elevated levels of dust, a program of wetting will be employed by the Site safety officer. If elevated dust levels persist, the Site safety office will employ dust monitoring using a particulate monitor (Miniram or equivalent). If monitoring detects concentrations greater than 150 ig/m3 over daily background, the Site safety officer will take corrective actions as defined herein, including the use of water for dust suppression and if this is not effective, requiring workers to wear APRs with efficiency particulate air (HEPA) cartridges.

Absorption pathways for dust and direct contact with soils will be mitigated with the implementation of latex gloves, hand washing and decontamination exercises when necessary.

3.2.2 Organic Vapors

Limited VOCs were detected in soil samples collected from previous investigations, the potential for historical fill that comprises the Site to contain isolated areas of VOCs impact exists. Therefore, excavation activities may cause the release of organic vapors to the atmosphere. The Site safety officer will periodically monitor organic vapors with a Photoionization Detector (PID) during excavation activities to determine whether organic vapor concentrations exceed action levels shown below.

PID Response	Action
Sustained readings of 5 ppm or greater	Shut down equipment and allow area to vent. Resume when readings return to background
Sustained readings of 5 ppm or greater that do not subside after venting	Implement Vapor Release Plan (Section 8.6). Re-evaluate respiratory protection as upgrade may be required.

3.3 General Site Hazards

Applicable OSHA 29 CFR 1910.120(m) standards for illumination shall apply. Work is to be conducted during daylight hours whenever possible.

Electrical power must be provided through a ground fault circuit interrupter. Equipment that will enter an excavation must be suitable and approved (i.e. intrinsically safe) for use in potentially explosive environments. Applicable OSHA 29 CFR 1926 Subpart K standards for use of electricity shall apply.

Work where there is a fall hazard will be performed using appropriate ladders and/or protection (e.g. body harness and lifeline). All work should be conducted at the ground surface or in trench excavations.

In accordance with 29 CFR 1910.151(c), workers involved in operations where there is the risk of eye injury, (chemical splash, etc.), must have ready access to an approved eye wash unit. Protective eye wear shall be donned in Level D, when directed by the Site safety officer.

Operations where there is a potential for fire will be conducted in a manner that minimizes risk. Non sparking tools and fire extinguishers shall be used or available as directed by the Site safety officer when work is in potentially explosive atmospheres. Ignition sources shall be removed from work areas. Explosion proof instruments and/or bonding and grounding will be used to prevent fire or explosion when

the Site safety officer directs their use.

Overhead and underground utilities shall be identified and/or inspected and appropriate safety precautions taken before conducting operations where there is potential for contact or interference.

4.0 PERSONAL PROTECTIVE EQUIPMENT

Personal protective equipment (PPE) shall be selected in accordance with the Site air monitoring program, OSHA 29 CFR 1910.120(c), (g), and 1910.132. Protective equipment shall be NIOSH approved and respiratory protection shall conform to OSHA 29 CFR Part 1910.133 and 1910.134 specifications; head protection shall conform to 1910.135; eye and face protection shall conform to 1910.133; and foot protection shall conform to 1910.136. The only true difference among the levels of protection from D thru B is the addition of the type of respiratory protection. **It is anticipated that work will be performed in Level D PPE.**

4.1 Level D

Level D PPE shall be donned when the atmosphere contains no known hazards and work functions preclude splashes, immersion, or the potential for inhalation of, or contact with, hazardous concentrations of harmful chemicals. Level D PPE consists of:

1. standard work uniform, coveralls, or tyvek, as needed;
2. steel toe and steel shank work boots;
3. hard hat;
4. gloves, as needed;
5. safety glasses;
6. hearing protection;
7. equipment replacements are available as needed.

4.2 Level C

Level C PPE shall be donned when the concentrations of measured total organic vapors in the breathing zone exceed background concentrations (using a portable OVA, or equivalent), but are less than 5 ppm. The specifications on the APR filters used must be appropriate for contaminants identified or expected to be encountered. Level C PPE shall be donned when the identified contaminants have adequate warning properties and criteria for using APR have been met. Level C PPE consists of:

1. chemical resistant or coated tyvek coveralls;

2. steel-toe and steel-shank workboots;
3. chemical resistant overboots or disposable boot covers;
4. disposable inner gloves (surgical gloves);
5. disposable outer gloves;
6. full face APR fitted with organic vapor/dust and mist filters or filters appropriate for the identified or expected contaminants;
7. hard hat;
8. splash shield, as needed; and,
9. ankles/wrists taped with duct tape.

The Site safety officer will verify if Level C is appropriate by checking organic vapor concentrations using compound and/or class-specific detector tubes.

4.3 Level B

Level B PPE shall be donned when the contaminants have not been identified and/or the concentrations of unknown measured total organic vapors in the breathing zone exceed 5 ppm (using a portable OVA, or equivalent). Level B PPE shall be donned if the IDLH of a known contaminant is exceeded. If a contaminant is identified or is expected to be encountered for which NIOSH and/or OSHA recommend the use of a positive pressure self-contained breathing apparatus (SCBA) when that contaminant is present, Level B PPE shall be donned even though the total organic vapors in the breathing zone may not exceed 5 ppm. Level B shall be donned for confined space entry, and when the atmosphere is oxygen deficient (oxygen less than 19.5%) or potentially oxygen deficient. If Level B PPE is required for a task, at least three people shall be donned in Level B at any one time during that task. PPE shall only be donned at the direction of the Site safety officer. Level B PPE consists of:

1. supplied air SCBA or air line system with five minute egress system;
2. chemical resistant coveralls;
3. steel-toe and steel-shank workboots;
4. chemical resistant overboots or disposable boot covers;
5. disposable inner gloves;

6. disposable outer gloves;
7. hard hat; and,
8. ankles/wrists taped.

The exact PPE ensemble is decided on a Site-by-Site basis by the CES's Health and Safety Officer with the intent to provide the most protective and efficient worker PPE.

4.4 Activity-Specific Levels of Personal Protection

The required level of PPE is activity-specific and is based on air monitoring results (Section 4.0) and properties of identified or expected contaminants. **It is expected that Site work will be performed in Level D.** If air monitoring results indicate the necessity to upgrade the level of protection engineering controls (i.e. Facing equipment away from the wind and placing Site personnel upwind of excavations, active venting, etc.) will be implemented before requiring the use of respiratory protection.

5.0 AIR MONITORING AND ACTION LEVELS

29 CFR 1910.120(h) specifies that monitoring shall be performed where there may be a question of employee exposure to hazardous concentrations of hazardous substances in order to assure proper selection of engineering controls, work practices and personal protective equipment so that employees are not exposed to levels which exceed permissible exposure limits, or published exposure levels if there are no permissible exposure limits, for hazardous substances.

5.1 Community Air Monitoring Requirements

During excavation work, fugitive respirable dust will be monitored using a MiniRam Model PDM-3 aerosol monitor and air will be monitored for VOCs with a portable Foxboro OVA, Photovac MicroTip, or the equivalent. If necessary, carbon dioxide and carbon monoxide will be monitored with a three-position analyzer and Lower Explosive Limit (LEL) and oxygen will be monitored with a Combustible Gas Indicator (CGI). Air will be monitored when any of the following conditions apply:

1. initial Site entry;
2. during any work where a potential IDLH condition or flammable atmosphere could develop;
3. excavation work begins on another portion of the Site;
4. contaminants, other than those previously identified, have been discovered;
5. each time a different task or activity is initiated;
6. during trenching and/or excavation work; or
7. before and during entry into confined spaces.

The designated Site safety officer will record air monitoring data. CES's Site safety officer or delegate must ensure that air monitoring instruments are calibrated and maintained in accordance with manufacturer's specifications. Instruments will be zeroed daily and checked for accuracy. A daily log will be kept. Monitoring results will be recorded on the sheets contained in Appendix D.

Below are examples of Site specific guidelines and actions which are taken based on routine air monitoring:

Oxygen readings between 19.5% and 23.5%: continue.
Oxygen readings <19.5%: SCBA required, CGI not reliable.
Oxygen readings >23.5%: exit.

CGI readings of <10% LEL: continue.
CGI readings of 10 to 20% LEL: proceed with caution.
CGI readings >20% LEL: exit.

OVA/PID readings for VOCs sustained at background and 5 ppm over the Site specific background in breathing zone: continue.
OVA/PID readings for VOCs sustained between 5 ppm and 25 ppm over the Site specific background in breathing zone: Level C PPE. (See Note)
OVA/PID readings for VOCs sustained >25 ppm over the Site specific background in breathing zone: Level B PPE. (See Note)

Note: To ensure that readings are not generated by methane, screen vapors with a PID[1] . If the PID reading is less than 5 ppm continue work (assume vapors are methane). If PID readings are over 5 ppm allow the work zone to vent. If PID and OVA readings continue to persist over 5 ppm, request CES to screen the area with compound specific detector tubes for benzene.

If this compound is not present then level C can be worn.
OVA readings >5 ppm in breathing zone: Level B PPE.
Total Respirable Dust at background in breathing zone: continue.

Some older model PIDs may not be safe for operation in combustible atmospheres. The PIDs used on this project must be "Class 1, Division 1 explosion proof", similar to a Photovac MicroTip.

Total Respirable Dust at 150 mg/m3 in breathing zone:
Level C PPE - HEPA filters. Site safety officer can call for upgrades based on visual dust without metering total respirable dust.

H_2S readings of less than 5 ppm: continue

H_2S readings of 5-10 ppm: proceed with caution

H_2S readings of greater than 10 ppm: exit - stop work

CO readings of less than 25 ppm: continue

CO readings of 25-35 ppm: proceed with caution

CO readings of greater than 35 ppm: exit - stop work

CO_2 readings of less than 2500 ppm: continue

CO_2 readings of 2500-5000 ppm: proceed with caution

CO_2 readings of greater than 5000: exit - stop work

Prior to Site work, the CES Site safety officer will compile a list of likely Site contaminants, select appropriate air monitoring instrumentation and define action levels.

5.2 Perimeter Air Monitoring

No perimeter air monitoring is proposed at this Site.

5.3 Activity-Specific Air Monitoring

The monitoring of VOC concentrations present in the employees breathing zone will be periodically monitored during drilling/excavation activities using a Foxboro OVA, Photovac MicroTip, or the equivalent. Air monitoring results will be recorded in the field log book. No trenches/excavations will be entered until they have been checked for combustible gases, percent oxygen VOCs and carbon dioxide. An MSA Model 361 combustible gas indicator, or the equivalent will be used to monitor trenches/excavations for the above listed compounds. If additional monitoring is required, the protocols will be developed and appended to this plan.

6.0 SITE CONTROL

6.1 Work Zones

The primary purpose of Site controls is to establish the perimeter of a hazardous area, to reduce the migration of contaminants into clean areas, and to prevent access or exposure to hazardous materials by unauthorized persons. When operations are to take place involving hazardous materials, the Site safety officer will establish an exclusion zone, a decontamination zone, and a support zone. These zones "float" (move around the Site) depending on the tasks being performed on any given day. The Site safety officer will outline these locations before work begins and when zones change. The Site safety officer records this information in the Site log book. **It is expected that for construction activities identification of a decontamination zone and support zone will not be necessary.**

Tasks requiring OSHA 40-hour Hazardous Waste Operations and Emergency Response Operations training are carried out in the exclusion zone. The exclusion zone is defined by the Site safety officer but will typically be a 50-foot area around work activities. Gross decontamination (as determined by the Site Health and Safety Officer) is conducted in the exclusion zone; if needed, all other decontamination is performed in the decontamination zone or trailer.

Protective equipment is removed in the decontamination zone, if established. Disposable protective equipment is stored in receptacles staged in the decontamination zone, and non-disposable equipment is decontaminated. All personnel and equipment exit the exclusion zone through the decontamination zone. If a decontamination trailer is provided the first aid equipment, an eye wash unit, and drinking water are kept in the decontamination trailer.

The support zone is used for vehicle parking, daily safety meetings, and supply storage. Eating, drinking, and smoking are permitted only in the support zone. When a decontamination trailer is not provided, the eye wash unit, first aid equipment, and drinking water are kept at a central location designated by the Site safety officer.

6.2 General Field Safety and Standard Operating Procedures

CES's policy is to control hazards at all Site areas by limiting entrance to exclusion zones to essential personnel and by implementing the following rule:

1. Non-essential (as judged by the Site safety officer) personnel and unauthorized persons will not enter the exclusion or decontamination zone.

2. Before entering the exclusion or decontamination zones, all personnel must be familiar with emergency response procedures (Section 8.0), Site safety locations, first aid and communication equipment, and the location of the map to the hospital and the list of emergency telephone numbers.

3. The buddy system will be used at all times by field personnel in the exclusion zone; no one is to perform work within the exclusion zone alone. When in Level D or C, visual contact or radio contact shall be maintained at all times.

4. Contact with contaminated and potentially contaminated surfaces should be avoided. Walk around (not through) puddles and discolored surfaces. Do not kneel on the ground or place equipment on the ground. Protect equipment from contamination.

5. Eating, drinking, or smoking is permitted only in designated areas in the support zone.

6. Each worker must be supplied with and maintain his/her own personal protective equipment.

6.3 Decontamination Procedures

If a decontamination zone is established, all equipment and PPE exiting the decontamination zone must be decontaminated or properly discarded upon exit. The decontamination zones may change depending on the nature of the Site work. Plastic bags containing personal protective clothing and equipment will be placed in designated receptacles.

All boots and other potentially contaminated garments that have come in contact with hazardous materials will be cleaned in wash tubs with detergent/water solution and rinsed with water and must remain on Site. The wash water, rinse water, and residues will be collected and properly stored until sampling results are

received and the final method of disposal can be determined. Disposable PPE, including spent respirator cartridges and canisters, will be properly bagged and disposed of. All contaminated boots, clothing, and equipment (e.g. leather boots, equipment carrying straps) that cannot be decontaminated will be disposed of with the disposable garments or left on Site in the decontamination trailer.

The ***minimum*** measures for Level B doffing and decontamination are:

1. deposit equipment on plastic drop cloths;
2. scrub outer boots and gloves with a water and detergent solution and rinse;
3. remove outer boots and outer gloves. Discard disposable outer garments in receptacle provided;
4. remove SCBA and face piece and place on rack provided;
5. remove tyvek/outer garment and place in receptacle provided;
6. remove inner gloves and deposit in receptacle provided; and,
7. shower/wash face and hands.

The ***minimum*** measures for Level C doffing and decontamination are:

1. deposit equipment on plastic drop cloths;
2. scrub outer boots and gloves (if worn) with a water and detergent solution and rinse;
3. remove outer boots and outer gloves. Discard disposable outer garments in receptacle provided;
4. remove tyvek/outer garment and place in receptacle provided;
5. remove first pair of inner gloves;
6. remove respirator (using "clean" inner gloves) and place on rack provided;
7. remove last pair of inner gloves and deposit in receptacle provided; and,
8. shower/wash face and hands.

The second to last item to be removed is the APR, and the last item to be removed is the last of several pairs of surgical gloves. Wearing several pairs of inner gloves permits layers to be removed as needed during various stages of the doffing procedure, and if the APR inadvertently becomes contaminated, inner gloves guard against bare hands contacting the APR.

Equipment that comes into contact with Site contaminants is decontaminated according to manufacturer specifications. Decontamination is done in the exclusion or decontamination zones. Rented equipment is photographed after decontamination.

7.0 CONFINED SPACE

OSHA published a Final Rule on permit-required confined spaces on January 14, 1993, for General Industry at 29 CFR 1910.146 et seq., with an implementation date of April 15, 1993. The rule specifically excludes agriculture, construction, or shipyard employment. Confined space entry and work within confined spaces is not anticipated to be performed under the proposed scope of work. However, if confined space work is conducted it will be performed in accordance with the applicable OSHA regulations. OSHA defines confined space as:

1. is large enough and so configured that an employee can bodily enter and perform assigned work;
2. has limited or restricted areas for entry or exit (for example, tanks, vessels, silos, storage bins, hoppers, vaults, and pits are spaces that may have limited entry); and
3. is not designed for continuous worker occupancy.

OSHA further requires that an "entry supervisor" (the Site designated safety officer) decide at the time of entry whether the space is permit-required or non-permit required space. The Site safety officer will monitor the space two hours prior to entry and continuously during work to ensure that the atmosphere is not hazardous. OSHA defines as hazardous atmosphere as:

1. Flammable gas, vapor, or mist in excess of 10 percent of its lower explosive limit (LEL);

2. Airborne combustible dust at a concentration that meets or exceeds its LEL;
   NOTE: This concentration may be approximated as a condition in which the dust obscures vision at a distance of 5 feet (1.52 m) or less.

3. Atmospheric oxygen concentration below 19.5 percent or above 23.5 percent;

4. Atmospheric concentration of any substance for which a dose or a permissible exposure limit is published in Subpart G, Occupational Health and Environmental Control, or in Subpart Z. Toxic

   and Hazardous Substances, of this part and which could result in employee exposure in

excess of its dose or permissible exposure limit;

5. Any other atmospheric condition that is immediately dangerous to life or health.

6. A space is non-permit required if none of the above defined hazardous conditions are present. OSHA requires that an attendant (e.g., an individual stationed outside one or more spaces who monitors the entrants and who performs air monitoring of the space(s)) be assigned to each space. The attendant is not allowed to perform any direct rescue related duties, but is there to communicate with the entrant and call for rescue procedures if required.

The following protocol applies when CES employees must enter a confined space:

- The Site safety officer evaluates the space and Site conditions to determine whether the space must be considered "confined".

- If so, the Site safety officer monitors the space for hazardous atmospheres prior to entry and fills out a pre-entry checklist (Appendix E) to determine whether an entry-permit is required.

- If there is no hazardous atmosphere, the space will be continuously monitored during the entry to assure that the atmosphere remains non-hazardous.

- If the space contains a hazardous atmosphere, an entry permit (Appendix E) will be prepared and the space will only be entered in accordance with 29 CFR 1910.146.

8.0 CONTINGENCY PLAN/EMERGENCY RESPONSE PLAN

Site personnel must be prepared in the event of an emergency. Emergencies can take many forms: illnesses, injuries, chemical exposure, fires, explosions, spills, leaks, releases of harmful contaminants, or sudden changes in the weather.

Emergency telephone numbers and a map to the hospital will be posted in the command post. Site personnel should be familiar with the emergency procedures, and the locations of Site safety, first aid, and communication equipment. These will be outlined in the Site specific CHASP.

8.1 Emergency Equipment On-Site

Private telephones:	Site personnel.
Two-way radios:	Site personnel where necessary.
Emergency Alarms:	On-Site vehicle horns*.
First aid kits:	On-Site, in vehicles or office.
Fire extinguisher:	On-Site, in office or on equipment.

* Horns: Air horns will be supplied to personnel at the discretion of the project superintendent or Site safety officer.

8.2 Emergency Telephone Numbers

General Emergencies	911
New York City Police	911
NYSDEC Spills Division	1-800-457-7362
NYSDEC Hazardous Waste Division	1-718-482-4994
NYCOER	1-212-788-8841
NYC Department of Health	1-212-788-4711
NYC Fire Department	911
NY One Call (Utility Markouts)	1-800-272-4480
National Response Center	1-800-424-8802
Poison Control	1-212-340-4494

Health and Safety Officer	1-917-952-8216
Alternate Health and Safety Officer	1-917-952-8216

A copy of this page shall be posted in the office and a copy is provided in Appendix F.

8.3 Personnel Responsibilities During an Emergency

The project manager is primarily responsible for responding to and correcting any emergency situations. However, in the absence of the project manager, the Site safety officer shall act as the project manager's on-Site designee and perform the following tasks:

1. Take appropriate measures to protect personnel including: withdrawal from the exclusion zone, evacuate and secure the Site, or upgrade/downgrade the level of protective clothing and respiratory protection;

2. Ensure that appropriate federal, state, and local agencies are informed and emergency response plans are coordinated. In the event of fire or explosion, the local fire department should be summoned immediately. If toxic materials are released to the air, the local authorities should be informed in order to assess the need for evacuation;

3. Ensure appropriate decontamination, treatment, or testing for exposed or injured personnel;

4. Determine the cause of incidents and make recommendations to prevent recurrence; and,

5. Ensure that all required reports have been prepared.

The following key personnel are planned for this

project:

CES Project Manager	Mr. Michael Rattacasa (201) 218-0926
CES Site Safety Officer	Mr. Craig Puerta (917) 952-8216

8.4 Medical Emergencies

A person who becomes ill or injured in the exclusion zone will be decontaminated to the maximum extent possible. If the injury or illness is minor, full decontamination will be completed and first aid administered prior to transport. First aid will be administered while waiting for an ambulance or paramedics. A Field Accident Report (Appendix F) must be filled out for any injury.

A person transporting an injured/exposed person to a clinic or hospital for treatment will take the directions to the hospital and information on the chemical(s) to which they may have been exposed (Appendix F).

8.5 Fire or Explosion

In the event of a fire or explosion, the local fire department will be summoned immediately. The Site safety officer or his designated alternate will advise the fire commander of the location, nature and identification of the hazardous materials on-Site. If it is safe to do so, Site personnel may:

1. use fire fighting equipment available on Site; or,
2. remove or isolate flammable or other hazardous materials that may contribute to the fire.

8.6 Evacuation Routes

Evacuation routes established by work area locations for each Site will be reviewed prior to commencing Site operations. As the work areas change, the evacuation routes will be altered accordingly, and the new route will be reviewed.

Under extreme emergency conditions, evacuation is to be immediate without regard for equipment. The evacuation signal will be a continuous blast of a vehicle horn, if possible, and/or by verbal/radio communication. When evacuating the Site, personnel will follow these instructions:

- Keep upwind of smoke, vapors, or spill location.

- Exit through the decontamination corridor if possible.

- If evacuation through the decontamination corridor is not possible, personnel should remove

contaminated clothing once they are in a safe location and leave it near the exclusion zone or in a safe place.

- The Site safety officer will conduct a head count to ensure that all personnel have been evacuated safely. The head count will be correlated to the Site and/or exclusion zone entry/exit log.

- If emergency Site evacuation is necessary, all personnel are to escape the emergency situation and decontaminate to the maximum extent practical.

8.7 Spill Control Procedures

Spills associated with Site activities may be attributed to project specific heavy equipment and include gasoline, diesel and hydraulic oil. In the event of a leak or a release, Site personnel will inform their supervisor immediately, locate the source of spillage and stop the flow if it can be done safely. A spill containment kit including absorbent pads, booms and/or granulated speedy dry absorbent material will be available to Site personnel to facilitate the immediate recovery of the spilled material. Daily inspections of Site equipment components including hydraulic lines, fuel tanks, etc. will be performed by their respective operators as a preventative measure for equipment leaks and to ensure equipment soundness. In the event of a spill, Site personnel will immediately notify the NYSDEC (1-800-457-7362), and a spill number will be generated.

8.8 Vapor Release Plan

If work zone organic vapor (excluding methane) exceeds 5 ppm, then a downwind reading will be made either 200 feet from the work zone or at the property line, whichever is closer. If readings at this location exceed 5 ppm over background, the work will be stopped.

If 5 ppm of VOCs are recorded over background on a PID at the property line, then an off-Site reading will be taken within 20 feet of the nearest residential or commercial property, whichever is closer. If efforts to mitigate the emission source are unsuccessful for 30 minutes, then the designated Site safety officer will:

- contact the local police;
- continue to monitor air every 30 minutes, 20 feet from the closest off-Site property. If two

successive readings are below 5 ppm (non-methane), off-Site air monitoring will be halted.

- All property line and off Site air monitoring locations and results associated with vapor releases will be recorded in the Site safety log book.

FIGURES

Google Maps 526 Union Ave

Imagery ©2015 Google, Map data ©2015 Google 50 ft

APPENDIX A DRILLING/GEOPROBE PROTOCOLS

SAFETY PROCEDURES DURING THE OPERATION OF DRILLING/PROBING MACHINES INCLUDE, BUT ARE NOT LIMITED TO THE FOLLOWING:

• All Site personnel should know the location of the rig emergency shut-off switch prior to beginning operations.

• The rig should be inspected prior to operation to ensure that it is in proper working condition and that all safety devices are functioning.

• Each rig should have a first-aid kit and fire extinguisher which should be inspected to ensure that they are adequate.

• All operators should wear, at a minimum, hard hats, steel-toe safety shoes or boots, gloves and safety glasses. Additional clothing and protective equipment may be required at Sites where hazardous conditions are likely. Clothing must be close fitting, without loose ends, straps, draw strings or belts or other unfastened parts that might catch on moving machinery.

• Work areas should be kept free of materials, debris and obstruction, and substances such as grease or oil that could cause a surface to become slick or otherwise hazardous.
• Prior to drilling, the Site must be checked to determine whether it can accommodate the rig and supplies and provide a safe working area.

• The drill rig mast (derrick) must be lowered prior to moving between drilling locations.

• The drill rig masts should not be raised if the rig will not be at least 20 feet away from overhead utilities.

• The location of underground utilities should be determined prior to erecting the rig.

• The drill rigs must be properly erected, leveled and stabilized prior to drilling.

• The operator must shut down the vehicle engine before leaving the vicinity of the machine.

• All personnel not directly involved in operating the rig or in sampling should remain clear of the drilling equipment when it is in operation.

• All unattended boreholes must be adequately covered or otherwise protected to prevent trip and fall hazards. All open boreholes should be covered, protected or backfilled as specified in local or state regulations.

• When climbing to or working on a derrick platform that is higher than 20 feet, a safety climbing device should be used.

• The user of wire line hoists, wire rope and hoisting hardware should be as stipulated by the American Iron and Steel Institute Wire Rope Users Manual.

• The rig should be operated in a manner which is consistent with the manufacturers' ratings of speed, force, torque, pressure, flow, etc. The rig and tools should be used for the purposes for which they were intended.

APPENDIX B HEAT/COLD STRESS PROTOCOLS

HEAT STRESS

Heat Stress (Hyperthermia)

Heat stress is the body's inability to regulate the core temperature. A worker's susceptibility to heat stress can vary according to his/her physical fitness, degree of acclimation to heat, humidity, age and diet.

1. Prior to Site activity, the field team leader may make arrangements for heat stress monitoring (i.e., monitoring heart rate, body temperature, and body water loss) during actual Site work if conditions warrant. In addition, the FTL is to ensure that each team member has been acclimatized to the prevailing environmental conditions, that personnel are aware of the signs and symptoms of heat sickness, that they have been adequately trained in first aid procedures, and that there are enough personnel on-Site to rotate work assignments and schedule work during hours of reduced temperatures. Personnel should not consume alcoholic or caffeinated beverages but rather drink moderate levels of an electrolyte solution and eat well prior to commencing Site work.

2. Although there is no specific test given during a baseline physical that would identify a person's intolerance to heat, some indicators are tobacco or medication use, dietary habits, body weight, and chronic conditions such as high blood pressure or diabetes.

3. Heat cramps, caused by profuse perspiration with inadequate fluid intake and salt replacement, most often afflict people in good physical condition who work in high temperature and humidity. Heat cramps usually come on suddenly during vigorous activity. Untreated, heat cramps may progress rapidly to heat exhaustion or heat stroke. First aid treatment: remove victim to a cool place and replace lost fluids with water.

4. Thirst is not an adequate indicator of heat exposure. Drinking fluid by itself does not indicate sufficient water replacement during heat exposure. A general rule, the amount of water administered should replace the amount of water lost, and it should be administered at regular intervals throughout the day. For every half pound of water lost, 8 ounces of water should be ingested. Water should be replaced by drinking 2 – 4 ounce servings during every rest period. A recommended alternative to water is an electrolyte drink split 50/50 with water.

5. Heat exhaustion results from salt and water loss along with peripheral pooling of blood. Like heat cramps, heat exhaustion tends to occur in persons in good physical health who are working in high temperatures and humidity. Heat exhaustion may come on suddenly as dizziness and collapse. Untreated, heat exhaustion may progress to heat stroke.

6. Treatment for heat exhaustion: Move the victim to a cool environment (e.g. air-conditioned room/car), lay victim down and fan him/her. If the air-conditioning is not available, remove the victim to a shaded area, remove shirt, and fan. If symptoms do not subside within an hour, notify 911 to transport to hospital.

7. Heat stroke results from the body's inability to dissipate excess heat. A true medical emergency that requires immediate care, it usually occurs when one ignores the signs of heat exhaustion and continues strenuous activities. Working when the relative humidity exceeds 60% is a particular problem. Workers in the early phase of heat stress may not be coherent of they will be confused, delirious or comatose. Changes in behavior, irritability and combativeness are useful early signs of heat stroke.

8. Treatment of heat stroke: Move the victim to a cool, air-conditioned environment. Place victim in a semi-reclined position with head elevated and strip to underclothing. Cool victim as rapidly as possible, applying ice packs to the arms and legs and massaging the neck and torso. Spray victim with tepid water and constantly fan to promote evaporation. Notify 911 to transport to hospital as soon as possible.

TABLE 1

SYMPTOMS OF HEAT STRESS

Heat cramps are caused by heavy sweating with inadequate fluid intake. Symptoms include;

- Muscle cramps
- Cramps in the hands, legs, feet and abdomen

Heat exhaustion occurs when body organs attempt to keep the body cool. Symptoms include;

- Pale, cool moist skin
- Core temperature elevated 1-2°
- Thirst
- Anxiety
- Rapid heart rate
- Heavy sweating
- Dizziness
- Nausea

Heat stroke is the most serious form of heat stress. Immediate action must be taken to cool the body before serious injury and death occur. Symptoms are;

- Red, hot, dry skin
- Lack of perspiration
- Seizures
- Dizziness and confusion
- Strong, rapid pulse
- Core temperature of 104° or above
- Coma

COLD STRESS

Cold stress (Hypothermia)

In hypothermia the core body temperature drops below 95$_o$F. Hypothermia can be attributed to a decrease in heat production, increased heat loss or both.

Prevention

Institute the following steps to prevent overexposure of workers to cold:

1. Maintain body core temperature at 98.6$_o$F or above by encouraging workers to drink warm liquids during breaks (preferably not coffee) and wear several layers of clothing that can keep the body warm even when the clothing is wet.

2. Avoid frostbite by adequately covering hands, feet and other extremities. Clothing such as insulated gloves or mittens, earmuffs and hat liners should be worn. To prevent contact frostbite (from touching metal and cold surfaces below 20$_o$F), workers should wear gloves. Tool handles should be covered with insulating material.

3. Adjust work schedules to provide adequate rest periods. When feasible, rotate personnel and perform work during the warmer hours of the day.

4. Provide heated shelter. Workers should remove their outer layer(s) of clothing while in the shelter to allow sweat to evaporate.

5. In the event that wind barriers are constructed around an intrusive operation (such as drilling), the enclosure must be properly vented to prevent the buildup of toxic or explosive gases or vapors. Care must be taken to keep a heat source away from flammable substances.

6. Using a wind chill chart such as the one in Table 3, obtain the equivalent chill temperature (ECT) based on actual wind speed and temperature. Refer to the ECT when setting up work warm-up schedules, planning appropriate clothing, etc. Workers should use warming shelters at regular intervals at or below an ECT of 20$_o$F. For exposed skin, continuous exposure should not be permitted at or below an ECT of -25$_o$F.

Frostbite

Personnel should be aware of symptoms of frostbite/hypothermia. If the following symptoms are noticed in any worker, he/she should immediately go to a warm shelter.

1. Frostnip is the incipient stage of frostbite, brought about by direct contact with a cold object or exposure of a body part to cool/cold air. Wind chill or cold water also can be major factors. This condition is not serious. Tissue damage is minor and the response to care is good. The tip of the nose, tips of ears, upper cheeks and fingers (all areas generally exposed) are most susceptible to frostnip.

2. Treatment of frostnip: Care for frostnip by warming affected areas. Usually the worker can apply warmth from his/her bare hands, blow warm air on the Site, or, if the fingers are involved, hold them in the armpits. During recovery, the worker may complain of tingling or burning sensation, which is normal. If the condition does not respond to this simple care, begin treatment for frostbite.

3. Frostbite: The skin and subcutaneous layers become involved. If frostnip goes untreated, it

becomes superficial frostbite. This condition is serious. Tissue damage may be serious. The worker must be transported to a medical facility for evaluation. The tip of the nose, tips of ears, upper cheeks and fingers (all areas generally exposed) are most susceptible to frostbite. The affected area will feel frozen, but only on the surface. The tissue below the surface must still be soft and have normal response to touch. DO NOT squeeze or poke the tissue. The condition of the deeper tissues can be determined by gently palpating the affected area. The skin will turn mottled or blotchy. It may also be white and then turn grayish-yellow.

4. Treatment of frostbite: When practical, transport victim as soon as possible. Get the worker inside and keep him/her warm. Do not allow any smoking or alcohol consumption. Thaw frozen parts by immersion, re-warming in a 100°F to 106°F water bath. Water temperature will drop rapidly, requiring additional warm water throughout the process. Cover the thawed part with a dry sterile dressing. Do not puncture or drain any blisters.

NOTE: Never listen to myths and folk tales about the care of frostbite. Never rub a frostbitten or frozen area. Never rub snow on a frostbitten or frozen area. Rubbing the area may cause serious damage to already injured tissues. Do not attempt to thaw a frozen area if there is any chance it will be re-frozen.

5. General cooling/Hypothermia: General cooling of the body is known as systemic hypothermia. This condition is not a common problem unless workers are exposed to cold for prolonged periods of time without any shelter.

6. Treatment of hypothermia: Keep worker dry. Remove any wet clothing and replace with dry clothes, or wrap person in dry blankets. Keep person at rest. Do not allow him/her to move around. Transport the victim to a medical facility as soon as possible.

APPENDIX C

CHEMICAL HAZARDS

APPENDIX D

DAILY AIR MONITORING RECORD FORM

APPENDIX E

CONFINED SPACE ENTRY CHECKLIST PERMIT

APPENDIX H

SITE SAFETY ACKNOWLEDGEMENT FORM

SITE SAFETLY PLAN ACKNOWLEDGEMENT FORM

I have been informed and understand the procedures set forth in the health and safety plan and amendments:

Printed Name	**Signature**	**Representing**	**Date**

APPENDIX G

SITE SAFETY PLAN AMENDMENTS

SITE SAFETY PLAN AMENDMENT FORM

SITE SAFETY PLAN AMENDMENT _____: _____

SITE NAME:_____

REASON FOR AMENDMENT:_____

_____

_____

ALTERNATE PROCEDURES:_____

_____

_____

REQUIRED CHANGES IN PPE:_____

_____

_____

_____ _____

Project Superintendent Date

_____ _____

Health & Safety Consultant Date

_____ _____

Site Safety Officer Date

APPENDIX F
HOSPITAL
INFO &
ROUTE

526 Union Ave, Brooklyn, NY 11211 to 960 Manhattan Ave, Brooklyn, NY 11222

Drive 1.5 miles, 10 min

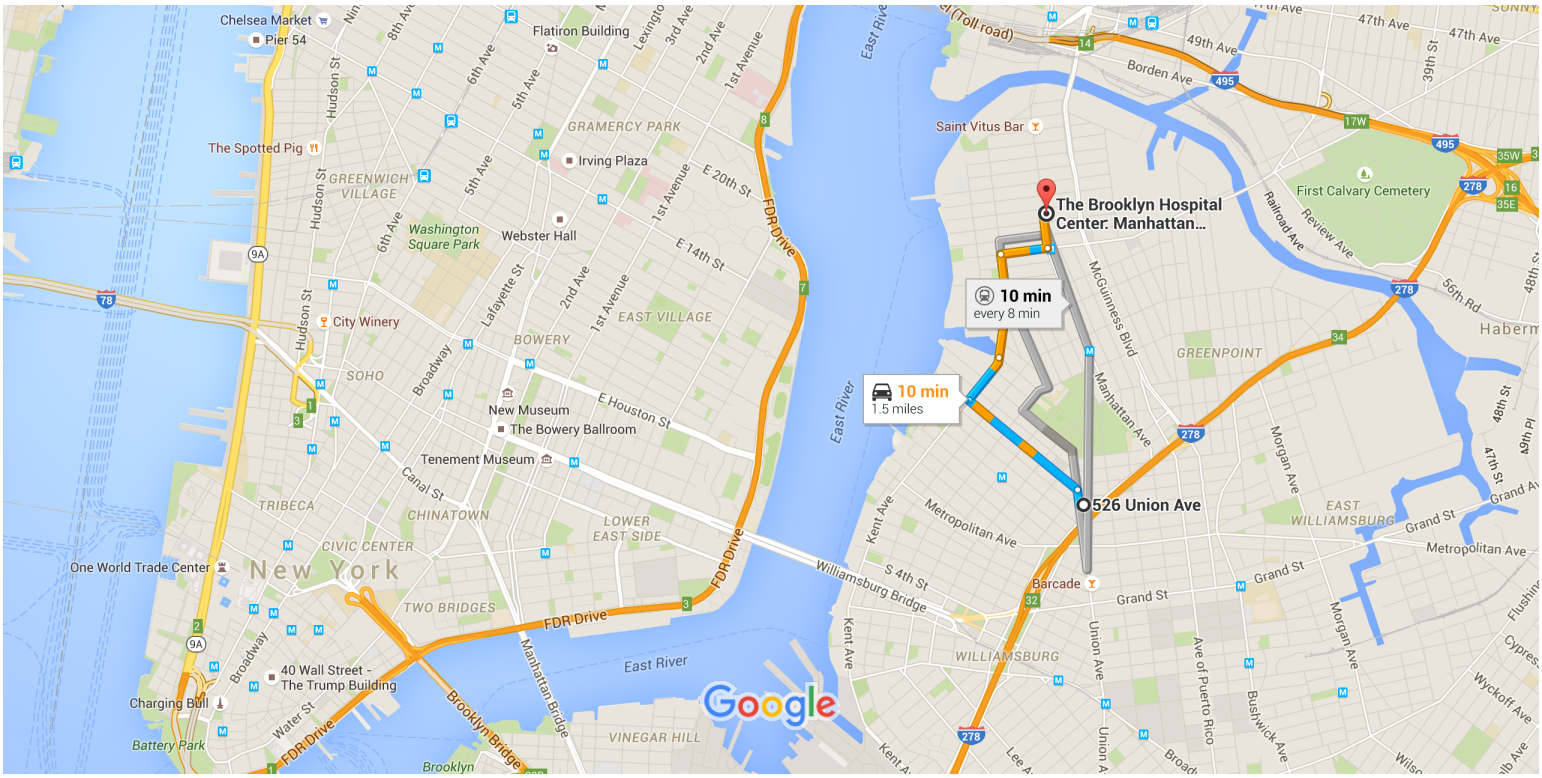

Map data ©2015 Google 2000 ft

526 Union Ave

Brooklyn, NY 11211

1. Head north on Union Ave toward Withers St — 305 ft
2. Slight left onto N 10th St — 0.5 mi
3. Turn right onto Kent Ave — 0.2 mi
4. Continue onto Franklin St — 0.4 mi
5. Turn right onto Greenpoint Ave — 0.2 mi
6. Turn left at the 1st cross street onto Manhattan Ave — 0.1 mi
   Destination will be on the right

The Brooklyn Hospital Center: Manhattan Avenue Health Center

960 Manhattan Avenue, Brooklyn, NY 11222

These directions are for planning purposes only. You may find that construction projects, traffic, weather, or other events may cause conditions to differ from the map results, and you should plan your route accordingly. You must obey all signs or notices regarding your route.

APPENDIX 6

VAPOR BARRIER SPECIFICATIONS

VAPORBLOCK® VB15, VBLP15 & VBGL15

High Performance Underslab Vapor Barrier

RAVEN ENGINEERED FILMS

Product Description

VaporBlock® is a high performance, multi-layer underslab vapor barrier designed to retard moisture migration through concrete slabs and concrete walls to protect your structure from:

- MOLD: VaporBlock® reduces moisture condensation within a structure, impeding the growth of molds, mildews, and fungi.
- MOISTURE: VaporBlock® protects flooring materials by maintaining moisture levels well below the requirements of ASTM E-1745-11.
- RADON: VaporBlock® is used as a component of radon mitigation systems to protect indoor air quality and occupant health.

VaporBlock® is one of the most effective underslab vapor barriers on the market today! Benefits include:

- Virtually Zero Moisture Vapor Permeability
- Superior Puncture and Impact Resistance
- Resistance to decay and degradation

VaporBlock® VBLP15 meets an impressive virtually zero-perm rating at less than 0.01 perms after conditioning to exceed requirements in ACI 302.2R-06, section 9.3.

VaporBlock® G™ VBGL15 can help achieve a higher LEED rating by qualifying for Credit 4 (Recycled Content) of Materials and Resources by containing a minimum of 10% post-consumer recycled polyethylene for 1 LEED point on qualifying projects.

VaporBlock® is manufactured to strict conformance specifications under our ISO 9001-2008 Certified Management System to consistently exceed ASTM standards and project expectations. Raven's accredited lab ensures VaporBlock® meets the highest possible quality standards across multiple industries. VaporBlock® is supported with independent testing. Results are available upon request, as required under ASTM E-1745-11. VaporBlock® is readily available through nationwide distribution:

- Available in three 15 mil options for optimal project flexibility
- Larger roll sizes equal lower installation costs

Raven Industries manufactures VaporBlock® and controls all aspects from start to finish assuring the final product meets our high performance standards. Raven is a publicly-traded company, with over 50 years of stability and service excellence to stand behind our products with a future of innovation and growth.

VaporBlock® UNDERSLAB VAPOR BARRIER

Vapor Barrier - Commercial

Product	Part #
VAPORBLOCK 15	VB15
VAPORBLOCK 15 LOW PERM	VBLP15
VAPORBLOCK GREEN	VBGL15

APPLICATIONS

- Underslab Vapor Retarder/Barrier
- Foundation Wall Vapor Retarder
- Radon Retarder

Note: All instructions on architectural or structural drawings should be reviewed and followed. Detailed installation instructions accompany each roll of VaporBlock and can also be located on our website.

ASTM E-1643 also provides general installation information for vapor retarders. All VaporBlock series materials can be installed with print or color facing up or down and will provide the same performance.

ASTM E-1745-11, "Plastic Water Vapor Retarders Used in Contact with Soil or Granular Fill Under Concrete Slabs".

© 2014 RAVEN INDUSTRIES INC. All rights reserved.

VAPORBLOCK® VB15, VBLP15 & VBGL15

High Performance Underslab Vapor Barrier

PRO-FORMA DATA SHEET **VB15

PROPERTIES	TEST METHOD	VAPORBLOCK VB15 Imperial	VAPORBLOCK VBLP15 Imperial	VAPORBLOCK VBGL15 Imperial	ASTM E 1745-11 Class A, B & C[1] Imperial
Appearance		Blue	Blue/White	Green	-
Thickness, Nominal		15 mil	15 mil	15 mil	-
Roll Size		12 ft x 200 ft	12 ft x 200 ft	12 ft x 200 ft	-
Weight		73 lbs/MSF	73 lbs/MSF	76 lbs/MSF	-
Classification	ASTM E1745-11	CLASS A, B & C	CLASS A, B & C	CLASS A, B & C	Class A, B, or C
Tensile Strength Average MD & TD (New Material) (After Exposure)	ASTM E154 Section 9, (D882)	60 lbs/in 61 lbs/in	78 lbs/in 80 lbs/in	50 lbs/in 50 lbs/in	Class A = 45 lbs/in Class B = 30 lbs/in Class C = 13.6 lbs/in Minimum
Puncture Resistance	ASTM D1709 Method B	>3300 g	>3300 g	>4000 g	Class A = 2200 g Class B = 1700 g Class C = 475 g Minimum
Permeance (New Material) (After Conditioning)	ASTM E154 Section 7 ASTM E96 Procedure B ASTM E154 Section 8, E96 Section 11, E96 Section 12, E96 Section 13, E96	0.018 *Perms 0.018 0.018 0.018 0.018	0.0057 *Perms 0.0076 0.0075 0.0076 0.0053	0.0134 *Perms 0.0139 0.0124 0.0115 0.0137	Class A, B, & C 0.1 *Perms Maximum
WVTR	ASTM E96 Procedure B	0.0075 grain/hr-ft^2	0.0023 grain/hr-ft^2	0.0057 grain/hr-ft^2	-
Maximum Use Temperature		180° F	180° F	180° F	-
Minimum Use Temperature		-70° F	-70° F	-70° F	-

* grains/(ft^2·hr·in Hg)

[1] Referencing ASTM E1745-11, Standard Specification for Plastic Water Vapor Retarders Used in Contact with Soil or Granular Fill under Concrete Slabs

**PRO-FORMA Contents: Data listed for VaporBlock® VB15 is extrapolated from similar products and initial prototypes and is subject to change at any time as additional test data becomes available.

VaporBlock® UNDERSLAB VAPOR BARRIER

VaporBlock® VB15 and VBLP15 can be identified as blue or blue/white, and VBGL15 as green in color and all three products are printed with the brand logo and the conformance classification information listing ASTM E-1745, Class A.

Note: To the best of our knowledge, unless otherwise stated, these are typical property values and are intended as guides only, not as specification limits. Chemical resistance, odor transmission, longevity as well as other performance criteria is not implied or given and actual testing must be performed for applicability in specific applications and/or conditions. RAVEN INDUSTRIES MAKES NO WARRANTIES AS TO THE FITNESS FOR A SPECIFIC USE OR MERCHANTABILITY OF PRODUCTS REFERRED TO, no guarantee of satisfactory results from reliance upon contained information or recommendations and disclaims all liability for resulting loss or damage. Limited Warranty available at www.RavenEFD.com

RAVEN INDUSTRIES

Engineered Films Division
P.O. Box 5107
Sioux Falls, SD 57117-5107
Ph: (605) 335-0174 • Fx: (605) 331-0333

Toll Free: **800-635-3456**
Email: **efdsales@ravenind.com**
www.ravenefd.com

3/14 EFD 1484

Scan QR Code to download current technical data sheets via the Raven website.

APPENDIX 7

PREVIOUS ENVIRONMENTAL REPORTS

August 4, 3014

Mr. Isaac Hagar
Cornell Realty Management
75 Huntington St
Brooklyn, NY 11231

Re: **526 Union Avenue, Brooklyn, NY**
Block 2741 Lot 3

Dear Hagar:

Environmental Business Consultants (EBC) performed a Phase II subsurface investigation at the above referenced property on July 29, 2014 to assess the environmental condition of the property with respect to redevelopment under a Hazmat "E" designation. As you are aware, the property was assigned E - designations (E-138) for Hazmat during the Greenpoint - Williamsburg rezoning action completed by the City in October 2005. The E-designation will have to be addressed before building permits can be obtained. However, no action is required for the property in its current use.

Property Description
The street address for the Site is 818 Lexington Avenue, Brooklyn, New York 11211. The Site is identified as Block 2741, Lot 3 on the Borough of Brooklyn Tax Map (Kings County). The rectangular shaped lot is located on the east side of Union Avenue. The square shaped lot has 100 feet of frontage along Union Avenue is 100 feet deep for a total area of 10,000 ft^2 (0.229 acres).

Historically the property was used as a metal scrap yard from 1916 through 2007. Prior to 1916 it was used as a barrel storage yard. Some time after 2007 the scrap yard vacated the property. At the time of the investigation, the Site was being used as a parking area for cars and trucks.

Subsurface Investigation
The field work portion of the investigation was performed on July 29, 2014. The work consisted of the installation of six soil borings and three groundwater monitoring wells.

Soil Borings
Five soil boring locations (B1 through B5) were selected as shown on **Figure 2** to gain representative soil quality information from across the site.

All of the borings were advanced with Geoprobe™ direct push equipment and sampled with a 5 foot macro core sampler using disposable acetate liners. Retrieved sample cores were characterized by an Environmental Professional and field screened for the presence of volatile organic compounds (VOCs) using a photo-ionization detector (PID).

Soil was characterized as a brown silty sand with some historic fill material mixed in from surface grade to approximately 10 feet below grade followed by a grey-brown clay with organic matter to the termination depth. Based on the depth shallow to groundwater soil, soil samples were collected within the shallow fill and at the 8-10 foot groundwater interface.

Groundwater
EBC collected three groundwater samples on July 29, 2014 from three monitoring wells (MW1-MW3) as shown on **Figure 2**. Monitoring wells installed were 1" PVC advanced 15 feet below surface grade with 10 feet of slotted screen intersecting the water table, which was present at approximately 8 feet below grade. Groundwater samples were collected from each monitoring well utilizing s peristaltic pump and dedicated polyethylene tubing which was replaced between sampling locations.

Sample Handling and Analysis
Collected samples were appropriately packaged, placed in coolers and shipped via laboratory dispatched courier for delivery to Phoenix Environmental Laboratories (Phoenix) of 587 East Middle Turnpike, Manchester, CT 06040, a New York State ELAP certified environmental laboratory (ELAP Certification No. 11301). Soil samples were analyzed for one or more of the following parameters depending on depth: volatile organic compounds (VOCs) by USEPA method 8260, semi-volatile organic Compounds (SVOCs) by USEPA method 8270, TAL metals and TCLP metals. Groundwater samples were analyzed for VOCs by EPA method 8260.

Results

Soil
Soil sample results were compared to the Unrestricted Use and Restricted Residential Use Soil Cleanup Objectives (SCOs) as presented in NYSDEC CP51 Soil Cleanup Guidance (10/21/10). Analytical data for the soil samples are summarized in **Table 1** and a copy of the laboratory analytical report is included in **Appendix A**.

As presented in the attached table, with the exception of acetone (a common laboratory introduced contaminant) there were no VOCs or SVOCs detected above Unrestricted Use SCOs in any of the samples collected.

As presented in the attached table, one of more metals including, arsenic, barium, cadmium, chromium, lead, mercury, nickel, silver and zinc were detected above their Unrestricted or Restricted Residential Use SCOs in samples of the shallow fill at all five boring locations. No other metals were detected above their SCOs within the remainder of soil samples collected.

Groundwater
Groundwater results were compared to the New York State Ambient Water Quality Standards and Guidance Values (6 NYCRR Part 703) as presented in the Technical & Operational Guidance Series (TOGS) 1.1.1 (1998). Analytical data for the groundwater samples are summarized in the attached table. A copy of the laboratory analytical report is provided in **Appendix A**.

As presented in the attached table, there were several minor detections of VOCs in all three wells though none were reported above groundwater standards.

Conclusions and Recommendations

Subsurface soil at the site consisted of urban fill, which was primarily comprised of brick, concrete, wood and other debris in a brown sandy matrix to a depth of approximately 10 feet, underlain by native grey-black clay with organic matter to the termination depth of 15 feet below grade. The groundwater interface was encountered at approximately 8 feet below grade.

Several metals were reported in the fill materials above unrestricted and or restricted residential use SCOs. The concentrations were generally low and consistent with that commonly found in historic fill material found throughout the five boroughs. The 0-2 ft sample from the B5 location had high levels of barium and arsenic, however both parameters were well below their respective TCLP limits.

The VOC detections reported in groundwater are attributable to background conditions and were all well below groundwater standards.

Based on the results of the investigation, the past uses of the site have not impacted the soil or groundwater at the site and no further investigation is warranted. However, to meet the requirements of the E-designation program for redevelopment of the Site, special soil handling and disposal of excavated soil will need to be specified in a soil management plan before a Notice to Proceed can be obtained from the NYC Office of Environmental Remediation (OER).

Please call if you have any questions or would like to discuss the project further.

Very truly yours,
Environmental Business Consultant

Charles B. Sosik, P.G., P.H.G.
Principal

FIGURES

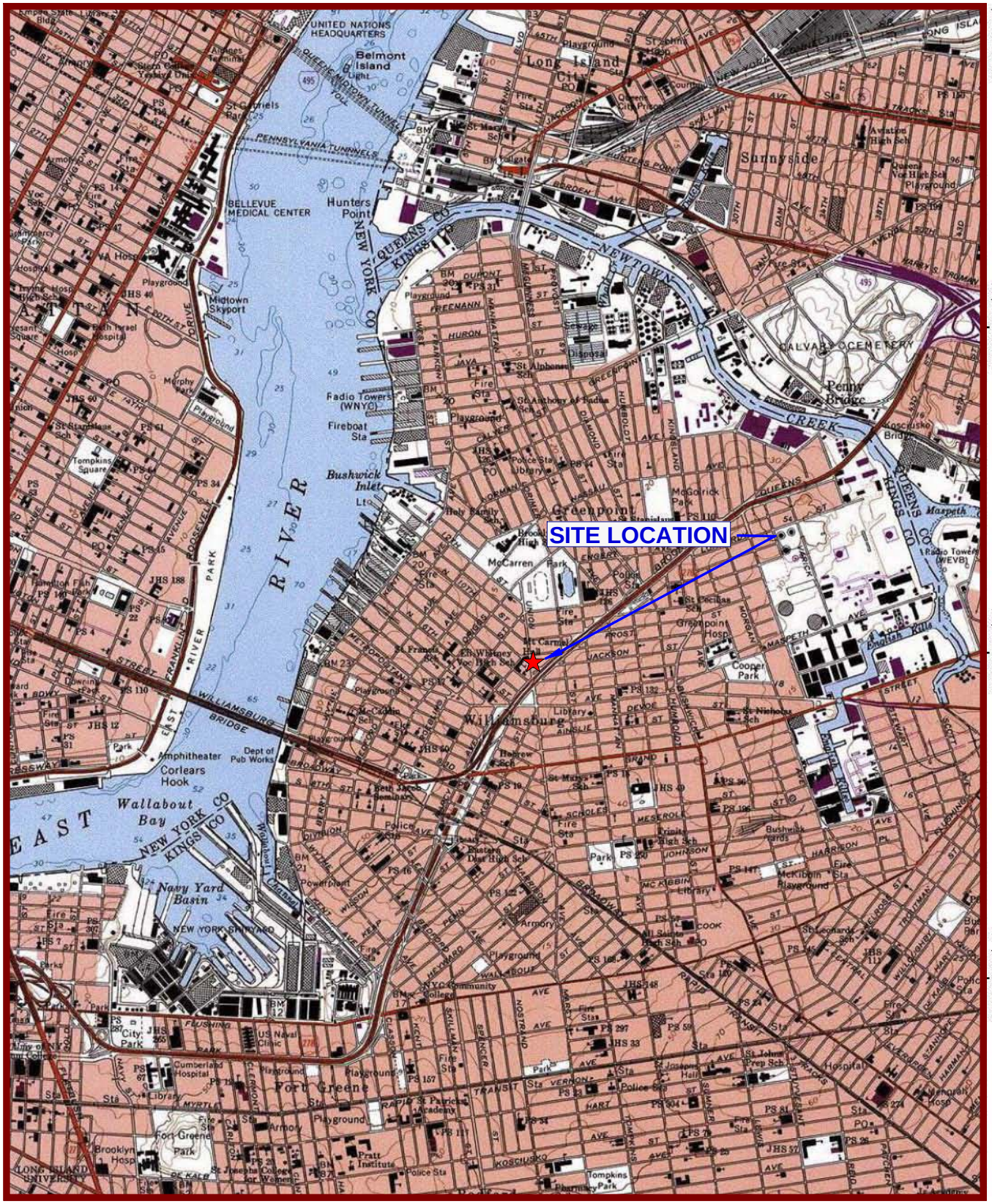

USGS Brooklyn Quadrangle 1995, Contour Interval = 10 feet

EBC
ENVIRONMENTAL BUSINESS CONSULTANTS
Phone 631.504.6000
Fax 631. 924 .2870

526 UNION AVENUE
BROOKLYN, NY

FIGURE 1 SITE LOCATION MAP

EBC
Environmental Business Consultants
1808 Middle Country Road, Ridge, NY 11961
Phone: 631.504.6000
Fax: 631.924.2780

526 Union Avenue
Brooklyn, NY

FIGURE 2 Sampling Locations

TABLES

Phoenix Environmental Laboratories, Inc.
587 East Middle Turnpike
P.O. Box 370
Manchester, CT 06040
(860) 645-1102

Project Id : 526 UNION AVE., BROOKLYN

	Units	40 CFR 261.24	NY-Res.	NY-ResRestrict	NY-UnRestricted	TAGM-GW	TOGS-WQ/GA
Lab Sample Id							
Collection Date							
Client Id							
Matrix							
Miscellaneous/Inorganics							
Percent Solid	%						
Metals, Total							
Aluminum	mg/Kg						
Antimony	mg/Kg						
Arsenic	mg/Kg		16	16	13		
Barium	mg/Kg		350	400	350		
Beryllium	mg/Kg		14	72	7.2		
Cadmium	mg/Kg		2.5	4.3	2.5		
Calcium	mg/Kg						
Chromium	mg/Kg				30		
Cobalt	mg/Kg						
Copper	mg/Kg		270	270	50		
Iron	mg/Kg						
Lead	mg/Kg		400	400	63		
Magnesium	mg/Kg						
Manganese	mg/Kg		2,000	2,000	1,600		
Mercury	mg/Kg		0.81	0.81	0.18		
Nickel	mg/Kg		140	310	30		
Potassium	mg/Kg						
Selenium	mg/Kg		36	180	3.9		
Silver	mg/Kg		36	180	2		
Sodium	mg/Kg						
Thallium	mg/Kg						
Vanadium	mg/Kg						
Zinc	mg/Kg		2,200	10,000	109		
Metals, TCLP							
TCLP Arsenic	mg/L	5					
TCLP Barium	mg/L	100					
TCLP Cadmium	mg/L	1					
TCLP Chromium	mg/L	5					
TCLP Lead	mg/L	5					
TCLP Mercury	mg/L	0.2					
TCLP Selenium	mg/L	1					
TCLP Silver	mg/L	5					
Volatiles By SW8260							
1,1,1,2-Tetrachloroethane	ug/L						5
1,1,1-Trichloroethane	ug/L					5	5
1,1,2,2-Tetrachloroethane	ug/L					5	5
1,1,2-Trichloroethane	ug/L						1
1,1-Dichloroethane	ug/L					5	5
1,1-Dichloroethene	ug/L					5	5
1,1-Dichloropropene	ug/L						5
1,2,3-Trichlorobenzene	ug/L						
1,2,3-Trichloropropane	ug/L					5	0.04
1,2,4-Trichlorobenzene	ug/L						
1,2,4-Trimethylbenzene	ug/L						5
1,2-Dibromo-3-chloropropane	ug/L						0.04
1,2-Dibromoethane	ug/L						0.0006
1,2-Dichlorobenzene	ug/L					4.7	
1,2-Dichloroethane	ug/L					5	0.6
1,2-Dichloropropane	ug/L						1
1,3,5-Trimethylbenzene	ug/L						5
1,3-Dichlorobenzene	ug/L					5	3
1,3-Dichloropropane	ug/L					5	5
1,4-Dichlorobenzene	ug/L					5	
2,2-Dichloropropane	ug/L						5
2-Chlorotoluene	ug/L						5
2-Hexanone	ug/L						50
2-Isopropyltoluene	ug/L						5
4-Chlorotoluene	ug/L						5
4-Methyl-2-pentanone	ug/L					50	
Acetone	ug/L					50	50
Acrolein	ug/L						5
Acrylonitrile	ug/L						5
Benzene	ug/L					0.7	1
Bromobenzene	ug/L						5
Bromochloromethane	ug/L						5
Bromodichloromethane	ug/L						50
Bromoform	ug/L						50
Bromomethane	ug/L						5
Carbon Disulfide	ug/L					50	
Carbon tetrachloride	ug/L					5	5
Chlorobenzene	ug/L					5	5
Chloroethane	ug/L					50	5
Chloroform	ug/L					7	7
Chloromethane	ug/L						5
cis-1,2-Dichloroethene	ug/L						5
cis-1,3-Dichloropropene	ug/L						0.4
Dibromochloromethane	ug/L					50	50
Dibromomethane	ug/L						5
Dichlorodifluoromethane	ug/L						5
Ethylbenzene	ug/L					5	5
Hexachlorobutadiene	ug/L						0.5
Isopropylbenzene	ug/L						5
m&p-Xylene	ug/L						
Methyl ethyl ketone	ug/L					50	50
Methyl t-butyl ether (MTBE)	ug/L						

Lab Sample Id	BG85525		BG85526		BG85527		BG85528		BG85529		BG85530		BG85531		BG85532		BG85533		BG85534		BG85535		BG85536		BG85537	
Collection Date	7/29/2014		7/29/2014		7/29/2014		7/29/2014		7/29/2014		7/29/2014		7/29/2014		7/29/2014		7/29/2014		7/29/2014		7/29/2014		7/29/2014		7/29/2014	
Client Id	B1 0-2		B1 8-10		B2 3-5		B2 8-10		B3 0-2		B3 8-10		B4 2-4		B4 8-10		B5 0-2		B5 8-10		GW1		GW2		GW3	
Matrix	Soil		Soil		Soil		Soil		Soil		Soil		Soil		Soil		Soil		Soil		Ground Water		Ground Water		Ground Water	
	Result	RL	Result	RL	Result	RL	Result	RL	Result	RL	Result	RL	Result	RL	Result	RL	Result	RL	Result	RL	Result	RL	Result	RL	Result	RL
Miscellaneous/Inorganics																										
Percent Solid	94		76		89		81		87		77		89		81		85		75							
Metals, Total																										
Aluminum	7,360	33			5,040	33			5,860	38			4,010	35			5,630	38								
Antimony	< 1.6	1.6			< 1.7	1.7			< 1.9	1.9			< 1.7	1.7			50.3	1.9								
Arsenic	2.6	0.7			4.3	0.7			4.3	0.8			6.2	0.7			108	0.8								
Barium	56	0.7			76.6	0.7			69.3	0.8			56.6	0.7			2,730	7.6								
Beryllium	0.47	0.26			0.38	0.26			< 0.30	0.3			< 0.28	0.28			0.6	0.31								
Cadmium	0.7	0.33			0.6	0.33			1.69	0.38			5.48	0.35			42.7	0.38								
Calcium	1,520	3.3			2,100	3.3			50,900	38			869	3.5			8,820	3.8								
Chromium	21.1	0.33			23.9	0.33			33.1	0.38			19.1	0.35			198	3.8								
Cobalt	8.04	0.33			4.82	0.33			5.7	0.38			16.6	0.35			43.9	0.38								
Copper	33.1	0.33			12	0.33			49.4	0.38			41.6	0.35												
Iron	19,500	33			13,900	33			16,400	38																
Lead	109	0.7			166	6.6			85.7	0.8			241	6.9												
Magnesium	2,320	3.3			1,050	3.3			13,300	38			451	3.5			2,310	3.8								
Manganese	232	3.3			127	3.3			212	3.8			776	3.5												
Mercury	0.27	0.07			0.53	0.06			30.9	3.3			0.64	0.08			16.9	3.9								
Nickel	14.4	0.33			15.5	0.33			18.1	0.38			21.8	0.35			323	3.8								
Potassium	1,320	7			1,460	7			1,110	8			994	7			502	8								
Selenium	< 1.3	1.3			< 1.3	1.3			< 1.5	1.5			< 1.4	1.4			< 1.5	1.5								
Silver	< 0.33	0.33			< 0.33	0.33			< 0.38	0.38			< 0.35	0.35			7.29	0.38								
Sodium	101	7			109	7			184	8			99	7			290	8								
Thallium	< 1.3	1.3			< 1.3	1.3			< 1.5	1.5			< 1.4	1.4			< 1.5	1.5								
Vanadium	28.8	0.3			17.8	0.3			30.3	0.4			35.3	0.3			46	0.4								
Zinc	75.8	0.7			417	6.6			124	0.8			192	6.9												
Metals, TCLP																										
TCLP Arsenic	< 0.10	0.1			< 0.10	0.1			< 0.10	0.1			< 0.10	0.1			< 0.10	0.1								
TCLP Barium	< 0.10	0.1			0.3	0.1			0.93	0.1			0.21	0.1			1.55	0.1								
TCLP Cadmium	< 0.050	0.05			< 0.050	0.05							< 0.050	0.05			0.273	0.05								
TCLP Chromium	1.25	0.1			< 0.10	0.1			0.23	0.1			< 0.10	0.1			< 0.10	0.1								
TCLP Lead	< 0.10	0.1			0.17	0.1			3.37	0.1			0.45	0.1												
TCLP Mercury	< 0.0002	0.0002			< 0.0002	0.0002			< 0.0002	0.0002			< 0.0002	0.0002			0.0005	0.0002								
TCLP Selenium	< 0.10	0.1			< 0.10	0.1			< 0.10	0.1			< 0.10	0.1			< 0.10	0.1								
TCLP Silver	< 0.10	0.1			< 0.10	0.1			< 0.10	0.1			< 0.10	0.1			< 0.10	0.1								
Volatiles By SW8260																										
1,1,1,2-Tetrachloroethane																					< 1.0	1	< 1.0	1	< 1.0	1
1,1,1-Trichloroethane																					< 5.0	5	< 5.0	5	< 5.0	5
1,1,2,2-Tetrachloroethane																					< 1.0	1	< 1.0	1	< 1.0	1
1,1,2-Trichloroethane																					< 1.0	1	< 1.0	1	< 1.0	1
1,1-Dichloroethane																					< 5.0	5	0.38	5	< 5.0	5
1,1-Dichloroethene																					< 1.0	1	< 1.0	1	< 1.0	1
1,1-Dichloropropene																					< 1.0	1	< 1.0	1	< 1.0	1
1,2,3-Trichlorobenzene																					< 1.0	1	< 1.0	1	< 1.0	1
1,2,3-Trichloropropane																					< 1.0	1	< 1.0	1	< 1.0	1
1,2,4-Trichlorobenzene																					< 1.0	1	< 1.0	1	< 1.0	1
1,2,4-Trimethylbenzene																					< 1.0	1	< 1.0	1	< 1.0	1
1,2-Dibromo-3-chloropropane																					< 1.0	1	< 1.0	1	< 1.0	1
1,2-Dibromoethane																					< 1.0	1	< 1.0	1	< 1.0	1
1,2-Dichlorobenzene																					< 1.0	1	< 1.0	1	< 1.0	1
1,2-Dichloroethane																					< 0.60	0.6	< 0.60	0.6	< 0.60	0.6
1,2-Dichloropropane																					< 1.0	1	< 1.0	1	< 1.0	1
1,3,5-Trimethylbenzene																					< 1.0	1	< 1.0	1	< 1.0	1
1,3-Dichlorobenzene																					< 5.0	5	< 5.0	5	< 5.0	5
1,3-Dichloropropane																					< 1.0	1	< 1.0	1	< 1.0	1
1,4-Dichlorobenzene																					< 5.0	5	< 5.0	5	< 5.0	5
2,2-Dichloropropane																					< 1.0	1	< 1.0	1	< 1.0	1
2-Chlorotoluene																					< 1.0	1	< 1.0	1	< 1.0	1
2-Hexanone																					< 1.0	1	< 1.0	1	< 1.0	1
2-Isopropyltoluene																					< 1.0	1	< 1.0	1	< 1.0	1
4-Chlorotoluene																					< 1.0	1	< 1.0	1	< 1.0	1
4-Methyl-2-pentanone																					< 1.0	1	< 1.0	1	< 1.0	1
Acetone																					9.9	5	12	5	9	5
Acrolein																					< 5.0	5	< 5.0	5	< 5.0	5
Acrylonitrile																					< 5.0	5	< 5.0	5	< 5.0	5
Benzene																					0.21	0.7	< 0.70	0.7	< 0.70	0.7
Bromobenzene																					< 1.0	1	< 1.0	1	< 1.0	1
Bromochloromethane																					< 1.0	1	< 1.0	1	< 1.0	1
Bromodichloromethane																					< 1.0	1	< 1.0	1	< 1.0	1
Bromoform																					< 5.0	5	< 5.0	5	< 5.0	5
Bromomethane																					< 5.0	5	< 5.0	5	< 5.0	5
Carbon Disulfide																					< 1.0	1	< 1.0	1	0.38	1
Carbon tetrachloride																					< 1.0	1	< 1.0	1	< 1.0	1
Chlorobenzene																					< 5.0	5	< 5.0	5	< 5.0	5
Chloroethane																					< 5.0	5	< 5.0	5	< 5.0	5
Chloroform																					2.4	5	< 5.0	5	< 5.0	5
Chloromethane																					< 5.0	5	< 5.0	5	< 5.0	5
cis-1,2-Dichloroethene																					< 1.0	1	< 1.0	1	< 1.0	1
cis-1,3-Dichloropropene																					< 0.40	0.4	< 0.40	0.4	< 0.40	0.4
Dibromochloromethane																					< 1.0	1	< 1.0	1	< 1.0	1
Dibromomethane																					< 1.0	1	< 1.0	1	< 1.0	1
Dichlorodifluoromethane																					< 1.0	1	< 1.0	1	< 1.0	1
Ethylbenzene																					< 1.0	1	< 1.0	1	< 1.0	1
Hexachlorobutadiene																					< 1.0	1	< 1.0	1	< 1.0	1
Isopropylbenzene																					< 1.0	1	< 1.0	1	< 1.0	1
m&p-Xylene																					< 1.0	1	< 1.0	1	< 1.0	1
Methyl ethyl ketone																					1.5	1	< 1.0	1	0.65	1
Methyl t-butyl ether (MTBE)																					2.6	1	< 1.0	1	0.28	1

Methylene chloride	ug/L				5	5											< 3.0	3	< 3.0	3	< 3.0	3
Naphthalene	ug/L				5	10											< 1.0	1	< 1.0	1	2.6	1
n-Butylbenzene	ug/L					5											< 1.0	1	< 1.0	1	< 1.0	1
n-Propylbenzene	ug/L					5											< 1.0	1	< 1.0	1	< 1.0	1
o-Xylene	ug/L				5	5											< 1.0	1	< 1.0	1	< 1.0	1
p-Isopropyltoluene	ug/L					5											< 1.0	1	< 1.0	1	< 1.0	1
sec-Butylbenzene	ug/L					5											< 1.0	1	< 1.0	1	< 1.0	1
Styrene	ug/L					5											< 1.0	1	< 1.0	1	< 1.0	1
tert-Butylbenzene	ug/L					5											< 1.0	1	< 1.0	1	< 1.0	1
Tetrachloroethene	ug/L				5	5											< 1.0	1	< 1.0	1	< 1.0	1
Tetrahydrofuran (THF)	ug/L					50											< 5.0	5	< 5.0	5	< 5.0	5
Toluene	ug/L				5	5											< 1.0	1	< 1.0	1	< 1.0	1
trans-1,2-Dichloroethene	ug/L				5	5											< 5.0	5	< 5.0	5	< 5.0	5
trans-1,3-Dichloropropene	ug/L					0.4											< 0.40	0.4	< 0.40	0.4	< 0.40	0.4
trans-1,4-dichloro-2-butene	ug/L					5											< 1.0	1	< 1.0	1	< 1.0	1
Trichloroethene	ug/L				5	5											< 1.0	1	< 1.0	1	< 1.0	1
Trichlorofluoromethane	ug/L					5											< 1.0	1	< 1.0	1	< 1.0	1
Trichlorotrifluoroethane	ug/L				5	5											< 1.0	1	< 1.0	1	< 1.0	1
Vinyl chloride	ug/L				2	2											< 1.0	1	< 1.0	1	< 1.0	1
1,1,1,2-Tetrachloroethane	ug/Kg						< 6.6	6.6	< 6.2	6.2	< 6.5	6.5	< 6.2	6.2	< 6.7	6.7						
1,1,1-Trichloroethane	ug/Kg	100,000	100,000	680			< 6.6	6.6	< 6.2	6.2	< 6.5	6.5	< 6.2	6.2	< 6.7	6.7						
1,1,2,2-Tetrachloroethane	ug/Kg						< 6.6	6.6	< 6.2	6.2	< 6.5	6.5	< 6.2	6.2	< 6.7	6.7						
1,1,2-Trichloroethane	ug/Kg						< 6.6	6.6	< 6.2	6.2	< 6.5	6.5	< 6.2	6.2	< 6.7	6.7						
1,1-Dichloroethane	ug/Kg	19,000	26,000	270			< 6.6	6.6	< 6.2	6.2	< 6.5	6.5	< 6.2	6.2	< 6.7	6.7						
1,1-Dichloroethene	ug/Kg	100,000	100,000	330			< 6.6	6.6	< 6.2	6.2	< 6.5	6.5	< 6.2	6.2	< 6.7	6.7						
1,1-Dichloropropene	ug/Kg						< 6.6	6.6	< 6.2	6.2	< 6.5	6.5	< 6.2	6.2	< 6.7	6.7						
1,2,3-Trichlorobenzene	ug/Kg						< 6.6	6.6	< 310	310	< 320	320	< 6.2	6.2	< 330	330						
1,2,3-Trichloropropane	ug/Kg						< 6.6	6.6	< 310	310	< 320	320	< 6.2	6.2	< 330	330						
1,2,4-Trichlorobenzene	ug/Kg						< 6.6	6.6	< 310	310	< 320	320	< 6.2	6.2	< 330	330						
1,2,4-Trimethylbenzene	ug/Kg	47,000	52,000	3,600			< 6.6	6.6	< 310	310	< 320	320	< 6.2	6.2	< 330	330						
1,2-Dibromo-3-chloropropane	ug/Kg						< 6.6	6.6	< 310	310	< 320	320	< 6.2	6.2	< 330	330						
1,2-Dibromoethane	ug/Kg						< 6.6	6.6	< 6.2	6.2	< 6.5	6.5	< 6.2	6.2	< 6.7	6.7						
1,2-Dichlorobenzene	ug/Kg	100,000	100,000	1,100			< 6.6	6.6	< 310	310	< 320	320	< 6.2	6.2	< 330	330						
1,2-Dichloroethane	ug/Kg	2,300	3,100	20			< 6.6	6.6	< 6.2	6.2	< 6.5	6.5	< 6.2	6.2	< 6.7	6.7						
1,2-Dichloropropane	ug/Kg						< 6.6	6.6	< 6.2	6.2	< 6.5	6.5	< 6.2	6.2	< 6.7	6.7						
1,3,5-Trimethylbenzene	ug/Kg	47,000	52,000	8,400			< 6.6	6.6	< 310	310	< 320	320	< 6.2	6.2	< 330	330						
1,3-Dichlorobenzene	ug/Kg	17,000	49,000	2,400			< 6.6	6.6	< 310	310	< 320	320	< 6.2	6.2	< 330	330						
1,3-Dichloropropane	ug/Kg						< 6.6	6.6	< 6.2	6.2	< 6.5	6.5	< 6.2	6.2	< 6.7	6.7						
1,4-Dichlorobenzene	ug/Kg	9,800	13,000	1,800			< 6.6	6.6	< 310	310	< 320	320	< 6.2	6.2	< 330	330						
2,2-Dichloropropane	ug/Kg						< 6.6	6.6	< 6.2	6.2	< 6.5	6.5	< 6.2	6.2	< 6.7	6.7						
2-Chlorotoluene	ug/Kg						< 6.6	6.6	< 310	310	< 320	320	< 6.2	6.2	< 330	330						
2-Hexanone	ug/Kg						< 33	33	< 31	31	< 32	32	< 31	31	< 33	33						
2-Isopropyltoluene	ug/Kg						< 6.6	6.6	< 310	310	< 320	320	< 6.2	6.2	< 330	330						
4-Chlorotoluene	ug/Kg						< 6.6	6.6	< 310	310	< 320	320	< 6.2	6.2	< 330	330						
4-Methyl-2-pentanone	ug/Kg						< 33	33	< 31	31	< 32	32	< 31	31	< 33	33						
Acetone	ug/Kg	100,000	100,000	50			120	66	190	62	110	65	24	62	64	67						
Acrylonitrile	ug/Kg						< 13	13	< 12	12	< 13	13	< 12	12	< 13	13						
Benzene	ug/Kg	2,900	4,800	60			< 6.6	6.6	< 6.2	6.2	< 6.5	6.5	< 6.2	6.2	< 6.7	6.7						
Bromobenzene	ug/Kg						< 6.6	6.6	< 310	310	< 320	320	< 6.2	6.2	< 330	330						
Bromochloromethane	ug/Kg						< 6.6	6.6	< 6.2	6.2	< 6.5	6.5	< 6.2	6.2	< 6.7	6.7						
Bromodichloromethane	ug/Kg						< 6.6	6.6	< 6.2	6.2	< 6.5	6.5	< 6.2	6.2	< 6.7	6.7						
Bromoform	ug/Kg						< 6.6	6.6	< 6.2	6.2	< 6.5	6.5	< 6.2	6.2	< 6.7	6.7						
Bromomethane	ug/Kg						< 6.6	6.6	< 6.2	6.2	< 6.5	6.5	< 6.2	6.2	< 6.7	6.7						
Carbon Disulfide	ug/Kg						1.2	6.6	2.6	6.2	3	6.5	< 6.2	6.2	< 6.7	6.7						
Carbon tetrachloride	ug/Kg	1,400	2,400	760			< 6.6	6.6	< 6.2	6.2	< 6.5	6.5	< 6.2	6.2	< 6.7	6.7						
Chlorobenzene	ug/Kg	100,000	100,000	1,100			< 6.6	6.6	< 6.2	6.2	< 6.5	6.5	< 6.2	6.2	< 6.7	6.7						
Chloroethane	ug/Kg						< 6.6	6.6	< 6.2	6.2	< 6.5	6.5	< 6.2	6.2	< 6.7	6.7						
Chloroform	ug/Kg	10,000	49,000	370			< 6.6	6.6	< 6.2	6.2	< 6.5	6.5	< 6.2	6.2	< 6.7	6.7						
Chloromethane	ug/Kg						< 6.6	6.6	< 6.2	6.2	< 6.5	6.5	< 6.2	6.2	< 6.7	6.7						
cis-1,2-Dichloroethene	ug/Kg	59,000	100,000	250			< 6.6	6.6	< 6.2	6.2	< 6.5	6.5	< 6.2	6.2	< 6.7	6.7						
cis-1,3-Dichloropropene	ug/Kg						< 6.6	6.6	< 6.2	6.2	< 6.5	6.5	< 6.2	6.2	< 6.7	6.7						
Dibromochloromethane	ug/Kg						< 6.6	6.6	< 6.2	6.2	< 6.5	6.5	< 6.2	6.2	< 6.7	6.7						
Dibromomethane	ug/Kg						< 6.6	6.6	< 6.2	6.2	< 6.5	6.5	< 6.2	6.2	< 6.7	6.7						
Dichlorodifluoromethane	ug/Kg						< 6.6	6.6	< 6.2	6.2	< 6.5	6.5	< 6.2	6.2	< 6.7	6.7						
Ethylbenzene	ug/Kg	30,000	41,000	1,000			< 6.6	6.6	< 6.2	6.2	< 6.5	6.5	< 6.2	6.2	< 6.7	6.7						
Hexachlorobutadiene	ug/Kg						< 6.6	6.6	< 310	310	< 320	320	< 6.2	6.2	< 330	330						
Isopropylbenzene	ug/Kg						+++IND	6.6	< 310	310	< 320	320	< 6.2	6.2	< 330	330						
m&p-Xylene	ug/Kg						< 6.6	6.6	< 6.2	6.2	< 6.5	6.5	< 6.2	6.2	< 6.7	6.7						
Methyl Ethyl Ketone	ug/Kg	100,000	100,000	120			30	39	47	37	< 39	39	< 37	37	16	40						
Methyl t-butyl ether (MTBE)	ug/Kg	62,000	100,000	930			< 13	13	< 12	12	< 13	13	< 12	12	< 13	13						
Methylene chloride	ug/Kg	51,000	100,000	50			1.5	6.6	1.7	6.2	< 6.5	6.5	1.3	6.2	1.8	6.7						
Naphthalene	ug/Kg						< 6.6	6.6	< 310	310	< 320	320	< 6.2	6.2	< 330	330						
n-Butylbenzene	ug/Kg	100,000	100,000	12,000			< 6.6	6.6	< 310	310	< 320	320	< 6.2	6.2	< 330	330						
n-Propylbenzene	ug/Kg	100,000	100,000	3,900			< 6.6	6.6	< 310	310	< 320	320	< 6.2	6.2	< 330	330						
o-Xylene	ug/Kg						< 6.6	6.6	< 6.2	6.2	< 6.5	6.5	< 6.2	6.2	< 6.7	6.7						
p-Isopropyltoluene	ug/Kg						< 6.6	6.6	< 310	310	< 320	320	< 6.2	6.2	< 330	330						
sec-Butylbenzene	ug/Kg	100,000	100,000	11,000			< 6.6	6.6	< 310	310	< 320	320	< 6.2	6.2	< 330	330						
Styrene	ug/Kg						< 6.6	6.6	< 6.2	6.2	< 6.5	6.5	< 6.2	6.2	< 6.7	6.7						
tert-Butylbenzene	ug/Kg	100,000	100,000	5,900			< 6.6	6.6	< 310	310	< 320	320	< 6.2	6.2	< 330	330						
Tetrachloroethene	ug/Kg	5,500	19,000	1,300			< 6.6	6.6	< 6.2	6.2	< 6.5	6.5	< 6.2	6.2	< 6.7	6.7						
Tetrahydrofuran (THF)	ug/Kg						< 13	13	< 12	12	< 13	13	< 12	12	< 13	13						
Toluene	ug/Kg	100,000	100,000	700			< 6.6	6.6	< 6.2	6.2	1.5	6.5	< 6.2	6.2	< 6.7	6.7						
trans-1,2-Dichloroethene	ug/Kg	100,000	100,000	190			< 6.6	6.6	< 6.2	6.2	< 6.5	6.5	< 6.2	6.2	< 6.7	6.7						
trans-1,3-Dichloropropene	ug/Kg						< 6.6	6.6	< 6.2	6.2	< 6.5	6.5	< 6.2	6.2	< 6.7	6.7						
trans-1,4-dichloro-2-butene	ug/Kg						< 13	13	< 620	620	< 650	650	< 12	12	< 670	670						
Trichloroethene	ug/Kg	10,000	21,000	470			< 6.6	6.6	< 6.2	6.2	< 6.5	6.5	< 6.2	6.2	< 6.7	6.7						
Trichlorofluoromethane	ug/Kg						< 6.6	6.6	< 6.2	6.2	< 6.5	6.5	< 6.2	6.2	< 6.7	6.7						
Trichlorotrifluoroethane	ug/Kg						< 6.6	6.6	< 6.2	6.2	< 6.5	6.5	< 6.2	6.2	< 6.7	6.7						
Vinyl chloride	ug/Kg	210	900	20			< 6.6	6.6	< 6.2	6.2	< 6.5	6.5	< 6.2	6.2	< 6.7	6.7						
Semivolatiles By SW 8270																						
1,2,4,5-Tetrachlorobenzene	ug/Kg						< 300	300	< 290	290	< 300	300	< 280	280	< 300	300						
1,2,4-Trichlorobenzene	ug/Kg						< 300	300	< 290	290	< 300	300	< 280	280	< 300	300						
1,2-Dichlorobenzene	ug/Kg						< 300	300	< 290	290	< 300	300	< 280	280	< 300	300						
1,2-Diphenylhydrazine	ug/Kg						< 300	300	< 290	290	< 300	300	< 280	280	< 300	300						
1,3-Dichlorobenzene	ug/Kg						< 300	300	< 290	290	< 300	300	< 280	280	< 300	300						
1,4-Dichlorobenzene	ug/Kg						< 300	300	< 290	290	< 300	300	< 280	280	< 300	300						
2,4,5-Trichlorophenol	ug/Kg						< 300	300	< 290	290	< 300	300	< 280	280	< 300	300						
2,4,6-Trichlorophenol	ug/Kg						< 300	300	< 290	290	< 300	300	< 280	280	< 300	300						
2,4-Dichlorophenol	ug/Kg						< 300	300	< 290	290	< 300	300	< 280	280	< 300	300						
2,4-Dimethylphenol	ug/Kg						< 300	300	< 290	290	< 300	300	< 280	280	< 300	300						
2,4-Dinitrophenol	ug/Kg						< 2200	2,200	< 2100	2,100	< 2100	2,100	< 2000	2,000	< 2200	2,200						
2,4-Dinitrotoluene	ug/Kg						< 300	300	< 290	290	< 300	300	< 280	280	< 300	300						
2,6-Dinitrotoluene	ug/Kg						< 300	300	< 290	290	< 300	300	< 280	280	< 300	300						
2-Chloronaphthalene	ug/Kg						< 300	300	< 290	290	< 300	300	< 280	280	< 300	300						

2-Chlorophenol	ug/Kg							< 300	300		< 290	290		< 300	300		< 280	280		< 300	300								
2-Methylnaphthalene	ug/Kg							< 300	300		< 290	290		< 300	300		< 280	280		< 300	300								
2-Methylphenol (o-cresol)	ug/Kg	100,000	100,000	330				< 300	300		< 290	290		< 300	300		< 280	280		< 300	300								
2-Nitroaniline	ug/Kg							< 2200	2,200		< 2100	2,100		< 2100	2,100		< 2000	2,000		< 2200	2,200								
2-Nitrophenol	ug/Kg							< 300	300		< 290	290		< 300	300		< 280	280		< 300	300								
3&4-Methylphenol (m&p-cresol)	ug/Kg							< 300	300		< 290	290		< 300	300		< 280	280		< 300	300								
3,3'-Dichlorobenzidine	ug/Kg							< 870	870		< 820	820		< 840	840		< 800	800		< 860	860								
3-Nitroaniline	ug/Kg							< 2200	2,200		< 2100	2,100		< 2100	2,100		< 2000	2,000		< 2200	2,200								
4,6-Dinitro-2-methylphenol	ug/Kg							< 2200	2,200		< 2100	2,100		< 2100	2,100		< 2000	2,000		< 2200	2,200								
4-Bromophenyl phenyl ether	ug/Kg							< 300	300		< 290	290		< 300	300		< 280	280		< 300	300								
4-Chloro-3-methylphenol	ug/Kg							< 300	300		< 290	290		< 300	300		< 280	280		< 300	300								
4-Chloroaniline	ug/Kg							< 870	870		< 820	820		< 840	840		< 800	800		< 860	860								
4-Chlorophenyl phenyl ether	ug/Kg							< 300	300		< 290	290		< 300	300		< 280	280		< 300	300								
4-Nitroaniline	ug/Kg							< 2200	2,200		< 2100	2,100		< 2100	2,100		< 2000	2,000		< 2200	2,200								
4-Nitrophenol	ug/Kg							< 2200	2,200		< 2100	2,100		< 2100	2,100		< 2000	2,000		< 2200	2,200								
Acenaphthene	ug/Kg	100,000	100,000	20,000				< 300	300		< 290	290		< 300	300		< 280	280		160	300								
Acenaphthylene	ug/Kg	100,000	100,000	100,000				< 300	300		< 290	290		< 300	300		< 280	280		< 300	300								
Acetophenone	ug/Kg							< 300	300		< 290	290		< 300	300		< 280	280		< 300	300								
Aniline	ug/Kg							< 2200	2,200		< 2100	2,100		< 2100	2,100		< 2000	2,000		< 2200	2,200								
Anthracene	ug/Kg	100,000	100,000	100,000				< 300	300		< 290	290		< 300	300		< 280	280		150	300								
Benz(a)anthracene	ug/Kg	1,000	1,000	1,000				< 300	300		200	290		< 300	300		< 280	280		220	300								
Benzidine	ug/Kg							< 870	870		< 820	820		< 840	840		< 800	800		< 860	860								
Benzo(a)pyrene	ug/Kg	1,000	1,000	1,000				< 300	300		170	290		< 300	300		< 280	280		190	300								
Benzo(b)fluoranthene	ug/Kg	1,000	1,000	1,000				< 300	300		210	290		< 300	300		< 280	280		220	300								
Benzo(ghi)perylene	ug/Kg	100,000	100,000	100,000				< 300	300		< 290	290		< 300	300		< 280	280		< 300	300								
Benzo(k)fluoranthene	ug/Kg	1,000	3,900	800				< 300	300		< 290	290		< 300	300		< 280	280		< 300	300								
Benzoic acid	ug/Kg							< 2200	2,200		< 2100	2,100		< 2100	2,100		< 2000	2,000		< 2200	2,200								
Benzyl butyl phthalate	ug/Kg							< 300	300		< 290	290		< 300	300		< 280	280		< 300	300								
Bis(2-chloroethoxy)methane	ug/Kg							< 300	300		< 290	290		< 300	300		< 280	280		< 300	300								
Bis(2-chloroethyl)ether	ug/Kg							< 300	300		< 290	290		< 300	300		< 280	280		< 300	300								
Bis(2-chloroisopropyl)ether	ug/Kg							< 300	300		< 290	290		< 300	300		< 280	280		< 300	300								
Bis(2-ethylhexyl)phthalate	ug/Kg							< 300	300		< 290	290		< 300	300		< 280	280		< 300	300								
Carbazole	ug/Kg							< 2200	2,200		< 2100	2,100		< 2100	2,100		< 2000	2,000		< 2200	2,200								
Chrysene	ug/Kg	1,000	3,900	1,000				< 300	300		210	290		< 300	300		< 280	280		210	300								
Dibenz(a,h)anthracene	ug/Kg	330	330	330				< 300	300		< 290	290		< 300	300		< 280	280		< 300	300								
Dibenzofuran	ug/Kg			7,000				< 300	300		< 290	290		< 300	300		< 280	280		130	300								
Diethyl phthalate	ug/Kg							< 300	300		< 290	290		< 300	300		< 280	280		< 300	300								
Dimethylphthalate	ug/Kg							< 300	300		< 290	290		< 300	300		< 280	280		< 300	300								
Di-n-butylphthalate	ug/Kg							< 300	300		< 290	290		< 300	300		< 280	280		< 300	300								
Di-n-octylphthalate	ug/Kg							< 300	300		< 290	290		< 300	300		< 280	280		< 300	300								
Fluoranthene	ug/Kg	100,000	100,000	100,000				< 300	300		440	290		140	300		< 280	280		630	300								
Fluorene	ug/Kg	100,000	100,000	30,000				< 300	300		< 290	290		< 300	300		< 280	280		160	300								
Hexachlorobenzene	ug/Kg							< 300	300		< 290	290		< 300	300		< 280	280		< 300	300								
Hexachlorobutadiene	ug/Kg							< 300	300		< 290	290		< 300	300		< 280	280		< 300	300								
Hexachlorocyclopentadiene	ug/Kg							< 300	300		< 290	290		< 300	300		< 280	280		< 300	300								
Hexachloroethane	ug/Kg							< 300	300		< 290	290		< 300	300		< 280	280		< 300	300								
Indeno(1,2,3-cd)pyrene	ug/Kg	500	500	500				< 300	300		< 290	290		< 300	300		< 280	280		< 300	300								
Isophorone	ug/Kg							< 300	300		< 290	290		< 300	300		< 280	280		< 300	300								
Naphthalene	ug/Kg	100,000	100,000	12,000				< 300	300		< 290	290		< 300	300		< 280	280		< 300	300								
Nitrobenzene	ug/Kg							< 300	300		< 290	290		< 300	300		< 280	280		< 300	300								
N-Nitrosodimethylamine	ug/Kg							< 300	300		< 290	290		< 300	300		< 280	280		< 300	300								
N-Nitrosodi-n-propylamine	ug/Kg							< 300	300		< 290	290		< 300	300		< 280	280		< 300	300								
N-Nitrosodiphenylamine	ug/Kg							< 300	300		< 290	290		< 300	300		< 280	280		< 300	300								
Pentachloronitrobenzene	ug/Kg							< 300	300		< 290	290		< 300	300		< 280	280		< 300	300								
Pentachlorophenol	ug/Kg	2,400	6,700	800				< 300	300		< 290	290		< 300	300		< 280	280		< 300	300								
Phenanthrene	ug/Kg	100,000	100,000	100,000				< 300	300		350	290		< 300	300		< 280	280		920	300								
Phenol	ug/Kg	100,000	100,000	330				< 300	300		< 290	290		< 300	300		< 280	280		< 300	300								
Pyrene	ug/Kg	100,000	100,000	100,000				< 300	300		400	290		< 300	300		< 280	280		580	300								
Pyridine	ug/Kg							< 300	300		< 290	290		< 300	300		< 280	280		< 300	300								

Result Detected

RL Exceeds Criteria

Result Exceeds Criteria

APPENDIX A
Laboratory Reports

Environmental Laboratories, Inc.
587 East Middle Turnpike, P.O.Box 370, Manchester, CT 06045
Tel. (860) 645-1102 Fax (860) 645-0823

NY # 11301

SDG Comments

August 04, 2014

SDG I.D.: GBG85525

8260 Volatile Organics:
1,2-Dibromoethane, 1,2,3 Trichloropropane, and 1,2-Dibromo-3-chloropropane do not meet NY TOGS GA criteria, these compounds are analyzed by GC/FID method 504 or 8011 to achieve this criteria.

Please be advised that the NY unrestricted soil criteria for chromium is based on hexavalent chromium and trivalent chromium.

BG85526 - Client provided soil jar for volatile analysis. Phoenix prepared sample per method 5035.

BG85528 - Client provided soil jar for volatile analysis. Phoenix prepared sample per method 5035.

BG85530 - Client provided soil jar for volatile analysis. Phoenix prepared sample per method 5035.

BG85532 - Client provided soil jar for volatile analysis. Phoenix prepared sample per method 5035.

BG85534 - Client provided soil jar for volatile analysis. Phoenix prepared sample per method 5035.

BG85535 - The pH in the preserved vial was greater than 2.

Environmental Laboratories, Inc.
587 East Middle Turnpike, P.O.Box 370, Manchester, CT 06045
Tel. (860) 645-1102 Fax (860) 645-0823

NY # 11301

Draft Progress Report

August 04, 2014

FOR: Attn: Mr. Charles B. Sosik, P.G.
Environmental Business Consultants
1808 Middle Country Rd
Ridge NY 11961-2406

Sample Information		Custody Information		Date	Time
Matrix:	SOIL	Collected by:		07/29/14	7:20
Location Code:	EBC	Received by:	LB	07/31/14	16:10
Rush Request:	72 Hour	Analyzed by:	see "By" below		
P.O.#:					

Laboratory Data

SDG ID: GBG85525
Phoenix ID: BG85525

Project ID: 526 UNION AVE., BROOKLYN
Client ID: B1 0-2

Parameter	Result	RL/ PQL	Units	Date/Time	By	Reference	
Silver	< 0.33	0.33	mg/Kg	08/03/14	LK	SW6010	
Aluminum	7360	33	mg/Kg	08/02/14	LK	SW6010	
Arsenic	2.6	0.7	mg/Kg	08/03/14	LK	SW6010	
Barium	56.0	0.7	mg/Kg	08/03/14	LK	SW6010	
Beryllium	0.47	0.26	mg/Kg	08/03/14	LK	SW6010	
Calcium	1520	3.3	mg/Kg	08/03/14	LK	SW6010	
Cadmium	0.70	0.33	mg/Kg	08/03/14	LK	SW6010	
Cobalt	8.04	0.33	mg/Kg	08/03/14	LK	SW6010	
Chromium	21.1	0.33	mg/Kg	08/03/14	LK	SW6010	
Copper	33.1	0.33	mg/kg	08/03/14	LK	SW6010	
Iron	19500	33	mg/Kg	08/02/14	LK	SW6010	
Mercury	0.27	0.07	mg/Kg	08/01/14	MA	SW-7471	
Potassium	1320	7	mg/Kg	08/03/14	LK	SW6010	
Magnesium	2320	3.3	mg/Kg	08/03/14	LK	SW6010	
Manganese	232	3.3	mg/Kg	08/02/14	LK	SW6010	
Sodium	101	7	mg/Kg	08/03/14	LK	SW6010	
Nickel	14.4	0.33	mg/Kg	08/03/14	LK	SW6010	
Lead	108	0.7	mg/Kg	08/03/14	LK	SW6010	
Antimony	< 1.6	1.6	mg/Kg	08/03/14	LK	SW6010	
Selenium	< 1.3	1.3	mg/Kg	08/03/14	LK	SW6010	
TCLP Silver	< 0.10	0.10	mg/L	08/03/14	LK	SW6010	
TCLP Arsenic	< 0.10	0.10	mg/L	08/03/14	LK	SW6010	
TCLP Barium	< 0.10	0.10	mg/L	08/03/14	LK	SW6010	B
TCLP Cadmium	< 0.050	0.050	mg/L	08/03/14	LK	SW6010	
TCLP Chromium	1.25	0.10	mg/L	08/03/14	LK	SW6010	
TCLP Mercury	< 0.0002	0.0002	mg/L	08/01/14	MA	SW7470	
TCLP Lead	< 0.10	0.10	mg/L	08/03/14	LK	SW6010	
TCLP Selenium	< 0.10	0.10	mg/L	08/03/14	LK	SW6010	

Project ID: 526 UNION AVE., BROOKLYN
Client ID: B1 0-2

Phoenix I.D.: BG85525

Parameter	Result	RL/ PQL	Units	Date/Time	By	Reference
Thallium	< 1.3	1.3	mg/Kg	08/03/14	LK	SW6010
TCLP Metals Digestion	Completed			08/01/14	I/I	SW3005
Vanadium	28.8	0.3	mg/Kg	08/03/14	LK	SW6010
Zinc	75.8	0.7	mg/Kg	08/03/14	LK	SW6010
Percent Solid	94		%	07/31/14	I	E160.3
Mercury Digestion	Completed			08/01/14	I/I	SW7471
TCLP Digestion Mercury	Completed			08/01/14	I/I	E1311/7470
TCLP Extraction for Metals	Completed			07/31/14	I	EPA 1311
Total Metals Digest	Completed			07/31/14	CB/AG	SW846 - 3050

B = Present in blank, no bias suspected.

RL/PQL=Reporting/Practical Quantitation Level (Equivalent to NELAC LOQ, Limit of Quanitation) ND=Not Detected
BRL=Below Reporting Level

Comments:

Please be advised that the NY unrestricted soil criteria for chromium is based on hexavalent chromium and trivalent chromium.

All soils, solids and sludges are reported on a dry weight basis unless otherwise noted in the sample comments.

If there are any questions regarding this data, please call Phoenix Client Services at extension 200.
This report must not be reproduced except in full as defined by the attached chain of custody.

PLEASE NOTE: THIS PROGRESS REPORT IS CONSIDERED PRELIMINARY DATA. THE RESULTS ENTERED HAVE NOT BEEN EXAMINED BY OUR QA/QC DEPARTMENT.

Phyllis Shiller, Laboratory Director
August 04, 2014

PHOENIX

Environmental Laboratories, Inc.
587 East Middle Turnpike, P.O.Box 370, Manchester, CT 06045
Tel. (860) 645-1102 Fax (860) 645-0823

ACCREDITED IN ACCORDANCE WITH nelac NY # 11301

Draft Progress Report

August 04, 2014

FOR: Attn: Mr. Charles B. Sosik, P.G.
Environmental Business Consultants
1808 Middle Country Rd
Ridge NY 11961-2406

Sample Information		Custody Information		Date	Time
Matrix:	SOIL	Collected by:		07/29/14	7:40
Location Code:	EBC	Received by:	LB	07/31/14	16:10
Rush Request:	72 Hour	Analyzed by:	see "By" below		
P.O.#:					

Laboratory Data

SDG ID: GBG85525
Phoenix ID: BG85526

Project ID: 526 UNION AVE., BROOKLYN
Client ID: B1 8-10

Parameter	Result	RL/ PQL	LOD/ MDL	Units	Date/Time	By	Reference	
Percent Solid	76			%	07/31/14	I	E160.3	
Soil Extraction for SVOA	Completed				07/31/14	JJ/HF	SW3545	
Volatiles								
Volatiles	Pending			ug/Kg	08/01/14	JLI	SW8260	
Semivolatiles								
1,2,4,5-Tetrachlorobenzene	ND	300	150	ug/Kg	08/01/14	DD	SW 8270	
1,2,4-Trichlorobenzene	ND	300	130	ug/Kg	08/01/14	DD	SW 8270	
1,2-Dichlorobenzene	ND	300	120	ug/Kg	08/01/14	DD	SW 8270	
1,2-Diphenylhydrazine	ND	300	140	ug/Kg	08/01/14	DD	SW 8270	
1,3-Dichlorobenzene	ND	300	130	ug/Kg	08/01/14	DD	SW 8270	
1,4-Dichlorobenzene	ND	300	130	ug/Kg	08/01/14	DD	SW 8270	
2,4,5-Trichlorophenol	ND	300	240	ug/Kg	08/01/14	DD	SW 8270	
2,4,6-Trichlorophenol	ND	300	140	ug/Kg	08/01/14	DD	SW 8270	
2,4-Dichlorophenol	ND	300	150	ug/Kg	08/01/14	DD	SW 8270	
2,4-Dimethylphenol	ND	300	110	ug/Kg	08/01/14	DD	SW 8270	
2,4-Dinitrophenol	ND	2200	300	ug/Kg	08/01/14	DD	SW 8270	
2,4-Dinitrotoluene	ND	300	170	ug/Kg	08/01/14	DD	SW 8270	
2,6-Dinitrotoluene	ND	300	140	ug/Kg	08/01/14	DD	SW 8270	
2-Chloronaphthalene	ND	300	120	ug/Kg	08/01/14	DD	SW 8270	
2-Chlorophenol	ND	300	120	ug/Kg	08/01/14	DD	SW 8270	
2-Methylnaphthalene	ND	300	130	ug/Kg	08/01/14	DD	SW 8270	
2-Methylphenol (o-cresol)	ND	300	200	ug/Kg	08/01/14	DD	SW 8270	
2-Nitroaniline	ND	2200	440	ug/Kg	08/01/14	DD	SW 8270	
2-Nitrophenol	ND	300	280	ug/Kg	08/01/14	DD	SW 8270	
3&4-Methylphenol (m&p-cresol)	ND	300	170	ug/Kg	08/01/14	DD	SW 8270	1
3,3'-Dichlorobenzidine	ND	870	210	ug/Kg	08/01/14	DD	SW 8270	

Project ID: 526 UNION AVE., BROOKLYN
Client ID: B1 8-10

Phoenix I.D.: BG85526

Parameter	Result	RL/ PQL	LOD/ MDL	Units	Date/Time	By	Reference	
3-Nitroaniline	ND	2200	950	ug/Kg	08/01/14	DD	SW 8270	
4,6-Dinitro-2-methylphenol	ND	2200	470	ug/Kg	08/01/14	DD	SW 8270	
4-Bromophenyl phenyl ether	ND	300	130	ug/Kg	08/01/14	DD	SW 8270	
4-Chloro-3-methylphenol	ND	300	150	ug/Kg	08/01/14	DD	SW 8270	
4-Chloroaniline	ND	870	200	ug/Kg	08/01/14	DD	SW 8270	
4-Chlorophenyl phenyl ether	ND	300	150	ug/Kg	08/01/14	DD	SW 8270	
4-Nitroaniline	ND	2200	150	ug/Kg	08/01/14	DD	SW 8270	
4-Nitrophenol	ND	2200	200	ug/Kg	08/01/14	DD	SW 8270	
Acenaphthene	ND	300	130	ug/Kg	08/01/14	DD	SW 8270	
Acenaphthylene	ND	300	120	ug/Kg	08/01/14	DD	SW 8270	
Acetophenone	ND	300	140	ug/Kg	08/01/14	DD	SW 8270	
Aniline	ND	2200	880	ug/Kg	08/01/14	DD	SW 8270	
Anthracene	ND	300	140	ug/Kg	08/01/14	DD	SW 8270	
Benz(a)anthracene	ND	300	150	ug/Kg	08/01/14	DD	SW 8270	
Benzidine	ND	870	260	ug/Kg	08/01/14	DD	SW 8270	
Benzo(a)pyrene	ND	300	140	ug/Kg	08/01/14	DD	SW 8270	
Benzo(b)fluoranthene	ND	300	150	ug/Kg	08/01/14	DD	SW 8270	
Benzo(ghi)perylene	ND	300	140	ug/Kg	08/01/14	DD	SW 8270	
Benzo(k)fluoranthene	ND	300	140	ug/Kg	08/01/14	DD	SW 8270	
Benzoic acid	ND	2200	870	ug/Kg	08/01/14	DD	SW 8270	1
Benzyl butyl phthalate	ND	300	110	ug/Kg	08/01/14	DD	SW 8270	
Bis(2-chloroethoxy)methane	ND	300	120	ug/Kg	08/01/14	DD	SW 8270	
Bis(2-chloroethyl)ether	ND	300	120	ug/Kg	08/01/14	DD	SW 8270	
Bis(2-chloroisopropyl)ether	ND	300	120	ug/Kg	08/01/14	DD	SW 8270	1
Bis(2-ethylhexyl)phthalate	ND	300	130	ug/Kg	08/01/14	DD	SW 8270	
Carbazole	ND	2200	330	ug/Kg	08/01/14	DD	SW 8270	
Chrysene	ND	300	150	ug/Kg	08/01/14	DD	SW 8270	
Dibenz(a,h)anthracene	ND	300	140	ug/Kg	08/01/14	DD	SW 8270	
Dibenzofuran	ND	300	130	ug/Kg	08/01/14	DD	SW 8270	
Diethyl phthalate	ND	300	140	ug/Kg	08/01/14	DD	SW 8270	
Dimethylphthalate	ND	300	130	ug/Kg	08/01/14	DD	SW 8270	
Di-n-butylphthalate	ND	300	120	ug/Kg	08/01/14	DD	SW 8270	
Di-n-octylphthalate	ND	300	110	ug/Kg	08/01/14	DD	SW 8270	
Fluoranthene	ND	300	140	ug/Kg	08/01/14	DD	SW 8270	
Fluorene	ND	300	140	ug/Kg	08/01/14	DD	SW 8270	
Hexachlorobenzene	ND	300	130	ug/Kg	08/01/14	DD	SW 8270	
Hexachlorobutadiene	ND	300	160	ug/Kg	08/01/14	DD	SW 8270	
Hexachlorocyclopentadiene	ND	300	130	ug/Kg	08/01/14	DD	SW 8270	
Hexachloroethane	ND	300	130	ug/Kg	08/01/14	DD	SW 8270	
Indeno(1,2,3-cd)pyrene	ND	300	140	ug/Kg	08/01/14	DD	SW 8270	
Isophorone	ND	300	120	ug/Kg	08/01/14	DD	SW 8270	
Naphthalene	ND	300	130	ug/Kg	08/01/14	DD	SW 8270	
Nitrobenzene	ND	300	150	ug/Kg	08/01/14	DD	SW 8270	
N-Nitrosodimethylamine	ND	300	120	ug/Kg	08/01/14	DD	SW 8270	
N-Nitrosodi-n-propylamine	ND	300	140	ug/Kg	08/01/14	DD	SW 8270	
N-Nitrosodiphenylamine	ND	300	170	ug/Kg	08/01/14	DD	SW 8270	
Pentachloronitrobenzene	ND	300	160	ug/Kg	08/01/14	DD	SW 8270	
Pentachlorophenol	ND	300	160	ug/Kg	08/01/14	DD	SW 8270	
Phenanthrene	ND	300	120	ug/Kg	08/01/14	DD	SW 8270	

Project ID: 526 UNION AVE., BROOKLYN
Client ID: B1 8-10

Phoenix I.D.: BG85526

Parameter	Result	RL/ PQL	LOD/ MDL	Units	Date/Time	By	Reference
Phenol	ND	300	140	ug/Kg	08/01/14	DD	SW 8270
Pyrene	ND	300	150	ug/Kg	08/01/14	DD	SW 8270
Pyridine	ND	300	110	ug/Kg	08/01/14	DD	SW 8270
QA/QC Surrogates							
% 2,4,6-Tribromophenol	83			%	08/01/14	DD	30 - 130 %
% 2-Fluorobiphenyl	65			%	08/01/14	DD	30 - 130 %
% 2-Fluorophenol	69			%	08/01/14	DD	30 - 130 %
% Nitrobenzene-d5	67			%	08/01/14	DD	30 - 130 %
% Phenol-d5	74			%	08/01/14	DD	30 - 130 %
% Terphenyl-d14	89			%	08/01/14	DD	30 - 130 %

1 = This parameter is not certified by NY NELAC for this matrix. NY NELAC does not offer certification for all parameters at this time.

RL/PQL=Reporting/Practical Quantitation Level (Equivalent to NELAC LOQ, Limit of Quanitation) ND=Not Detected
BRL=Below Reporting Level LOD=Limit of Detection MDL=Method Detection Limit

Comments:

Per 1.4.6 of EPA method 8270D, 1,2-Diphenylhydrazine is unstable and readily converts to Azobenzene. Azobenzene is used for the calibration of 1,2-Diphenylhydrazine.

This sample was not collected in accordance with EPA method 5035. NELAC requires the laboratory to qualify the volatile soil data as biased low.

All soils, solids and sludges are reported on a dry weight basis unless otherwise noted in the sample comments.

If there are any questions regarding this data, please call Phoenix Client Services at extension 200.
This report must not be reproduced except in full as defined by the attached chain of custody.

PLEASE NOTE: THIS PROGRESS REPORT IS CONSIDERED PRELIMINARY DATA. THE RESULTS ENTERED HAVE NOT BEEN EXAMINED BY OUR QA/QC DEPARTMENT.

Phyllis Shiller, Laboratory Director
August 04, 2014

PHOENIX

Environmental Laboratories, Inc.
587 East Middle Turnpike, P.O.Box 370, Manchester, CT 06045
Tel. (860) 645-1102 Fax (860) 645-0823

ACCREDITED IN ACCORDANCE WITH nelac NY # 11301

Draft Progress Report

August 04, 2014

FOR: Attn: Mr. Charles B. Sosik, P.G.
Environmental Business Consultants
1808 Middle Country Rd
Ridge NY 11961-2406

Sample Information		Custody Information		Date	Time
Matrix:	SOIL	Collected by:		07/29/14	8:00
Location Code:	EBC	Received by:	LB	07/31/14	16:10
Rush Request:	72 Hour	Analyzed by:	see "By" below		
P.O.#:					

Laboratory Data

SDG ID: GBG85525
Phoenix ID: BG85527

Project ID: 526 UNION AVE., BROOKLYN
Client ID: B2 3-5

Parameter	Result	RL/ PQL	Units	Date/Time	By	Reference	
Silver	< 0.33	0.33	mg/Kg	08/03/14	LK	SW6010	
Aluminum	5040	33	mg/Kg	08/02/14	LK	SW6010	
Arsenic	4.3	0.7	mg/Kg	08/03/14	LK	SW6010	
Barium	76.6	0.7	mg/Kg	08/03/14	LK	SW6010	
Beryllium	0.38	0.26	mg/Kg	08/03/14	LK	SW6010	
Calcium	2100	3.3	mg/Kg	08/03/14	LK	SW6010	
Cadmium	0.60	0.33	mg/Kg	08/03/14	LK	SW6010	
Cobalt	4.82	0.33	mg/Kg	08/03/14	LK	SW6010	
Chromium	23.9	0.33	mg/Kg	08/03/14	LK	SW6010	
Copper	12.0	0.33	mg/kg	08/03/14	LK	SW6010	
Iron	13900	33	mg/Kg	08/02/14	LK	SW6010	
Mercury	0.53	0.06	mg/Kg	08/01/14	MA	SW-7471	
Potassium	1460	7	mg/Kg	08/03/14	LK	SW6010	
Magnesium	1050	3.3	mg/Kg	08/03/14	LK	SW6010	
Manganese	127	3.3	mg/Kg	08/02/14	LK	SW6010	
Sodium	109	7	mg/Kg	08/03/14	LK	SW6010	
Nickel	15.5	0.33	mg/Kg	08/03/14	LK	SW6010	
Lead	166	6.6	mg/Kg	08/02/14	LK	SW6010	
Antimony	< 1.7	1.7	mg/Kg	08/03/14	LK	SW6010	
Selenium	< 1.3	1.3	mg/Kg	08/03/14	LK	SW6010	
TCLP Silver	< 0.10	0.10	mg/L	08/03/14	LK	SW6010	
TCLP Arsenic	< 0.10	0.10	mg/L	08/03/14	LK	SW6010	
TCLP Barium	0.30	0.10	mg/L	08/03/14	LK	SW6010	B
TCLP Cadmium	< 0.050	0.050	mg/L	08/03/14	LK	SW6010	
TCLP Chromium	< 0.10	0.10	mg/L	08/03/14	LK	SW6010	
TCLP Mercury	< 0.0002	0.0002	mg/L	08/01/14	MA	SW7470	
TCLP Lead	0.17	0.10	mg/L	08/03/14	LK	SW6010	
TCLP Selenium	< 0.10	0.10	mg/L	08/03/14	LK	SW6010	

Project ID: 526 UNION AVE., BROOKLYN
Client ID: B2 3-5

Phoenix I.D.: BG85527

Parameter	Result	RL/ PQL	Units	Date/Time	By	Reference
Thallium	< 1.3	1.3	mg/Kg	08/03/14	LK	SW6010
TCLP Metals Digestion	Completed			08/01/14	I/I	SW3005
Vanadium	17.8	0.3	mg/Kg	08/03/14	LK	SW6010
Zinc	417	6.6	mg/Kg	08/02/14	LK	SW6010
Percent Solid	89		%	07/31/14	I	E160.3
Mercury Digestion	Completed			08/01/14	I/I	SW7471
TCLP Digestion Mercury	Completed			08/01/14	I/I	E1311/7470
TCLP Extraction for Metals	Completed			07/31/14	I	EPA 1311
Total Metals Digest	Completed			07/31/14	CB/AG	SW846 - 3050

B = Present in blank, no bias suspected.

RL/PQL=Reporting/Practical Quantitation Level (Equivalent to NELAC LOQ, Limit of Quanitation) ND=Not Detected
BRL=Below Reporting Level

Comments:

Please be advised that the NY unrestricted soil criteria for chromium is based on hexavalent chromium and trivalent chromium.

All soils, solids and sludges are reported on a dry weight basis unless otherwise noted in the sample comments.

If there are any questions regarding this data, please call Phoenix Client Services at extension 200.
This report must not be reproduced except in full as defined by the attached chain of custody.

PLEASE NOTE: THIS PROGRESS REPORT IS CONSIDERED PRELIMINARY DATA. THE RESULTS ENTERED HAVE NOT BEEN EXAMINED BY OUR QA/QC DEPARTMENT.

Phyllis Shiller, Laboratory Director
August 04, 2014

Environmental Laboratories, Inc.
587 East Middle Turnpike, P.O.Box 370, Manchester, CT 06045
Tel. (860) 645-1102 Fax (860) 645-0823

NY # 11301

Draft Progress Report

August 04, 2014

FOR: Attn: Mr. Charles B. Sosik, P.G.
Environmental Business Consultants
1808 Middle Country Rd
Ridge NY 11961-2406

Sample Information		Custody Information		Date	Time
Matrix:	SOIL	Collected by:		07/29/14	8:20
Location Code:	EBC	Received by:	LB	07/31/14	16:10
Rush Request:	72 Hour	Analyzed by:	see "By" below		
P.O.#:					

Laboratory Data

SDG ID: GBG85525
Phoenix ID: BG85528

Project ID: 526 UNION AVE., BROOKLYN
Client ID: B2 8-10

Parameter	Result	RL/ PQL	LOD/ MDL	Units	Date/Time	By	Reference	
Percent Solid	81			%	07/31/14	I	E160.3	
Soil Extraction for SVOA	Completed				07/31/14	JJ/HF	SW3545	
Volatiles								
1,1,1,2-Tetrachloroethane	ND	6.2	1.0	ug/Kg	08/01/14	JLI	SW8260	
1,1,1-Trichloroethane	ND	6.2	1.2	ug/Kg	08/01/14	JLI	SW8260	
1,1,2,2-Tetrachloroethane	ND	6.2	0.88	ug/Kg	08/01/14	JLI	SW8260	
1,1,2-Trichloroethane	ND	6.2	0.60	ug/Kg	08/01/14	JLI	SW8260	
1,1-Dichloroethane	ND	6.2	1.2	ug/Kg	08/01/14	JLI	SW8260	
1,1-Dichloroethene	ND	6.2	1.3	ug/Kg	08/01/14	JLI	SW8260	
1,1-Dichloropropene	ND	6.2	1.2	ug/Kg	08/01/14	JLI	SW8260	
1,2,3-Trichlorobenzene	ND	310	62	ug/Kg	08/02/14	JLI	SW8260	
1,2,3-Trichloropropane	ND	310	44	ug/Kg	08/02/14	JLI	SW8260	
1,2,4-Trichlorobenzene	ND	310	62	ug/Kg	08/02/14	JLI	SW8260	
1,2,4-Trimethylbenzene	ND	310	44	ug/Kg	08/02/14	JLI	SW8260	
1,2-Dibromo-3-chloropropane	ND	310	83	ug/Kg	08/02/14	JLI	SW8260	
1,2-Dibromoethane	ND	6.2	1.6	ug/Kg	08/01/14	JLI	SW8260	
1,2-Dichlorobenzene	ND	310	34	ug/Kg	08/02/14	JLI	SW8260	
1,2-Dichloroethane	ND	6.2	0.54	ug/Kg	08/01/14	JLI	SW8260	
1,2-Dichloropropane	ND	6.2	0.88	ug/Kg	08/01/14	JLI	SW8260	
1,3,5-Trimethylbenzene	ND	310	41	ug/Kg	08/02/14	JLI	SW8260	
1,3-Dichlorobenzene	ND	310	46	ug/Kg	08/02/14	JLI	SW8260	
1,3-Dichloropropane	ND	6.2	0.65	ug/Kg	08/01/14	JLI	SW8260	
1,4-Dichlorobenzene	ND	310	49	ug/Kg	08/02/14	JLI	SW8260	
2,2-Dichloropropane	ND	6.2	1.0	ug/Kg	08/01/14	JLI	SW8260	
2-Chlorotoluene	ND	310	49	ug/Kg	08/02/14	JLI	SW8260	
2-Hexanone	ND	31	2.8	ug/Kg	08/01/14	JLI	SW8260	
2-Isopropyltoluene	ND	310	43	ug/Kg	08/02/14	JLI	SW8260	1

Project ID: 526 UNION AVE., BROOKLYN
Client ID: B2 8-10

Phoenix I.D.: BG85528

Parameter	Result		RL/ PQL	LOD/ MDL	Units	Date/Time	By	Reference	
4-Chlorotoluene	ND		310	36	ug/Kg	08/02/14	JLI	SW8260	
4-Methyl-2-pentanone	ND		31	1.5	ug/Kg	08/01/14	JLI	SW8260	
Acetone	190	S	62	6.1	ug/Kg	08/01/14	JLI	SW8260	
Acrylonitrile	ND		12	3.5	ug/Kg	08/01/14	JLI	SW8260	
Benzene	ND		6.2	1.2	ug/Kg	08/01/14	JLI	SW8260	
Bromobenzene	ND		310	40	ug/Kg	08/02/14	JLI	SW8260	
Bromochloromethane	ND		6.2	0.90	ug/Kg	08/01/14	JLI	SW8260	
Bromodichloromethane	ND		6.2	0.77	ug/Kg	08/01/14	JLI	SW8260	
Bromoform	ND		6.2	0.86	ug/Kg	08/01/14	JLI	SW8260	
Bromomethane	ND		6.2	4.8	ug/Kg	08/01/14	JLI	SW8260	
Carbon Disulfide	2.6	J	6.2	1.0	ug/Kg	08/01/14	JLI	SW8260	
Carbon tetrachloride	ND		6.2	0.72	ug/Kg	08/01/14	JLI	SW8260	
Chlorobenzene	ND		6.2	0.91	ug/Kg	08/01/14	JLI	SW8260	
Chloroethane	ND		6.2	1.4	ug/Kg	08/01/14	JLI	SW8260	
Chloroform	ND		6.2	1.1	ug/Kg	08/01/14	JLI	SW8260	
Chloromethane	ND		6.2	3.2	ug/Kg	08/01/14	JLI	SW8260	
cis-1,2-Dichloroethene	ND		6.2	1.3	ug/Kg	08/01/14	JLI	SW8260	
cis-1,3-Dichloropropene	ND		6.2	0.67	ug/Kg	08/01/14	JLI	SW8260	
Dibromochloromethane	ND		6.2	0.69	ug/Kg	08/01/14	JLI	SW8260	
Dibromomethane	ND		6.2	0.78	ug/Kg	08/01/14	JLI	SW8260	
Dichlorodifluoromethane	ND		6.2	1.6	ug/Kg	08/01/14	JLI	SW8260	
Ethylbenzene	ND		6.2	1.1	ug/Kg	08/01/14	JLI	SW8260	
Hexachlorobutadiene	ND		310	65	ug/Kg	08/02/14	JLI	SW8260	
Isopropylbenzene	ND		310	59	ug/Kg	08/02/14	JLI	SW8260	
m&p-Xylene	ND		6.2	2.4	ug/Kg	08/01/14	JLI	SW8260	
Methyl Ethyl Ketone	47		37	5.4	ug/Kg	08/01/14	JLI	SW8260	
Methyl t-butyl ether (MTBE)	ND		12	1.7	ug/Kg	08/01/14	JLI	SW8260	
Methylene chloride	1.7	JS	6.2	1.0	ug/Kg	08/01/14	JLI	SW8260	
Naphthalene	ND		310	83	ug/Kg	08/02/14	JLI	SW8260	
n-Butylbenzene	ND		310	56	ug/Kg	08/02/14	JLI	SW8260	
n-Propylbenzene	ND		310	56	ug/Kg	08/02/14	JLI	SW8260	
o-Xylene	ND		6.2	2.4	ug/Kg	08/01/14	JLI	SW8260	
p-Isopropyltoluene	ND		310	44	ug/Kg	08/02/14	JLI	SW8260	
sec-Butylbenzene	ND		310	58	ug/Kg	08/02/14	JLI	SW8260	
Styrene	ND		6.2	1.8	ug/Kg	08/01/14	JLI	SW8260	
tert-Butylbenzene	ND		310	49	ug/Kg	08/02/14	JLI	SW8260	
Tetrachloroethene	ND		6.2	1.3	ug/Kg	08/01/14	JLI	SW8260	
Tetrahydrofuran (THF)	ND		12	5.6	ug/Kg	08/01/14	JLI	SW8260	1
Toluene	ND		6.2	0.98	ug/Kg	08/01/14	JLI	SW8260	
trans-1,2-Dichloroethene	ND		6.2	1.2	ug/Kg	08/01/14	JLI	SW8260	
trans-1,3-Dichloropropene	ND		6.2	1.3	ug/Kg	08/01/14	JLI	SW8260	
trans-1,4-dichloro-2-butene	ND		620	570	ug/Kg	08/02/14	JLI	SW8260	
Trichloroethene	ND		6.2	1.3	ug/Kg	08/01/14	JLI	SW8260	
Trichlorofluoromethane	ND		6.2	1.4	ug/Kg	08/01/14	JLI	SW8260	
Trichlorotrifluoroethane	ND		6.2	0.96	ug/Kg	08/01/14	JLI	SW8260	
Vinyl chloride	ND		6.2	2.0	ug/Kg	08/01/14	JLI	SW8260	
QA/QC Surrogates									
% 1,2-dichlorobenzene-d4	103				%	08/02/14	JLI	70 - 130 %	
% Bromofluorobenzene	79				%	08/02/14	JLI	70 - 130 %	

Parameter	Result		RL/ PQL	LOD/ MDL	Units	Date/Time	By	Reference	
% Dibromofluoromethane	96				%	08/01/14	JLI	70 - 130 %	
% Toluene-d8	95				%	08/01/14	JLI	70 - 130 %	
Semivolatiles									
1,2,4,5-Tetrachlorobenzene	ND		290	140	ug/Kg	08/01/14	DD	SW 8270	
1,2,4-Trichlorobenzene	ND		290	120	ug/Kg	08/01/14	DD	SW 8270	
1,2-Dichlorobenzene	ND		290	120	ug/Kg	08/01/14	DD	SW 8270	
1,2-Diphenylhydrazine	ND		290	130	ug/Kg	08/01/14	DD	SW 8270	
1,3-Dichlorobenzene	ND		290	120	ug/Kg	08/01/14	DD	SW 8270	
1,4-Dichlorobenzene	ND		290	120	ug/Kg	08/01/14	DD	SW 8270	
2,4,5-Trichlorophenol	ND		290	220	ug/Kg	08/01/14	DD	SW 8270	
2,4,6-Trichlorophenol	ND		290	130	ug/Kg	08/01/14	DD	SW 8270	
2,4-Dichlorophenol	ND		290	140	ug/Kg	08/01/14	DD	SW 8270	
2,4-Dimethylphenol	ND		290	100	ug/Kg	08/01/14	DD	SW 8270	
2,4-Dinitrophenol	ND		2100	290	ug/Kg	08/01/14	DD	SW 8270	
2,4-Dinitrotoluene	ND		290	160	ug/Kg	08/01/14	DD	SW 8270	
2,6-Dinitrotoluene	ND		290	130	ug/Kg	08/01/14	DD	SW 8270	
2-Chloronaphthalene	ND		290	120	ug/Kg	08/01/14	DD	SW 8270	
2-Chlorophenol	ND		290	120	ug/Kg	08/01/14	DD	SW 8270	
2-Methylnaphthalene	ND		290	120	ug/Kg	08/01/14	DD	SW 8270	
2-Methylphenol (o-cresol)	ND		290	190	ug/Kg	08/01/14	DD	SW 8270	
2-Nitroaniline	ND		2100	410	ug/Kg	08/01/14	DD	SW 8270	
2-Nitrophenol	ND		290	260	ug/Kg	08/01/14	DD	SW 8270	
3&4-Methylphenol (m&p-cresol)	ND		290	160	ug/Kg	08/01/14	DD	SW 8270	1
3,3'-Dichlorobenzidine	ND		820	190	ug/Kg	08/01/14	DD	SW 8270	
3-Nitroaniline	ND		2100	890	ug/Kg	08/01/14	DD	SW 8270	
4,6-Dinitro-2-methylphenol	ND		2100	440	ug/Kg	08/01/14	DD	SW 8270	
4-Bromophenyl phenyl ether	ND		290	120	ug/Kg	08/01/14	DD	SW 8270	
4-Chloro-3-methylphenol	ND		290	140	ug/Kg	08/01/14	DD	SW 8270	
4-Chloroaniline	ND		820	190	ug/Kg	08/01/14	DD	SW 8270	
4-Chlorophenyl phenyl ether	ND		290	140	ug/Kg	08/01/14	DD	SW 8270	
4-Nitroaniline	ND		2100	140	ug/Kg	08/01/14	DD	SW 8270	
4-Nitrophenol	ND		2100	190	ug/Kg	08/01/14	DD	SW 8270	
Acenaphthene	ND		290	120	ug/Kg	08/01/14	DD	SW 8270	
Acenaphthylene	ND		290	110	ug/Kg	08/01/14	DD	SW 8270	
Acetophenone	ND		290	130	ug/Kg	08/01/14	DD	SW 8270	
Aniline	ND		2100	830	ug/Kg	08/01/14	DD	SW 8270	
Anthracene	ND		290	130	ug/Kg	08/01/14	DD	SW 8270	
Benz(a)anthracene	200	J	290	140	ug/Kg	08/01/14	DD	SW 8270	
Benzidine	ND		820	240	ug/Kg	08/01/14	DD	SW 8270	
Benzo(a)pyrene	170	J	290	130	ug/Kg	08/01/14	DD	SW 8270	
Benzo(b)fluoranthene	210	J	290	140	ug/Kg	08/01/14	DD	SW 8270	
Benzo(ghi)perylene	ND		290	130	ug/Kg	08/01/14	DD	SW 8270	
Benzo(k)fluoranthene	ND		290	140	ug/Kg	08/01/14	DD	SW 8270	
Benzoic acid	ND		2100	820	ug/Kg	08/01/14	DD	SW 8270	1
Benzyl butyl phthalate	ND		290	110	ug/Kg	08/01/14	DD	SW 8270	
Bis(2-chloroethoxy)methane	ND		290	110	ug/Kg	08/01/14	DD	SW 8270	
Bis(2-chloroethyl)ether	ND		290	110	ug/Kg	08/01/14	DD	SW 8270	
Bis(2-chloroisopropyl)ether	ND		290	110	ug/Kg	08/01/14	DD	SW 8270	1
Bis(2-ethylhexyl)phthalate	ND		290	120	ug/Kg	08/01/14	DD	SW 8270	

Project ID: 526 UNION AVE., BROOKLYN
Client ID: B2 8-10

Phoenix I.D.: BG85528

Parameter	Result		RL/ PQL	LOD/ MDL	Units	Date/Time	By	Reference
Carbazole	ND		2100	310	ug/Kg	08/01/14	DD	SW 8270
Chrysene	210	J	290	140	ug/Kg	08/01/14	DD	SW 8270
Dibenz(a,h)anthracene	ND		290	130	ug/Kg	08/01/14	DD	SW 8270
Dibenzofuran	ND		290	120	ug/Kg	08/01/14	DD	SW 8270
Diethyl phthalate	ND		290	130	ug/Kg	08/01/14	DD	SW 8270
Dimethylphthalate	ND		290	130	ug/Kg	08/01/14	DD	SW 8270
Di-n-butylphthalate	ND		290	110	ug/Kg	08/01/14	DD	SW 8270
Di-n-octylphthalate	ND		290	110	ug/Kg	08/01/14	DD	SW 8270
Fluoranthene	440		290	130	ug/Kg	08/01/14	DD	SW 8270
Fluorene	ND		290	140	ug/Kg	08/01/14	DD	SW 8270
Hexachlorobenzene	ND		290	120	ug/Kg	08/01/14	DD	SW 8270
Hexachlorobutadiene	ND		290	150	ug/Kg	08/01/14	DD	SW 8270
Hexachlorocyclopentadiene	ND		290	130	ug/Kg	08/01/14	DD	SW 8270
Hexachloroethane	ND		290	120	ug/Kg	08/01/14	DD	SW 8270
Indeno(1,2,3-cd)pyrene	ND		290	140	ug/Kg	08/01/14	DD	SW 8270
Isophorone	ND		290	110	ug/Kg	08/01/14	DD	SW 8270
Naphthalene	ND		290	120	ug/Kg	08/01/14	DD	SW 8270
Nitrobenzene	ND		290	140	ug/Kg	08/01/14	DD	SW 8270
N-Nitrosodimethylamine	ND		290	120	ug/Kg	08/01/14	DD	SW 8270
N-Nitrosodi-n-propylamine	ND		290	130	ug/Kg	08/01/14	DD	SW 8270
N-Nitrosodiphenylamine	ND		290	160	ug/Kg	08/01/14	DD	SW 8270
Pentachloronitrobenzene	ND		290	150	ug/Kg	08/01/14	DD	SW 8270
Pentachlorophenol	ND		290	160	ug/Kg	08/01/14	DD	SW 8270
Phenanthrene	350		290	120	ug/Kg	08/01/14	DD	SW 8270
Phenol	ND		290	130	ug/Kg	08/01/14	DD	SW 8270
Pyrene	400		290	140	ug/Kg	08/01/14	DD	SW 8270
Pyridine	ND		290	100	ug/Kg	08/01/14	DD	SW 8270
QA/QC Surrogates								
% 2,4,6-Tribromophenol	80				%	08/01/14	DD	30 - 130 %
% 2-Fluorobiphenyl	72				%	08/01/14	DD	30 - 130 %
% 2-Fluorophenol	70				%	08/01/14	DD	30 - 130 %
% Nitrobenzene-d5	73				%	08/01/14	DD	30 - 130 %
% Phenol-d5	72				%	08/01/14	DD	30 - 130 %
% Terphenyl-d14	95				%	08/01/14	DD	30 - 130 %

Parameter	Result	RL/ PQL	LOD/ MDL	Units	Date/Time	By	Reference

1 = This parameter is not certified by NY NELAC for this matrix. NY NELAC does not offer certification for all parameters at this time.

RL/PQL=Reporting/Practical Quantitation Level (Equivalent to NELAC LOQ, Limit of Quanitation) ND=Not Detected
BRL=Below Reporting Level LOD=Limit of Detection MDL=Method Detection Limit

Comments:

Per 1.4.6 of EPA method 8270D, 1,2-Diphenylhydrazine is unstable and readily converts to Azobenzene. Azobenzene is used for the calibration of 1,2-Diphenylhydrazine.

This sample was not collected in accordance with EPA method 5035. NELAC requires the laboratory to qualify the volatile soil data as biased low.

Volatile Comment:
There was a suppression of the last internal standard in the low level analysis, all affected compounds are reported from the methanol preserved high level analysis which did not exhibit this interference.

All soils, solids and sludges are reported on a dry weight basis unless otherwise noted in the sample comments.

If there are any questions regarding this data, please call Phoenix Client Services at extension 200.
This report must not be reproduced except in full as defined by the attached chain of custody.

PLEASE NOTE: THIS PROGRESS REPORT IS CONSIDERED PRELIMINARY DATA. THE RESULTS ENTERED HAVE NOT BEEN EXAMINED BY OUR QA/QC DEPARTMENT.

Phyllis Shiller, Laboratory Director
August 04, 2014

Environmental Laboratories, Inc.
587 East Middle Turnpike, P.O.Box 370, Manchester, CT 06045
Tel. (860) 645-1102 Fax (860) 645-0823

NY # 11301

Draft Progress Report

August 04, 2014

FOR: Attn: Mr. Charles B. Sosik, P.G.
Environmental Business Consultants
1808 Middle Country Rd
Ridge NY 11961-2406

Sample Information		Custody Information		Date	Time
Matrix:	SOIL	Collected by:		07/29/14	8:40
Location Code:	EBC	Received by:	LB	07/31/14	16:10
Rush Request:	72 Hour	Analyzed by:	see "By" below		
P.O.#:					

Laboratory Data

SDG ID: GBG85525
Phoenix ID: BG85529

Project ID: 526 UNION AVE., BROOKLYN
Client ID: B3 0-2

Parameter	Result	RL/ PQL	Units	Date/Time	By	Reference
Silver	< 0.38	0.38	mg/Kg	08/03/14	LK	SW6010
Aluminum	5860	38	mg/Kg	08/02/14	LK	SW6010
Arsenic	4.3	0.8	mg/Kg	08/03/14	LK	SW6010
Barium	69.3	0.8	mg/Kg	08/03/14	LK	SW6010
Beryllium	< 0.30	0.30	mg/Kg	08/03/14	LK	SW6010
Calcium	50900	38	mg/Kg	08/02/14	LK	SW6010
Cadmium	1.69	0.38	mg/Kg	08/03/14	LK	SW6010
Cobalt	5.70	0.38	mg/Kg	08/03/14	LK	SW6010
Chromium	33.1	0.38	mg/Kg	08/03/14	LK	SW6010
Copper	49.4	0.38	mg/kg	08/03/14	LK	SW6010
Iron	16400	38	mg/Kg	08/02/14	LK	SW6010
Mercury	30.9	3.3	mg/Kg	08/01/14	MA	SW-7471
Potassium	1110	8	mg/Kg	08/03/14	LK	SW6010
Magnesium	13300	38	mg/Kg	08/02/14	LK	SW6010
Manganese	212	3.8	mg/Kg	08/02/14	LK	SW6010
Sodium	184	8	mg/Kg	08/03/14	LK	SW6010
Nickel	18.1	0.38	mg/Kg	08/03/14	LK	SW6010
Lead	85.7	0.8	mg/Kg	08/03/14	LK	SW6010
Antimony	< 1.9	1.9	mg/Kg	08/03/14	LK	SW6010
Selenium	< 1.5	1.5	mg/Kg	08/03/14	LK	SW6010
TCLP Silver	< 0.10	0.10	mg/L	08/03/14	LK	SW6010
TCLP Arsenic	< 0.10	0.10	mg/L	08/03/14	LK	SW6010
TCLP Barium	0.93	0.10	mg/L	08/03/14	LK	SW6010
TCLP Cadmium	Pending		mg/L			SW6010
TCLP Chromium	0.23	0.10	mg/L	08/03/14	LK	SW6010
TCLP Mercury	< 0.0002	0.0002	mg/L	08/01/14	MA	SW7470
TCLP Lead	3.37	0.10	mg/L	08/03/14	LK	SW6010
TCLP Selenium	< 0.10	0.10	mg/L	08/03/14	LK	SW6010

Project ID: 526 UNION AVE., BROOKLYN
Client ID: B3 0-2

Phoenix I.D.: BG85529

Parameter	Result	RL/ PQL	Units	Date/Time	By	Reference
Thallium	< 1.5	1.5	mg/Kg	08/03/14	LK	SW6010
TCLP Metals Digestion	Pending					SW3005
Vanadium	30.3	0.4	mg/Kg	08/03/14	LK	SW6010
Zinc	124	0.8	mg/Kg	08/03/14	LK	SW6010
Percent Solid	87		%	07/31/14	I	E160.3
Mercury Digestion	Completed			08/01/14	I/I	SW7471
TCLP Digestion Mercury	Completed			08/01/14	I/I	E1311/7470
TCLP Extraction for Metals	Completed			07/31/14	I	EPA 1311
Total Metals Digest	Completed			07/31/14	CB/AG	SW846 - 3050

RL/PQL=Reporting/Practical Quantitation Level (Equivalent to NELAC LOQ, Limit of Quanitation) ND=Not Detected
BRL=Below Reporting Level

Comments:

Please be advised that the NY unrestricted soil criteria for chromium is based on hexavalent chromium and trivalent chromium.

All soils, solids and sludges are reported on a dry weight basis unless otherwise noted in the sample comments.

If there are any questions regarding this data, please call Phoenix Client Services at extension 200.
This report must not be reproduced except in full as defined by the attached chain of custody.

PLEASE NOTE: THIS PROGRESS REPORT IS CONSIDERED PRELIMINARY DATA. THE RESULTS ENTERED HAVE NOT BEEN EXAMINED BY OUR QA/QC DEPARTMENT.

Phyllis Shiller, Laboratory Director
August 04, 2014

PHOENIX

Environmental Laboratories, Inc.
587 East Middle Turnpike, P.O.Box 370, Manchester, CT 06045
Tel. (860) 645-1102 Fax (860) 645-0823

ACCREDITED IN ACCORDANCE WITH nelac NY # 11301

Draft Progress Report

August 04, 2014

FOR: Attn: Mr. Charles B. Sosik, P.G.
Environmental Business Consultants
1808 Middle Country Rd
Ridge NY 11961-2406

Sample Information		Custody Information		Date	Time
Matrix:	SOIL	Collected by:		07/29/14	9:00
Location Code:	EBC	Received by:	LB	07/31/14	16:10
Rush Request:	72 Hour	Analyzed by:	see "By" below		
P.O.#:					

Laboratory Data

SDG ID: GBG85525
Phoenix ID: BG85530

Project ID: 526 UNION AVE., BROOKLYN
Client ID: B3 8-10

Parameter	Result	RL/ PQL	LOD/ MDL	Units	Date/Time	By	Reference
Percent Solid	77			%	07/31/14	I	E160.3
Soil Extraction for SVOA	Completed				07/31/14	JJ/HF	SW3545
Volatiles							
1,1,1,2-Tetrachloroethane	ND	6.5	1.1	ug/Kg	08/01/14	JLI	SW8260
1,1,1-Trichloroethane	ND	6.5	1.3	ug/Kg	08/01/14	JLI	SW8260
1,1,2,2-Tetrachloroethane	ND	6.5	0.92	ug/Kg	08/01/14	JLI	SW8260
1,1,2-Trichloroethane	ND	6.5	0.64	ug/Kg	08/01/14	JLI	SW8260
1,1-Dichloroethane	ND	6.5	1.3	ug/Kg	08/01/14	JLI	SW8260
1,1-Dichloroethene	ND	6.5	1.4	ug/Kg	08/01/14	JLI	SW8260
1,1-Dichloropropene	ND	6.5	1.3	ug/Kg	08/01/14	JLI	SW8260
1,2,3-Trichlorobenzene	ND	320	65	ug/Kg	08/02/14	JLI	SW8260
1,2,3-Trichloropropane	ND	320	46	ug/Kg	08/02/14	JLI	SW8260
1,2,4-Trichlorobenzene	ND	320	65	ug/Kg	08/02/14	JLI	SW8260
1,2,4-Trimethylbenzene	ND	320	47	ug/Kg	08/02/14	JLI	SW8260
1,2-Dibromo-3-chloropropane	ND	320	87	ug/Kg	08/02/14	JLI	SW8260
1,2-Dibromoethane	ND	6.5	1.7	ug/Kg	08/01/14	JLI	SW8260
1,2-Dichlorobenzene	ND	320	36	ug/Kg	08/02/14	JLI	SW8260
1,2-Dichloroethane	ND	6.5	0.57	ug/Kg	08/01/14	JLI	SW8260
1,2-Dichloropropane	ND	6.5	0.92	ug/Kg	08/01/14	JLI	SW8260
1,3,5-Trimethylbenzene	ND	320	43	ug/Kg	08/02/14	JLI	SW8260
1,3-Dichlorobenzene	ND	320	48	ug/Kg	08/02/14	JLI	SW8260
1,3-Dichloropropane	ND	6.5	0.69	ug/Kg	08/01/14	JLI	SW8260
1,4-Dichlorobenzene	ND	320	51	ug/Kg	08/02/14	JLI	SW8260
2,2-Dichloropropane	ND	6.5	1.1	ug/Kg	08/01/14	JLI	SW8260
2-Chlorotoluene	ND	320	52	ug/Kg	08/02/14	JLI	SW8260
2-Hexanone	ND	32	2.9	ug/Kg	08/01/14	JLI	SW8260
2-Isopropyltoluene	ND	320	45	ug/Kg	08/02/14	JLI	SW8260 1

Project ID: 526 UNION AVE., BROOKLYN
Client ID: B3 8-10

Phoenix I.D.: BG85530

Parameter	Result		RL/ PQL	LOD/ MDL	Units	Date/Time	By	Reference	
4-Chlorotoluene	ND		320	38	ug/Kg	08/02/14	JLI	SW8260	
4-Methyl-2-pentanone	ND		32	1.5	ug/Kg	08/01/14	JLI	SW8260	
Acetone	110	S	65	6.5	ug/Kg	08/01/14	JLI	SW8260	
Acrylonitrile	ND		13	3.6	ug/Kg	08/01/14	JLI	SW8260	
Benzene	ND		6.5	1.3	ug/Kg	08/01/14	JLI	SW8260	
Bromobenzene	ND		320	42	ug/Kg	08/02/14	JLI	SW8260	
Bromochloromethane	ND		6.5	0.95	ug/Kg	08/01/14	JLI	SW8260	
Bromodichloromethane	ND		6.5	0.81	ug/Kg	08/01/14	JLI	SW8260	
Bromoform	ND		6.5	0.91	ug/Kg	08/01/14	JLI	SW8260	
Bromomethane	ND		6.5	5.0	ug/Kg	08/01/14	JLI	SW8260	
Carbon Disulfide	3.0	J	6.5	1.1	ug/Kg	08/01/14	JLI	SW8260	
Carbon tetrachloride	ND		6.5	0.75	ug/Kg	08/01/14	JLI	SW8260	
Chlorobenzene	ND		6.5	0.96	ug/Kg	08/01/14	JLI	SW8260	
Chloroethane	ND		6.5	1.5	ug/Kg	08/01/14	JLI	SW8260	
Chloroform	ND		6.5	1.2	ug/Kg	08/01/14	JLI	SW8260	
Chloromethane	ND		6.5	3.4	ug/Kg	08/01/14	JLI	SW8260	
cis-1,2-Dichloroethene	ND		6.5	1.4	ug/Kg	08/01/14	JLI	SW8260	
cis-1,3-Dichloropropene	ND		6.5	0.70	ug/Kg	08/01/14	JLI	SW8260	
Dibromochloromethane	ND		6.5	0.73	ug/Kg	08/01/14	JLI	SW8260	
Dibromomethane	ND		6.5	0.82	ug/Kg	08/01/14	JLI	SW8260	
Dichlorodifluoromethane	ND		6.5	1.7	ug/Kg	08/01/14	JLI	SW8260	
Ethylbenzene	ND		6.5	1.2	ug/Kg	08/01/14	JLI	SW8260	
Hexachlorobutadiene	ND		320	68	ug/Kg	08/02/14	JLI	SW8260	
Isopropylbenzene	ND		320	62	ug/Kg	08/02/14	JLI	SW8260	
m&p-Xylene	ND		6.5	2.6	ug/Kg	08/01/14	JLI	SW8260	
Methyl Ethyl Ketone	ND		39	5.6	ug/Kg	08/01/14	JLI	SW8260	
Methyl t-butyl ether (MTBE)	ND		13	1.8	ug/Kg	08/01/14	JLI	SW8260	
Methylene chloride	ND		6.5	1.1	ug/Kg	08/01/14	JLI	SW8260	
Naphthalene	ND		320	87	ug/Kg	08/02/14	JLI	SW8260	
n-Butylbenzene	ND		320	59	ug/Kg	08/02/14	JLI	SW8260	
n-Propylbenzene	ND		320	58	ug/Kg	08/02/14	JLI	SW8260	
o-Xylene	ND		6.5	2.5	ug/Kg	08/01/14	JLI	SW8260	
p-Isopropyltoluene	ND		320	47	ug/Kg	08/02/14	JLI	SW8260	
sec-Butylbenzene	ND		320	61	ug/Kg	08/02/14	JLI	SW8260	
Styrene	ND		6.5	1.9	ug/Kg	08/01/14	JLI	SW8260	
tert-Butylbenzene	ND		320	52	ug/Kg	08/02/14	JLI	SW8260	
Tetrachloroethene	ND		6.5	1.4	ug/Kg	08/01/14	JLI	SW8260	
Tetrahydrofuran (THF)	ND		13	5.8	ug/Kg	08/01/14	JLI	SW8260	1
Toluene	1.5	J	6.5	1.0	ug/Kg	08/01/14	JLI	SW8260	
trans-1,2-Dichloroethene	ND		6.5	1.3	ug/Kg	08/01/14	JLI	SW8260	
trans-1,3-Dichloropropene	ND		6.5	1.3	ug/Kg	08/01/14	JLI	SW8260	
trans-1,4-dichloro-2-butene	ND		650	600	ug/Kg	08/02/14	JLI	SW8260	
Trichloroethene	ND		6.5	1.4	ug/Kg	08/01/14	JLI	SW8260	
Trichlorofluoromethane	ND		6.5	1.4	ug/Kg	08/01/14	JLI	SW8260	
Trichlorotrifluoroethane	ND		6.5	1.0	ug/Kg	08/01/14	JLI	SW8260	
Vinyl chloride	ND		6.5	2.1	ug/Kg	08/01/14	JLI	SW8260	
QA/QC Surrogates									
% 1,2-dichlorobenzene-d4	105				%	08/02/14	JLI	70 - 130 %	
% Bromofluorobenzene	78				%	08/02/14	JLI	70 - 130 %	

Parameter	Result	RL/ PQL	LOD/ MDL	Units	Date/Time	By	Reference	
% Dibromofluoromethane	96			%	08/01/14	JLI	70 - 130 %	
% Toluene-d8	96			%	08/01/14	JLI	70 - 130 %	

Semivolatiles

1,2,4,5-Tetrachlorobenzene	ND	300	150	ug/Kg	08/01/14	DD	SW 8270	
1,2,4-Trichlorobenzene	ND	300	130	ug/Kg	08/01/14	DD	SW 8270	
1,2-Dichlorobenzene	ND	300	120	ug/Kg	08/01/14	DD	SW 8270	
1,2-Diphenylhydrazine	ND	300	140	ug/Kg	08/01/14	DD	SW 8270	
1,3-Dichlorobenzene	ND	300	120	ug/Kg	08/01/14	DD	SW 8270	
1,4-Dichlorobenzene	ND	300	120	ug/Kg	08/01/14	DD	SW 8270	
2,4,5-Trichlorophenol	ND	300	230	ug/Kg	08/01/14	DD	SW 8270	
2,4,6-Trichlorophenol	ND	300	140	ug/Kg	08/01/14	DD	SW 8270	
2,4-Dichlorophenol	ND	300	150	ug/Kg	08/01/14	DD	SW 8270	
2,4-Dimethylphenol	ND	300	100	ug/Kg	08/01/14	DD	SW 8270	
2,4-Dinitrophenol	ND	2100	300	ug/Kg	08/01/14	DD	SW 8270	
2,4-Dinitrotoluene	ND	300	170	ug/Kg	08/01/14	DD	SW 8270	
2,6-Dinitrotoluene	ND	300	130	ug/Kg	08/01/14	DD	SW 8270	
2-Chloronaphthalene	ND	300	120	ug/Kg	08/01/14	DD	SW 8270	
2-Chlorophenol	ND	300	120	ug/Kg	08/01/14	DD	SW 8270	
2-Methylnaphthalene	ND	300	130	ug/Kg	08/01/14	DD	SW 8270	
2-Methylphenol (o-cresol)	ND	300	200	ug/Kg	08/01/14	DD	SW 8270	
2-Nitroaniline	ND	2100	430	ug/Kg	08/01/14	DD	SW 8270	
2-Nitrophenol	ND	300	270	ug/Kg	08/01/14	DD	SW 8270	
3&4-Methylphenol (m&p-cresol)	ND	300	170	ug/Kg	08/01/14	DD	SW 8270	1
3,3'-Dichlorobenzidine	ND	840	200	ug/Kg	08/01/14	DD	SW 8270	
3-Nitroaniline	ND	2100	920	ug/Kg	08/01/14	DD	SW 8270	
4,6-Dinitro-2-methylphenol	ND	2100	450	ug/Kg	08/01/14	DD	SW 8270	
4-Bromophenyl phenyl ether	ND	300	120	ug/Kg	08/01/14	DD	SW 8270	
4-Chloro-3-methylphenol	ND	300	150	ug/Kg	08/01/14	DD	SW 8270	
4-Chloroaniline	ND	840	200	ug/Kg	08/01/14	DD	SW 8270	
4-Chlorophenyl phenyl ether	ND	300	140	ug/Kg	08/01/14	DD	SW 8270	
4-Nitroaniline	ND	2100	140	ug/Kg	08/01/14	DD	SW 8270	
4-Nitrophenol	ND	2100	190	ug/Kg	08/01/14	DD	SW 8270	
Acenaphthene	ND	300	130	ug/Kg	08/01/14	DD	SW 8270	
Acenaphthylene	ND	300	120	ug/Kg	08/01/14	DD	SW 8270	
Acetophenone	ND	300	130	ug/Kg	08/01/14	DD	SW 8270	
Aniline	ND	2100	850	ug/Kg	08/01/14	DD	SW 8270	
Anthracene	ND	300	140	ug/Kg	08/01/14	DD	SW 8270	
Benz(a)anthracene	ND	300	140	ug/Kg	08/01/14	DD	SW 8270	
Benzidine	ND	840	250	ug/Kg	08/01/14	DD	SW 8270	
Benzo(a)pyrene	ND	300	140	ug/Kg	08/01/14	DD	SW 8270	
Benzo(b)fluoranthene	ND	300	140	ug/Kg	08/01/14	DD	SW 8270	
Benzo(ghi)perylene	ND	300	140	ug/Kg	08/01/14	DD	SW 8270	
Benzo(k)fluoranthene	ND	300	140	ug/Kg	08/01/14	DD	SW 8270	
Benzoic acid	ND	2100	840	ug/Kg	08/01/14	DD	SW 8270	1
Benzyl butyl phthalate	ND	300	110	ug/Kg	08/01/14	DD	SW 8270	
Bis(2-chloroethoxy)methane	ND	300	120	ug/Kg	08/01/14	DD	SW 8270	
Bis(2-chloroethyl)ether	ND	300	110	ug/Kg	08/01/14	DD	SW 8270	
Bis(2-chloroisopropyl)ether	ND	300	120	ug/Kg	08/01/14	DD	SW 8270	1
Bis(2-ethylhexyl)phthalate	ND	300	120	ug/Kg	08/01/14	DD	SW 8270	

Project ID: 526 UNION AVE., BROOKLYN
Client ID: B3 8-10

Phoenix I.D.: BG85530

Parameter	Result		RL/ PQL	LOD/ MDL	Units	Date/Time	By	Reference
Carbazole	ND		2100	320	ug/Kg	08/01/14	DD	SW 8270
Chrysene	ND		300	140	ug/Kg	08/01/14	DD	SW 8270
Dibenz(a,h)anthracene	ND		300	140	ug/Kg	08/01/14	DD	SW 8270
Dibenzofuran	ND		300	120	ug/Kg	08/01/14	DD	SW 8270
Diethyl phthalate	ND		300	130	ug/Kg	08/01/14	DD	SW 8270
Dimethylphthalate	ND		300	130	ug/Kg	08/01/14	DD	SW 8270
Di-n-butylphthalate	ND		300	110	ug/Kg	08/01/14	DD	SW 8270
Di-n-octylphthalate	ND		300	110	ug/Kg	08/01/14	DD	SW 8270
Fluoranthene	140	J	300	140	ug/Kg	08/01/14	DD	SW 8270
Fluorene	ND		300	140	ug/Kg	08/01/14	DD	SW 8270
Hexachlorobenzene	ND		300	120	ug/Kg	08/01/14	DD	SW 8270
Hexachlorobutadiene	ND		300	150	ug/Kg	08/01/14	DD	SW 8270
Hexachlorocyclopentadiene	ND		300	130	ug/Kg	08/01/14	DD	SW 8270
Hexachloroethane	ND		300	130	ug/Kg	08/01/14	DD	SW 8270
Indeno(1,2,3-cd)pyrene	ND		300	140	ug/Kg	08/01/14	DD	SW 8270
Isophorone	ND		300	120	ug/Kg	08/01/14	DD	SW 8270
Naphthalene	ND		300	120	ug/Kg	08/01/14	DD	SW 8270
Nitrobenzene	ND		300	150	ug/Kg	08/01/14	DD	SW 8270
N-Nitrosodimethylamine	ND		300	120	ug/Kg	08/01/14	DD	SW 8270
N-Nitrosodi-n-propylamine	ND		300	140	ug/Kg	08/01/14	DD	SW 8270
N-Nitrosodiphenylamine	ND		300	160	ug/Kg	08/01/14	DD	SW 8270
Pentachloronitrobenzene	ND		300	160	ug/Kg	08/01/14	DD	SW 8270
Pentachlorophenol	ND		300	160	ug/Kg	08/01/14	DD	SW 8270
Phenanthrene	ND		300	120	ug/Kg	08/01/14	DD	SW 8270
Phenol	ND		300	140	ug/Kg	08/01/14	DD	SW 8270
Pyrene	ND		300	150	ug/Kg	08/01/14	DD	SW 8270
Pyridine	ND		300	100	ug/Kg	08/01/14	DD	SW 8270
QA/QC Surrogates								
% 2,4,6-Tribromophenol	75				%	08/01/14	DD	30 - 130 %
% 2-Fluorobiphenyl	66				%	08/01/14	DD	30 - 130 %
% 2-Fluorophenol	63				%	08/01/14	DD	30 - 130 %
% Nitrobenzene-d5	63				%	08/01/14	DD	30 - 130 %
% Phenol-d5	65				%	08/01/14	DD	30 - 130 %
% Terphenyl-d14	99				%	08/01/14	DD	30 - 130 %

Parameter	Result	RL/ PQL	LOD/ MDL	Units	Date/Time	By	Reference

1 = This parameter is not certified by NY NELAC for this matrix. NY NELAC does not offer certification for all parameters at this time.

RL/PQL=Reporting/Practical Quantitation Level (Equivalent to NELAC LOQ, Limit of Quanitation) ND=Not Detected
BRL=Below Reporting Level LOD=Limit of Detection MDL=Method Detection Limit

Comments:

Per 1.4.6 of EPA method 8270D, 1,2-Diphenylhydrazine is unstable and readily converts to Azobenzene. Azobenzene is used for the calibration of 1,2-Diphenylhydrazine.

This sample was not collected in accordance with EPA method 5035. NELAC requires the laboratory to qualify the volatile soil data as biased low.

Volatile Comment:
There was a suppression of the last internal standard in the low level analysis, all affected compounds are reported from the methanol preserved high level analysis which did not exhibit this interference.

All soils, solids and sludges are reported on a dry weight basis unless otherwise noted in the sample comments.

If there are any questions regarding this data, please call Phoenix Client Services at extension 200.
This report must not be reproduced except in full as defined by the attached chain of custody.

PLEASE NOTE: THIS PROGRESS REPORT IS CONSIDERED PRELIMINARY DATA. THE RESULTS ENTERED HAVE NOT BEEN EXAMINED BY OUR QA/QC DEPARTMENT.

Phyllis Shiller, Laboratory Director
August 04, 2014

PHOENIX

Environmental Laboratories, Inc.
587 East Middle Turnpike, P.O.Box 370, Manchester, CT 06045
Tel. (860) 645-1102 Fax (860) 645-0823

ACCREDITED IN ACCORDANCE WITH nelac NY # 11301

Draft Progress Report

August 04, 2014

FOR: Attn: Mr. Charles B. Sosik, P.G.
Environmental Business Consultants
1808 Middle Country Rd
Ridge NY 11961-2406

Sample Information		Custody Information		Date	Time
Matrix:	SOIL	Collected by:		07/29/14	9:20
Location Code:	EBC	Received by:	LB	07/31/14	16:10
Rush Request:	72 Hour	Analyzed by:	see "By" below		
P.O.#:					

Laboratory Data

SDG ID: GBG85525
Phoenix ID: BG85531

Project ID: 526 UNION AVE., BROOKLYN
Client ID: B4 2-4

Parameter	Result	RL/ PQL	Units	Date/Time	By	Reference	
Silver	< 0.35	0.35	mg/Kg	08/03/14	LK	SW6010	
Aluminum	4010	35	mg/Kg	08/02/14	LK	SW6010	
Arsenic	6.2	0.7	mg/Kg	08/03/14	LK	SW6010	
Barium	56.6	0.7	mg/Kg	08/03/14	LK	SW6010	
Beryllium	< 0.28	0.28	mg/Kg	08/03/14	LK	SW6010	
Calcium	869	3.5	mg/Kg	08/03/14	LK	SW6010	
Cadmium	5.42	0.35	mg/Kg	08/03/14	LK	SW6010	
Cobalt	16.6	0.35	mg/Kg	08/03/14	LK	SW6010	
Chromium	19.1	0.35	mg/Kg	08/03/14	LK	SW6010	
Copper	41.6	0.35	mg/kg	08/03/14	LK	SW6010	
Iron	Pending		mg/Kg			SW6010	
Mercury	0.64	0.08	mg/Kg	08/01/14	MA	SW-7471	
Potassium	994	7	mg/Kg	08/03/14	LK	SW6010	
Magnesium	451	3.5	mg/Kg	08/03/14	LK	SW6010	
Manganese	776	3.5	mg/Kg	08/02/14	LK	SW6010	
Sodium	99	7	mg/Kg	08/03/14	LK	SW6010	
Nickel	21.8	0.35	mg/Kg	08/03/14	LK	SW6010	
Lead	241	6.9	mg/Kg	08/02/14	LK	SW6010	
Antimony	< 1.7	1.7	mg/Kg	08/03/14	LK	SW6010	
Selenium	< 1.4	1.4	mg/Kg	08/03/14	LK	SW6010	
TCLP Silver	< 0.10	0.10	mg/L	08/03/14	LK	SW6010	
TCLP Arsenic	< 0.10	0.10	mg/L	08/03/14	LK	SW6010	
TCLP Barium	0.21	0.10	mg/L	08/03/14	LK	SW6010	B
TCLP Cadmium	< 0.050	0.050	mg/L	08/03/14	LK	SW6010	
TCLP Chromium	< 0.10	0.10	mg/L	08/03/14	LK	SW6010	
TCLP Mercury	< 0.0002	0.0002	mg/L	08/01/14	MA	SW7470	
TCLP Lead	0.45	0.10	mg/L	08/03/14	LK	SW6010	
TCLP Selenium	< 0.10	0.10	mg/L	08/03/14	LK	SW6010	

Project ID: 526 UNION AVE., BROOKLYN
Client ID: B4 2-4

Phoenix I.D.: BG85531

Parameter	Result	RL/ PQL	Units	Date/Time	By	Reference
Thallium	< 1.4	1.4	mg/Kg	08/03/14	LK	SW6010
TCLP Metals Digestion	Completed			08/01/14	I/I	SW3005
Vanadium	35.3	0.3	mg/Kg	08/03/14	LK	SW6010
Zinc	192	6.9	mg/Kg	08/02/14	LK	SW6010
Percent Solid	89		%	07/31/14	I	E160.3
Mercury Digestion	Completed			08/01/14	I/I	SW7471
TCLP Digestion Mercury	Completed			08/01/14	I/I	E1311/7470
TCLP Extraction for Metals	Completed			07/31/14	I	EPA 1311
Total Metals Digest	Completed			07/31/14	CB/AG	SW846 - 3050

B = Present in blank, no bias suspected.

RL/PQL=Reporting/Practical Quantitation Level (Equivalent to NELAC LOQ, Limit of Quanitation) ND=Not Detected
BRL=Below Reporting Level

Comments:

Please be advised that the NY unrestricted soil criteria for chromium is based on hexavalent chromium and trivalent chromium.

All soils, solids and sludges are reported on a dry weight basis unless otherwise noted in the sample comments.

If there are any questions regarding this data, please call Phoenix Client Services at extension 200.
This report must not be reproduced except in full as defined by the attached chain of custody.

PLEASE NOTE: THIS PROGRESS REPORT IS CONSIDERED PRELIMINARY DATA. THE RESULTS ENTERED HAVE NOT BEEN EXAMINED BY OUR QA/QC DEPARTMENT.

Phyllis Shiller, Laboratory Director
August 04, 2014

PHOENIX

Environmental Laboratories, Inc.
587 East Middle Turnpike, P.O.Box 370, Manchester, CT 06045
Tel. (860) 645-1102 Fax (860) 645-0823

ACCREDITED IN ACCORDANCE WITH nelac NY # 11301

Draft Progress Report

August 04, 2014

FOR: Attn: Mr. Charles B. Sosik, P.G.
Environmental Business Consultants
1808 Middle Country Rd
Ridge NY 11961-2406

Sample Information		Custody Information		Date	Time
Matrix:	SOIL	Collected by:		07/29/14	9:40
Location Code:	EBC	Received by:	LB	07/31/14	16:10
Rush Request:	72 Hour	Analyzed by:	see "By" below		
P.O.#:					

Laboratory Data

SDG ID: GBG85525
Phoenix ID: BG85532

Project ID: 526 UNION AVE., BROOKLYN
Client ID: B4 8-10

Parameter	Result	RL/ PQL	LOD/ MDL	Units	Date/Time	By	Reference
Percent Solid	81			%	07/31/14	I	E160.3
Soil Extraction for SVOA	Completed				07/31/14	JJ/HF	SW3545
Volatiles							
1,1,1,2-Tetrachloroethane	ND	6.2	1.0	ug/Kg	08/01/14	JLI	SW8260
1,1,1-Trichloroethane	ND	6.2	1.2	ug/Kg	08/01/14	JLI	SW8260
1,1,2,2-Tetrachloroethane	ND	6.2	0.88	ug/Kg	08/01/14	JLI	SW8260
1,1,2-Trichloroethane	ND	6.2	0.60	ug/Kg	08/01/14	JLI	SW8260
1,1-Dichloroethane	ND	6.2	1.2	ug/Kg	08/01/14	JLI	SW8260
1,1-Dichloroethene	ND	6.2	1.3	ug/Kg	08/01/14	JLI	SW8260
1,1-Dichloropropene	ND	6.2	1.2	ug/Kg	08/01/14	JLI	SW8260
1,2,3-Trichlorobenzene	ND	6.2	1.2	ug/Kg	08/01/14	JLI	SW8260
1,2,3-Trichloropropane	ND	6.2	0.88	ug/Kg	08/01/14	JLI	SW8260
1,2,4-Trichlorobenzene	ND	6.2	1.2	ug/Kg	08/01/14	JLI	SW8260
1,2,4-Trimethylbenzene	ND	6.2	0.89	ug/Kg	08/01/14	JLI	SW8260
1,2-Dibromo-3-chloropropane	ND	6.2	1.7	ug/Kg	08/01/14	JLI	SW8260
1,2-Dibromoethane	ND	6.2	1.6	ug/Kg	08/01/14	JLI	SW8260
1,2-Dichlorobenzene	ND	6.2	0.68	ug/Kg	08/01/14	JLI	SW8260
1,2-Dichloroethane	ND	6.2	0.54	ug/Kg	08/01/14	JLI	SW8260
1,2-Dichloropropane	ND	6.2	0.88	ug/Kg	08/01/14	JLI	SW8260
1,3,5-Trimethylbenzene	ND	6.2	0.81	ug/Kg	08/01/14	JLI	SW8260
1,3-Dichlorobenzene	ND	6.2	0.91	ug/Kg	08/01/14	JLI	SW8260
1,3-Dichloropropane	ND	6.2	0.65	ug/Kg	08/01/14	JLI	SW8260
1,4-Dichlorobenzene	ND	6.2	0.98	ug/Kg	08/01/14	JLI	SW8260
2,2-Dichloropropane	ND	6.2	1.0	ug/Kg	08/01/14	JLI	SW8260
2-Chlorotoluene	ND	6.2	0.99	ug/Kg	08/01/14	JLI	SW8260
2-Hexanone	ND	31	2.8	ug/Kg	08/01/14	JLI	SW8260
2-Isopropyltoluene	ND	6.2	0.85	ug/Kg	08/01/14	JLI	SW8260 1

Project ID: 526 UNION AVE., BROOKLYN
Client ID: B4 8-10

Phoenix I.D.: BG85532

Parameter	Result		RL/ PQL	LOD/ MDL	Units	Date/Time	By	Reference	
4-Chlorotoluene	ND		6.2	0.72	ug/Kg	08/01/14	JLI	SW8260	
4-Methyl-2-pentanone	ND		31	1.5	ug/Kg	08/01/14	JLI	SW8260	
Acetone	24	JS	62	6.1	ug/Kg	08/01/14	JLI	SW8260	
Acrylonitrile	ND		12	3.5	ug/Kg	08/01/14	JLI	SW8260	
Benzene	ND		6.2	1.2	ug/Kg	08/01/14	JLI	SW8260	
Bromobenzene	ND		6.2	0.80	ug/Kg	08/01/14	JLI	SW8260	
Bromochloromethane	ND		6.2	0.90	ug/Kg	08/01/14	JLI	SW8260	
Bromodichloromethane	ND		6.2	0.77	ug/Kg	08/01/14	JLI	SW8260	
Bromoform	ND		6.2	0.86	ug/Kg	08/01/14	JLI	SW8260	
Bromomethane	ND		6.2	4.8	ug/Kg	08/01/14	JLI	SW8260	
Carbon Disulfide	ND		6.2	1.0	ug/Kg	08/01/14	JLI	SW8260	
Carbon tetrachloride	ND		6.2	0.72	ug/Kg	08/01/14	JLI	SW8260	
Chlorobenzene	ND		6.2	0.91	ug/Kg	08/01/14	JLI	SW8260	
Chloroethane	ND		6.2	1.4	ug/Kg	08/01/14	JLI	SW8260	
Chloroform	ND		6.2	1.1	ug/Kg	08/01/14	JLI	SW8260	
Chloromethane	ND		6.2	3.2	ug/Kg	08/01/14	JLI	SW8260	
cis-1,2-Dichloroethene	ND		6.2	1.3	ug/Kg	08/01/14	JLI	SW8260	
cis-1,3-Dichloropropene	ND		6.2	0.67	ug/Kg	08/01/14	JLI	SW8260	
Dibromochloromethane	ND		6.2	0.69	ug/Kg	08/01/14	JLI	SW8260	
Dibromomethane	ND		6.2	0.78	ug/Kg	08/01/14	JLI	SW8260	
Dichlorodifluoromethane	ND		6.2	1.6	ug/Kg	08/01/14	JLI	SW8260	
Ethylbenzene	ND		6.2	1.1	ug/Kg	08/01/14	JLI	SW8260	
Hexachlorobutadiene	ND		6.2	1.3	ug/Kg	08/01/14	JLI	SW8260	
Isopropylbenzene	ND		6.2	1.2	ug/Kg	08/01/14	JLI	SW8260	
m&p-Xylene	ND		6.2	2.4	ug/Kg	08/01/14	JLI	SW8260	
Methyl Ethyl Ketone	ND		37	5.4	ug/Kg	08/01/14	JLI	SW8260	
Methyl t-butyl ether (MTBE)	ND		12	1.7	ug/Kg	08/01/14	JLI	SW8260	
Methylene chloride	1.3	JS	6.2	1.0	ug/Kg	08/01/14	JLI	SW8260	
Naphthalene	ND		6.2	1.7	ug/Kg	08/01/14	JLI	SW8260	
n-Butylbenzene	ND		6.2	1.1	ug/Kg	08/01/14	JLI	SW8260	
n-Propylbenzene	ND		6.2	1.1	ug/Kg	08/01/14	JLI	SW8260	
o-Xylene	ND		6.2	2.4	ug/Kg	08/01/14	JLI	SW8260	
p-Isopropyltoluene	ND		6.2	0.89	ug/Kg	08/01/14	JLI	SW8260	
sec-Butylbenzene	ND		6.2	1.2	ug/Kg	08/01/14	JLI	SW8260	
Styrene	ND		6.2	1.8	ug/Kg	08/01/14	JLI	SW8260	
tert-Butylbenzene	ND		6.2	0.99	ug/Kg	08/01/14	JLI	SW8260	
Tetrachloroethene	ND		6.2	1.3	ug/Kg	08/01/14	JLI	SW8260	
Tetrahydrofuran (THF)	ND		12	5.6	ug/Kg	08/01/14	JLI	SW8260	1
Toluene	ND		6.2	0.98	ug/Kg	08/01/14	JLI	SW8260	
trans-1,2-Dichloroethene	ND		6.2	1.2	ug/Kg	08/01/14	JLI	SW8260	
trans-1,3-Dichloropropene	ND		6.2	1.3	ug/Kg	08/01/14	JLI	SW8260	
trans-1,4-dichloro-2-butene	ND		12	11	ug/Kg	08/01/14	JLI	SW8260	
Trichloroethene	ND		6.2	1.3	ug/Kg	08/01/14	JLI	SW8260	
Trichlorofluoromethane	ND		6.2	1.4	ug/Kg	08/01/14	JLI	SW8260	
Trichlorotrifluoroethane	ND		6.2	0.96	ug/Kg	08/01/14	JLI	SW8260	
Vinyl chloride	ND		6.2	2.0	ug/Kg	08/01/14	JLI	SW8260	
QA/QC Surrogates									
% 1,2-dichlorobenzene-d4	101				%	08/01/14	JLI	70 - 130 %	
% Bromofluorobenzene	95				%	08/01/14	JLI	70 - 130 %	

Project ID: 526 UNION AVE., BROOKLYN
Client ID: B4 8-10

Phoenix I.D.: BG85532

Parameter	Result	RL/ PQL	LOD/ MDL	Units	Date/Time	By	Reference	
% Dibromofluoromethane	91			%	08/01/14	JLI	70 - 130 %	
% Toluene-d8	101			%	08/01/14	JLI	70 - 130 %	
Semivolatiles								
1,2,4,5-Tetrachlorobenzene	ND	280	140	ug/Kg	08/01/14	DD	SW 8270	
1,2,4-Trichlorobenzene	ND	280	120	ug/Kg	08/01/14	DD	SW 8270	
1,2-Dichlorobenzene	ND	280	110	ug/Kg	08/01/14	DD	SW 8270	
1,2-Diphenylhydrazine	ND	280	130	ug/Kg	08/01/14	DD	SW 8270	
1,3-Dichlorobenzene	ND	280	120	ug/Kg	08/01/14	DD	SW 8270	
1,4-Dichlorobenzene	ND	280	120	ug/Kg	08/01/14	DD	SW 8270	
2,4,5-Trichlorophenol	ND	280	220	ug/Kg	08/01/14	DD	SW 8270	
2,4,6-Trichlorophenol	ND	280	130	ug/Kg	08/01/14	DD	SW 8270	
2,4-Dichlorophenol	ND	280	140	ug/Kg	08/01/14	DD	SW 8270	
2,4-Dimethylphenol	ND	280	99	ug/Kg	08/01/14	DD	SW 8270	
2,4-Dinitrophenol	ND	2000	280	ug/Kg	08/01/14	DD	SW 8270	
2,4-Dinitrotoluene	ND	280	160	ug/Kg	08/01/14	DD	SW 8270	
2,6-Dinitrotoluene	ND	280	130	ug/Kg	08/01/14	DD	SW 8270	
2-Chloronaphthalene	ND	280	110	ug/Kg	08/01/14	DD	SW 8270	
2-Chlorophenol	ND	280	110	ug/Kg	08/01/14	DD	SW 8270	
2-Methylnaphthalene	ND	280	120	ug/Kg	08/01/14	DD	SW 8270	
2-Methylphenol (o-cresol)	ND	280	190	ug/Kg	08/01/14	DD	SW 8270	
2-Nitroaniline	ND	2000	400	ug/Kg	08/01/14	DD	SW 8270	
2-Nitrophenol	ND	280	250	ug/Kg	08/01/14	DD	SW 8270	
3&4-Methylphenol (m&p-cresol)	ND	280	160	ug/Kg	08/01/14	DD	SW 8270	1
3,3'-Dichlorobenzidine	ND	800	190	ug/Kg	08/01/14	DD	SW 8270	
3-Nitroaniline	ND	2000	870	ug/Kg	08/01/14	DD	SW 8270	
4,6-Dinitro-2-methylphenol	ND	2000	430	ug/Kg	08/01/14	DD	SW 8270	
4-Bromophenyl phenyl ether	ND	280	120	ug/Kg	08/01/14	DD	SW 8270	
4-Chloro-3-methylphenol	ND	280	140	ug/Kg	08/01/14	DD	SW 8270	
4-Chloroaniline	ND	800	190	ug/Kg	08/01/14	DD	SW 8270	
4-Chlorophenyl phenyl ether	ND	280	130	ug/Kg	08/01/14	DD	SW 8270	
4-Nitroaniline	ND	2000	130	ug/Kg	08/01/14	DD	SW 8270	
4-Nitrophenol	ND	2000	180	ug/Kg	08/01/14	DD	SW 8270	
Acenaphthene	ND	280	120	ug/Kg	08/01/14	DD	SW 8270	
Acenaphthylene	ND	280	110	ug/Kg	08/01/14	DD	SW 8270	
Acetophenone	ND	280	120	ug/Kg	08/01/14	DD	SW 8270	
Aniline	ND	2000	810	ug/Kg	08/01/14	DD	SW 8270	
Anthracene	ND	280	130	ug/Kg	08/01/14	DD	SW 8270	
Benz(a)anthracene	ND	280	130	ug/Kg	08/01/14	DD	SW 8270	
Benzidine	ND	800	230	ug/Kg	08/01/14	DD	SW 8270	
Benzo(a)pyrene	ND	280	130	ug/Kg	08/01/14	DD	SW 8270	
Benzo(b)fluoranthene	ND	280	140	ug/Kg	08/01/14	DD	SW 8270	
Benzo(ghi)perylene	ND	280	130	ug/Kg	08/01/14	DD	SW 8270	
Benzo(k)fluoranthene	ND	280	130	ug/Kg	08/01/14	DD	SW 8270	
Benzoic acid	ND	2000	800	ug/Kg	08/01/14	DD	SW 8270	1
Benzyl butyl phthalate	ND	280	100	ug/Kg	08/01/14	DD	SW 8270	
Bis(2-chloroethoxy)methane	ND	280	110	ug/Kg	08/01/14	DD	SW 8270	
Bis(2-chloroethyl)ether	ND	280	110	ug/Kg	08/01/14	DD	SW 8270	
Bis(2-chloroisopropyl)ether	ND	280	110	ug/Kg	08/01/14	DD	SW 8270	1
Bis(2-ethylhexyl)phthalate	ND	280	120	ug/Kg	08/01/14	DD	SW 8270	

Project ID: 526 UNION AVE., BROOKLYN
Client ID: B4 8-10

Phoenix I.D.: BG85532

Parameter	Result	RL/ PQL	LOD/ MDL	Units	Date/Time	By	Reference
Carbazole	ND	2000	300	ug/Kg	08/01/14	DD	SW 8270
Chrysene	ND	280	130	ug/Kg	08/01/14	DD	SW 8270
Dibenz(a,h)anthracene	ND	280	130	ug/Kg	08/01/14	DD	SW 8270
Dibenzofuran	ND	280	120	ug/Kg	08/01/14	DD	SW 8270
Diethyl phthalate	ND	280	130	ug/Kg	08/01/14	DD	SW 8270
Dimethylphthalate	ND	280	120	ug/Kg	08/01/14	DD	SW 8270
Di-n-butylphthalate	ND	280	110	ug/Kg	08/01/14	DD	SW 8270
Di-n-octylphthalate	ND	280	100	ug/Kg	08/01/14	DD	SW 8270
Fluoranthene	ND	280	130	ug/Kg	08/01/14	DD	SW 8270
Fluorene	ND	280	130	ug/Kg	08/01/14	DD	SW 8270
Hexachlorobenzene	ND	280	120	ug/Kg	08/01/14	DD	SW 8270
Hexachlorobutadiene	ND	280	140	ug/Kg	08/01/14	DD	SW 8270
Hexachlorocyclopentadiene	ND	280	120	ug/Kg	08/01/14	DD	SW 8270
Hexachloroethane	ND	280	120	ug/Kg	08/01/14	DD	SW 8270
Indeno(1,2,3-cd)pyrene	ND	280	130	ug/Kg	08/01/14	DD	SW 8270
Isophorone	ND	280	110	ug/Kg	08/01/14	DD	SW 8270
Naphthalene	ND	280	120	ug/Kg	08/01/14	DD	SW 8270
Nitrobenzene	ND	280	140	ug/Kg	08/01/14	DD	SW 8270
N-Nitrosodimethylamine	ND	280	110	ug/Kg	08/01/14	DD	SW 8270
N-Nitrosodi-n-propylamine	ND	280	130	ug/Kg	08/01/14	DD	SW 8270
N-Nitrosodiphenylamine	ND	280	150	ug/Kg	08/01/14	DD	SW 8270
Pentachloronitrobenzene	ND	280	150	ug/Kg	08/01/14	DD	SW 8270
Pentachlorophenol	ND	280	150	ug/Kg	08/01/14	DD	SW 8270
Phenanthrene	ND	280	110	ug/Kg	08/01/14	DD	SW 8270
Phenol	ND	280	130	ug/Kg	08/01/14	DD	SW 8270
Pyrene	ND	280	140	ug/Kg	08/01/14	DD	SW 8270
Pyridine	ND	280	98	ug/Kg	08/01/14	DD	SW 8270
QA/QC Surrogates							
% 2,4,6-Tribromophenol	77			%	08/01/14	DD	30 - 130 %
% 2-Fluorobiphenyl	66			%	08/01/14	DD	30 - 130 %
% 2-Fluorophenol	67			%	08/01/14	DD	30 - 130 %
% Nitrobenzene-d5	63			%	08/01/14	DD	30 - 130 %
% Phenol-d5	72			%	08/01/14	DD	30 - 130 %
% Terphenyl-d14	93			%	08/01/14	DD	30 - 130 %

Project ID: 526 UNION AVE., BROOKLYN

Phoenix I.D.: BG85532

Client ID: B4 8-10

Parameter	Result	RL/ PQL	LOD/ MDL	Units	Date/Time	By	Reference

1 = This parameter is not certified by NY NELAC for this matrix. NY NELAC does not offer certification for all parameters at this time.

RL/PQL=Reporting/Practical Quantitation Level (Equivalent to NELAC LOQ, Limit of Quanitation) ND=Not Detected
BRL=Below Reporting Level LOD=Limit of Detection MDL=Method Detection Limit

Comments:

Per 1.4.6 of EPA method 8270D, 1,2-Diphenylhydrazine is unstable and readily converts to Azobenzene. Azobenzene is used for the calibration of 1,2-Diphenylhydrazine.

This sample was not collected in accordance with EPA method 5035. NELAC requires the laboratory to qualify the volatile soil data as biased low.

All soils, solids and sludges are reported on a dry weight basis unless otherwise noted in the sample comments.

If there are any questions regarding this data, please call Phoenix Client Services at extension 200.
This report must not be reproduced except in full as defined by the attached chain of custody.

PLEASE NOTE: THIS PROGRESS REPORT IS CONSIDERED PRELIMINARY DATA. THE RESULTS ENTERED HAVE NOT BEEN EXAMINED BY OUR QA/QC DEPARTMENT.

Phyllis Shiller, Laboratory Director
August 04, 2014

Environmental Laboratories, Inc.
587 East Middle Turnpike, P.O.Box 370, Manchester, CT 06045
Tel. (860) 645-1102 Fax (860) 645-0823

NY # 11301

Draft Progress Report

August 04, 2014

FOR: Attn: Mr. Charles B. Sosik, P.G.
Environmental Business Consultants
1808 Middle Country Rd
Ridge NY 11961-2406

Sample Information		Custody Information		Date	Time
Matrix:	SOIL	Collected by:		07/29/14	10:00
Location Code:	EBC	Received by:	LB	07/31/14	16:10
Rush Request:	72 Hour	Analyzed by:	see "By" below		
P.O.#:					

Laboratory Data

SDG ID: GBG85525
Phoenix ID: BG85533

Project ID: 526 UNION AVE., BROOKLYN
Client ID: B5 0-2

Parameter	Result	RL/ PQL	Units	Date/Time	By	Reference	
Silver	7.29	0.38	mg/Kg	08/03/14	LK	SW6010	
Aluminum	5630	38	mg/Kg	08/02/14	LK	SW6010	
Arsenic	108	0.8	mg/Kg	08/03/14	LK	SW6010	
Barium	2730	7.6	mg/Kg	08/02/14	LK	SW6010	
Beryllium	0.60	0.31	mg/Kg	08/03/14	LK	SW6010	
Calcium	8820	3.8	mg/Kg	08/03/14	LK	SW6010	
Cadmium	42.7	0.38	mg/Kg	08/03/14	LK	SW6010	
Cobalt	43.9	0.38	mg/Kg	08/03/14	LK	SW6010	
Chromium	195	3.8	mg/Kg	08/02/14	LK	SW6010	
Copper	Pending		mg/kg			SW6010	
Iron	Pending		mg/Kg			SW6010	
Mercury	16.9	3.9	mg/Kg	08/01/14	MA	SW-7471	
Potassium	502	8	mg/Kg	08/03/14	LK	SW6010	
Magnesium	2310	3.8	mg/Kg	08/03/14	LK	SW6010	
Manganese	Pending		mg/Kg			SW6010	
Sodium	290	8	mg/Kg	08/03/14	LK	SW6010	
Nickel	323	3.8	mg/Kg	08/02/14	LK	SW6010	
Lead	Pending		mg/Kg			SW6010	
Antimony	50.3	1.9	mg/Kg	08/03/14	LK	SW6010	
Selenium	< 1.5	1.5	mg/Kg	08/03/14	LK	SW6010	
TCLP Silver	< 0.10	0.10	mg/L	08/03/14	LK	SW6010	
TCLP Arsenic	< 0.10	0.10	mg/L	08/03/14	LK	SW6010	
TCLP Barium	1.55	0.10	mg/L	08/03/14	LK	SW6010	B
TCLP Cadmium	0.273	0.050	mg/L	08/03/14	LK	SW6010	
TCLP Chromium	< 0.10	0.10	mg/L	08/03/14	LK	SW6010	
TCLP Mercury	0.0005	0.0002	mg/L	08/01/14	MA	SW7470	
TCLP Lead	Pending		mg/L			SW6010	
TCLP Selenium	< 0.10	0.10	mg/L	08/03/14	LK	SW6010	

Project ID: 526 UNION AVE., BROOKLYN
Client ID: B5 0-2

Phoenix I.D.: BG85533

Parameter	Result	RL/ PQL	Units	Date/Time	By	Reference
Thallium	< 1.5	1.5	mg/Kg	08/03/14	LK	SW6010
TCLP Metals Digestion	Completed			08/01/14	I/I	SW3005
Vanadium	46.0	0.4	mg/Kg	08/03/14	LK	SW6010
Zinc	Pending		mg/Kg			SW6010
Percent Solid	85		%	07/31/14	I	E160.3
Mercury Digestion	Completed			08/01/14	I/I	SW7471
TCLP Digestion Mercury	Completed			08/01/14	I/I	E1311/7470
TCLP Extraction for Metals	Completed			07/31/14	I	EPA 1311
Total Metals Digest	Completed			07/31/14	CB/AG	SW846 - 3050

B = Present in blank, no bias suspected.

RL/PQL=Reporting/Practical Quantitation Level (Equivalent to NELAC LOQ, Limit of Quanitation) ND=Not Detected
BRL=Below Reporting Level

Comments:

Please be advised that the NY unrestricted soil criteria for chromium is based on hexavalent chromium and trivalent chromium.

All soils, solids and sludges are reported on a dry weight basis unless otherwise noted in the sample comments.

If there are any questions regarding this data, please call Phoenix Client Services at extension 200.
This report must not be reproduced except in full as defined by the attached chain of custody.

PLEASE NOTE: THIS PROGRESS REPORT IS CONSIDERED PRELIMINARY DATA. THE RESULTS ENTERED HAVE NOT BEEN EXAMINED BY OUR QA/QC DEPARTMENT.

Phyllis Shiller, Laboratory Director
August 04, 2014

PHOENIX

Environmental Laboratories, Inc.
587 East Middle Turnpike, P.O.Box 370, Manchester, CT 06045
Tel. (860) 645-1102 Fax (860) 645-0823

ACCREDITED IN ACCORDANCE WITH nelac NY # 11301

Draft Progress Report

August 04, 2014

FOR: Attn: Mr. Charles B. Sosik, P.G.
Environmental Business Consultants
1808 Middle Country Rd
Ridge NY 11961-2406

Sample Information		Custody Information		Date	Time
Matrix:	SOIL	Collected by:		07/29/14	10:20
Location Code:	EBC	Received by:	LB	07/31/14	16:10
Rush Request:	72 Hour	Analyzed by:	see "By" below		
P.O.#:					

Laboratory Data

SDG ID: GBG85525
Phoenix ID: BG85534

Project ID: 526 UNION AVE., BROOKLYN
Client ID: B5 8-10

Parameter	Result	RL/ PQL	LOD/ MDL	Units	Date/Time	By	Reference
Percent Solid	75			%	07/31/14	I	E160.3
Soil Extraction for SVOA	Completed				07/31/14	JJ/HF	SW3545
Volatiles							
1,1,1,2-Tetrachloroethane	ND	6.7	1.1	ug/Kg	08/01/14	JLI	SW8260
1,1,1-Trichloroethane	ND	6.7	1.3	ug/Kg	08/01/14	JLI	SW8260
1,1,2,2-Tetrachloroethane	ND	6.7	0.95	ug/Kg	08/01/14	JLI	SW8260
1,1,2-Trichloroethane	ND	6.7	0.65	ug/Kg	08/01/14	JLI	SW8260
1,1-Dichloroethane	ND	6.7	1.3	ug/Kg	08/01/14	JLI	SW8260
1,1-Dichloroethene	ND	6.7	1.5	ug/Kg	08/01/14	JLI	SW8260
1,1-Dichloropropene	ND	6.7	1.3	ug/Kg	08/01/14	JLI	SW8260
1,2,3-Trichlorobenzene	ND	330	67	ug/Kg	08/02/14	JLI	SW8260
1,2,3-Trichloropropane	ND	330	47	ug/Kg	08/02/14	JLI	SW8260
1,2,4-Trichlorobenzene	ND	330	67	ug/Kg	08/02/14	JLI	SW8260
1,2,4-Trimethylbenzene	ND	330	48	ug/Kg	08/02/14	JLI	SW8260
1,2-Dibromo-3-chloropropane	ND	330	89	ug/Kg	08/02/14	JLI	SW8260
1,2-Dibromoethane	ND	6.7	1.8	ug/Kg	08/01/14	JLI	SW8260
1,2-Dichlorobenzene	ND	330	37	ug/Kg	08/02/14	JLI	SW8260
1,2-Dichloroethane	ND	6.7	0.59	ug/Kg	08/01/14	JLI	SW8260
1,2-Dichloropropane	ND	6.7	0.95	ug/Kg	08/01/14	JLI	SW8260
1,3,5-Trimethylbenzene	ND	330	44	ug/Kg	08/02/14	JLI	SW8260
1,3-Dichlorobenzene	ND	330	49	ug/Kg	08/02/14	JLI	SW8260
1,3-Dichloropropane	ND	6.7	0.71	ug/Kg	08/01/14	JLI	SW8260
1,4-Dichlorobenzene	ND	330	53	ug/Kg	08/02/14	JLI	SW8260
2,2-Dichloropropane	ND	6.7	1.1	ug/Kg	08/01/14	JLI	SW8260
2-Chlorotoluene	ND	330	53	ug/Kg	08/02/14	JLI	SW8260
2-Hexanone	ND	33	3.0	ug/Kg	08/01/14	JLI	SW8260
2-Isopropyltoluene	ND	330	46	ug/Kg	08/02/14	JLI	SW8260 1

Project ID: 526 UNION AVE., BROOKLYN
Client ID: B5 8-10

Phoenix I.D.: BG85534

Parameter	Result		RL/ PQL	LOD/ MDL	Units	Date/Time	By	Reference	
4-Chlorotoluene	ND		330	39	ug/Kg	08/02/14	JLI	SW8260	
4-Methyl-2-pentanone	ND		33	1.6	ug/Kg	08/01/14	JLI	SW8260	
Acetone	64	JS	67	6.6	ug/Kg	08/01/14	JLI	SW8260	
Acrylonitrile	ND		13	3.7	ug/Kg	08/01/14	JLI	SW8260	
Benzene	ND		6.7	1.3	ug/Kg	08/01/14	JLI	SW8260	
Bromobenzene	ND		330	43	ug/Kg	08/02/14	JLI	SW8260	
Bromochloromethane	ND		6.7	0.97	ug/Kg	08/01/14	JLI	SW8260	
Bromodichloromethane	ND		6.7	0.83	ug/Kg	08/01/14	JLI	SW8260	
Bromoform	ND		6.7	0.93	ug/Kg	08/01/14	JLI	SW8260	
Bromomethane	ND		6.7	5.1	ug/Kg	08/01/14	JLI	SW8260	
Carbon Disulfide	ND		6.7	1.1	ug/Kg	08/01/14	JLI	SW8260	
Carbon tetrachloride	ND		6.7	0.77	ug/Kg	08/01/14	JLI	SW8260	
Chlorobenzene	ND		6.7	0.99	ug/Kg	08/01/14	JLI	SW8260	
Chloroethane	ND		6.7	1.6	ug/Kg	08/01/14	JLI	SW8260	
Chloroform	ND		6.7	1.2	ug/Kg	08/01/14	JLI	SW8260	
Chloromethane	ND		6.7	3.5	ug/Kg	08/01/14	JLI	SW8260	
cis-1,2-Dichloroethene	ND		6.7	1.5	ug/Kg	08/01/14	JLI	SW8260	
cis-1,3-Dichloropropene	ND		6.7	0.72	ug/Kg	08/01/14	JLI	SW8260	
Dibromochloromethane	ND		6.7	0.75	ug/Kg	08/01/14	JLI	SW8260	
Dibromomethane	ND		6.7	0.84	ug/Kg	08/01/14	JLI	SW8260	
Dichlorodifluoromethane	ND		6.7	1.8	ug/Kg	08/01/14	JLI	SW8260	
Ethylbenzene	ND		6.7	1.2	ug/Kg	08/01/14	JLI	SW8260	
Hexachlorobutadiene	ND		330	70	ug/Kg	08/02/14	JLI	SW8260	
Isopropylbenzene	ND		330	64	ug/Kg	08/02/14	JLI	SW8260	
m&p-Xylene	ND		6.7	2.6	ug/Kg	08/01/14	JLI	SW8260	
Methyl Ethyl Ketone	16	J	40	5.8	ug/Kg	08/01/14	JLI	SW8260	
Methyl t-butyl ether (MTBE)	ND		13	1.8	ug/Kg	08/01/14	JLI	SW8260	
Methylene chloride	1.8	JS	6.7	1.1	ug/Kg	08/01/14	JLI	SW8260	
Naphthalene	ND		330	89	ug/Kg	08/02/14	JLI	SW8260	
n-Butylbenzene	ND		330	61	ug/Kg	08/02/14	JLI	SW8260	
n-Propylbenzene	ND		330	60	ug/Kg	08/02/14	JLI	SW8260	
o-Xylene	ND		6.7	2.5	ug/Kg	08/01/14	JLI	SW8260	
p-Isopropyltoluene	ND		330	48	ug/Kg	08/02/14	JLI	SW8260	
sec-Butylbenzene	ND		330	63	ug/Kg	08/02/14	JLI	SW8260	
Styrene	ND		6.7	1.9	ug/Kg	08/01/14	JLI	SW8260	
tert-Butylbenzene	ND		330	53	ug/Kg	08/02/14	JLI	SW8260	
Tetrachloroethene	ND		6.7	1.4	ug/Kg	08/01/14	JLI	SW8260	
Tetrahydrofuran (THF)	ND		13	6.0	ug/Kg	08/01/14	JLI	SW8260	1
Toluene	ND		6.7	1.1	ug/Kg	08/01/14	JLI	SW8260	
trans-1,2-Dichloroethene	ND		6.7	1.3	ug/Kg	08/01/14	JLI	SW8260	
trans-1,3-Dichloropropene	ND		6.7	1.4	ug/Kg	08/01/14	JLI	SW8260	
trans-1,4-dichloro-2-butene	ND		670	620	ug/Kg	08/02/14	JLI	SW8260	
Trichloroethene	ND		6.7	1.4	ug/Kg	08/01/14	JLI	SW8260	
Trichlorofluoromethane	ND		6.7	1.5	ug/Kg	08/01/14	JLI	SW8260	
Trichlorotrifluoroethane	ND		6.7	1.0	ug/Kg	08/01/14	JLI	SW8260	
Vinyl chloride	ND		6.7	2.2	ug/Kg	08/01/14	JLI	SW8260	
QA/QC Surrogates									
% 1,2-dichlorobenzene-d4	103				%	08/02/14	JLI	70 - 130 %	
% Bromofluorobenzene	77				%	08/02/14	JLI	70 - 130 %	

Parameter	Result		RL/ PQL	LOD/ MDL	Units	Date/Time	By	Reference	
% Dibromofluoromethane	97				%	08/01/14	JLI	70 - 130 %	
% Toluene-d8	99				%	08/01/14	JLI	70 - 130 %	
Semivolatiles									
1,2,4,5-Tetrachlorobenzene	ND		300	150	ug/Kg	08/01/14	DD	SW 8270	
1,2,4-Trichlorobenzene	ND		300	130	ug/Kg	08/01/14	DD	SW 8270	
1,2-Dichlorobenzene	ND		300	120	ug/Kg	08/01/14	DD	SW 8270	
1,2-Diphenylhydrazine	ND		300	140	ug/Kg	08/01/14	DD	SW 8270	
1,3-Dichlorobenzene	ND		300	130	ug/Kg	08/01/14	DD	SW 8270	
1,4-Dichlorobenzene	ND		300	130	ug/Kg	08/01/14	DD	SW 8270	
2,4,5-Trichlorophenol	ND		300	240	ug/Kg	08/01/14	DD	SW 8270	
2,4,6-Trichlorophenol	ND		300	140	ug/Kg	08/01/14	DD	SW 8270	
2,4-Dichlorophenol	ND		300	150	ug/Kg	08/01/14	DD	SW 8270	
2,4-Dimethylphenol	ND		300	110	ug/Kg	08/01/14	DD	SW 8270	
2,4-Dinitrophenol	ND		2200	300	ug/Kg	08/01/14	DD	SW 8270	
2,4-Dinitrotoluene	ND		300	170	ug/Kg	08/01/14	DD	SW 8270	
2,6-Dinitrotoluene	ND		300	140	ug/Kg	08/01/14	DD	SW 8270	
2-Chloronaphthalene	ND		300	120	ug/Kg	08/01/14	DD	SW 8270	
2-Chlorophenol	ND		300	120	ug/Kg	08/01/14	DD	SW 8270	
2-Methylnaphthalene	ND		300	130	ug/Kg	08/01/14	DD	SW 8270	
2-Methylphenol (o-cresol)	ND		300	200	ug/Kg	08/01/14	DD	SW 8270	
2-Nitroaniline	ND		2200	440	ug/Kg	08/01/14	DD	SW 8270	
2-Nitrophenol	ND		300	270	ug/Kg	08/01/14	DD	SW 8270	
3&4-Methylphenol (m&p-cresol)	ND		300	170	ug/Kg	08/01/14	DD	SW 8270	1
3,3'-Dichlorobenzidine	ND		860	200	ug/Kg	08/01/14	DD	SW 8270	
3-Nitroaniline	ND		2200	940	ug/Kg	08/01/14	DD	SW 8270	
4,6-Dinitro-2-methylphenol	ND		2200	460	ug/Kg	08/01/14	DD	SW 8270	
4-Bromophenyl phenyl ether	ND		300	130	ug/Kg	08/01/14	DD	SW 8270	
4-Chloro-3-methylphenol	ND		300	150	ug/Kg	08/01/14	DD	SW 8270	
4-Chloroaniline	ND		860	200	ug/Kg	08/01/14	DD	SW 8270	
4-Chlorophenyl phenyl ether	ND		300	150	ug/Kg	08/01/14	DD	SW 8270	
4-Nitroaniline	ND		2200	140	ug/Kg	08/01/14	DD	SW 8270	
4-Nitrophenol	ND		2200	200	ug/Kg	08/01/14	DD	SW 8270	
Acenaphthene	160	J	300	130	ug/Kg	08/01/14	DD	SW 8270	
Acenaphthylene	ND		300	120	ug/Kg	08/01/14	DD	SW 8270	
Acetophenone	ND		300	130	ug/Kg	08/01/14	DD	SW 8270	
Aniline	ND		2200	870	ug/Kg	08/01/14	DD	SW 8270	
Anthracene	150	J	300	140	ug/Kg	08/01/14	DD	SW 8270	
Benz(a)anthracene	220	J	300	150	ug/Kg	08/01/14	DD	SW 8270	
Benzidine	ND		860	250	ug/Kg	08/01/14	DD	SW 8270	
Benzo(a)pyrene	190	J	300	140	ug/Kg	08/01/14	DD	SW 8270	
Benzo(b)fluoranthene	220	J	300	150	ug/Kg	08/01/14	DD	SW 8270	
Benzo(ghi)perylene	ND		300	140	ug/Kg	08/01/14	DD	SW 8270	
Benzo(k)fluoranthene	ND		300	140	ug/Kg	08/01/14	DD	SW 8270	
Benzoic acid	ND		2200	860	ug/Kg	08/01/14	DD	SW 8270	1
Benzyl butyl phthalate	ND		300	110	ug/Kg	08/01/14	DD	SW 8270	
Bis(2-chloroethoxy)methane	ND		300	120	ug/Kg	08/01/14	DD	SW 8270	
Bis(2-chloroethyl)ether	ND		300	120	ug/Kg	08/01/14	DD	SW 8270	
Bis(2-chloroisopropyl)ether	ND		300	120	ug/Kg	08/01/14	DD	SW 8270	1
Bis(2-ethylhexyl)phthalate	ND		300	120	ug/Kg	08/01/14	DD	SW 8270	

Project ID: 526 UNION AVE., BROOKLYN
Client ID: B5 8-10

Phoenix I.D.: BG85534

Parameter	Result		RL/ PQL	LOD/ MDL	Units	Date/Time	By	Reference
Carbazole	ND		2200	330	ug/Kg	08/01/14	DD	SW 8270
Chrysene	210	J	300	150	ug/Kg	08/01/14	DD	SW 8270
Dibenz(a,h)anthracene	ND		300	140	ug/Kg	08/01/14	DD	SW 8270
Dibenzofuran	130	J	300	130	ug/Kg	08/01/14	DD	SW 8270
Diethyl phthalate	ND		300	140	ug/Kg	08/01/14	DD	SW 8270
Dimethylphthalate	ND		300	130	ug/Kg	08/01/14	DD	SW 8270
Di-n-butylphthalate	ND		300	110	ug/Kg	08/01/14	DD	SW 8270
Di-n-octylphthalate	ND		300	110	ug/Kg	08/01/14	DD	SW 8270
Fluoranthene	630		300	140	ug/Kg	08/01/14	DD	SW 8270
Fluorene	160	J	300	140	ug/Kg	08/01/14	DD	SW 8270
Hexachlorobenzene	ND		300	130	ug/Kg	08/01/14	DD	SW 8270
Hexachlorobutadiene	ND		300	160	ug/Kg	08/01/14	DD	SW 8270
Hexachlorocyclopentadiene	ND		300	130	ug/Kg	08/01/14	DD	SW 8270
Hexachloroethane	ND		300	130	ug/Kg	08/01/14	DD	SW 8270
Indeno(1,2,3-cd)pyrene	ND		300	140	ug/Kg	08/01/14	DD	SW 8270
Isophorone	ND		300	120	ug/Kg	08/01/14	DD	SW 8270
Naphthalene	ND		300	120	ug/Kg	08/01/14	DD	SW 8270
Nitrobenzene	ND		300	150	ug/Kg	08/01/14	DD	SW 8270
N-Nitrosodimethylamine	ND		300	120	ug/Kg	08/01/14	DD	SW 8270
N-Nitrosodi-n-propylamine	ND		300	140	ug/Kg	08/01/14	DD	SW 8270
N-Nitrosodiphenylamine	ND		300	170	ug/Kg	08/01/14	DD	SW 8270
Pentachloronitrobenzene	ND		300	160	ug/Kg	08/01/14	DD	SW 8270
Pentachlorophenol	ND		300	160	ug/Kg	08/01/14	DD	SW 8270
Phenanthrene	920		300	120	ug/Kg	08/01/14	DD	SW 8270
Phenol	ND		300	140	ug/Kg	08/01/14	DD	SW 8270
Pyrene	580		300	150	ug/Kg	08/01/14	DD	SW 8270
Pyridine	ND		300	110	ug/Kg	08/01/14	DD	SW 8270
QA/QC Surrogates								
% 2,4,6-Tribromophenol	74				%	08/01/14	DD	30 - 130 %
% 2-Fluorobiphenyl	63				%	08/01/14	DD	30 - 130 %
% 2-Fluorophenol	64				%	08/01/14	DD	30 - 130 %
% Nitrobenzene-d5	65				%	08/01/14	DD	30 - 130 %
% Phenol-d5	68				%	08/01/14	DD	30 - 130 %
% Terphenyl-d14	98				%	08/01/14	DD	30 - 130 %

Project ID: 526 UNION AVE., BROOKLYN
Client ID: B5 8-10

Phoenix I.D.: BG85534

Parameter	Result	RL/ PQL	LOD/ MDL	Units	Date/Time	By	Reference

1 = This parameter is not certified by NY NELAC for this matrix. NY NELAC does not offer certification for all parameters at this time.

RL/PQL=Reporting/Practical Quantitation Level (Equivalent to NELAC LOQ, Limit of Quanitation) ND=Not Detected
BRL=Below Reporting Level LOD=Limit of Detection MDL=Method Detection Limit

Comments:

Per 1.4.6 of EPA method 8270D, 1,2-Diphenylhydrazine is unstable and readily converts to Azobenzene. Azobenzene is used for the calibration of 1,2-Diphenylhydrazine.

This sample was not collected in accordance with EPA method 5035. NELAC requires the laboratory to qualify the volatile soil data as biased low.

Volatile Comment:
There was a suppression of the last internal standard in the low level analysis, all affected compounds are reported from the methanol preserved high level analysis which did not exhibit this interference.

All soils, solids and sludges are reported on a dry weight basis unless otherwise noted in the sample comments.

If there are any questions regarding this data, please call Phoenix Client Services at extension 200.
This report must not be reproduced except in full as defined by the attached chain of custody.

PLEASE NOTE: THIS PROGRESS REPORT IS CONSIDERED PRELIMINARY DATA. THE RESULTS ENTERED HAVE NOT BEEN EXAMINED BY OUR QA/QC DEPARTMENT.

Phyllis Shiller, Laboratory Director
August 04, 2014

Environmental Laboratories, Inc.
587 East Middle Turnpike, P.O.Box 370, Manchester, CT 06045
Tel. (860) 645-1102 Fax (860) 645-0823

NY # 11301

Draft Progress Report

August 04, 2014

FOR: Attn: Mr. Charles B. Sosik, P.G.
Environmental Business Consultants
1808 Middle Country Rd
Ridge NY 11961-2406

Sample Information		Custody Information		Date	Time
Matrix:	GROUND WATER	Collected by:		07/29/14	10:30
Location Code:	EBC	Received by:	LB	07/31/14	16:10
Rush Request:	72 Hour	Analyzed by:	see "By" below		
P.O.#:					

Laboratory Data

SDG ID: GBG85525
Phoenix ID: BG85535

Project ID: 526 UNION AVE., BROOKLYN
Client ID: GW1

Parameter	Result	RL/ PQL	LOD/ MDL	Units	Date/Time	By	Reference	
Volatiles								
1,1,1,2-Tetrachloroethane	ND	1.0	0.19	ug/L	07/31/14	HM	SW8260	
1,1,1-Trichloroethane	ND	5.0	0.19	ug/L	07/31/14	HM	SW8260	
1,1,2,2-Tetrachloroethane	ND	1.0	0.15	ug/L	07/31/14	HM	SW8260	
1,1,2-Trichloroethane	ND	1.0	0.20	ug/L	07/31/14	HM	SW8260	
1,1-Dichloroethane	ND	5.0	0.23	ug/L	07/31/14	HM	SW8260	
1,1-Dichloroethene	ND	1.0	0.24	ug/L	07/31/14	HM	SW8260	
1,1-Dichloropropene	ND	1.0	0.20	ug/L	07/31/14	HM	SW8260	
1,2,3-Trichlorobenzene	ND	1.0	0.20	ug/L	07/31/14	HM	SW8260	
1,2,3-Trichloropropane	ND	1.0	0.21	ug/L	07/31/14	HM	SW8260	
1,2,4-Trichlorobenzene	ND	1.0	0.18	ug/L	07/31/14	HM	SW8260	
1,2,4-Trimethylbenzene	ND	1.0	0.18	ug/L	07/31/14	HM	SW8260	
1,2-Dibromo-3-chloropropane	ND	1.0	0.36	ug/L	07/31/14	HM	SW8260	
1,2-Dibromoethane	ND	1.0	0.20	ug/L	07/31/14	HM	SW8260	
1,2-Dichlorobenzene	ND	1.0	0.16	ug/L	07/31/14	HM	SW8260	
1,2-Dichloroethane	ND	0.60	0.20	ug/L	07/31/14	HM	SW8260	
1,2-Dichloropropane	ND	1.0	0.18	ug/L	07/31/14	HM	SW8260	
1,3,5-Trimethylbenzene	ND	1.0	0.21	ug/L	07/31/14	HM	SW8260	
1,3-Dichlorobenzene	ND	5.0	0.19	ug/L	07/31/14	HM	SW8260	
1,3-Dichloropropane	ND	1.0	0.22	ug/L	07/31/14	HM	SW8260	
1,4-Dichlorobenzene	ND	5.0	0.19	ug/L	07/31/14	HM	SW8260	
2,2-Dichloropropane	ND	1.0	0.16	ug/L	07/31/14	HM	SW8260	
2-Chlorotoluene	ND	1.0	0.23	ug/L	07/31/14	HM	SW8260	
2-Hexanone	ND	1.0	0.27	ug/L	07/31/14	HM	SW8260	
2-Isopropyltoluene	ND	1.0	0.21	ug/L	07/31/14	HM	SW8260	1
4-Chlorotoluene	ND	1.0	0.16	ug/L	07/31/14	HM	SW8260	
4-Methyl-2-pentanone	ND	1.0	0.19	ug/L	07/31/14	HM	SW8260	

Project ID: 526 UNION AVE., BROOKLYN
Client ID: GW1

Phoenix I.D.: BG85535

Parameter	Result		RL/ PQL	LOD/ MDL	Units	Date/Time	By	Reference	
Acetone	9.9	S	5.0	0.31	ug/L	07/31/14	HM	SW8260	
Acrolein	ND		5.0	0.95	ug/L	07/31/14	HM	SW8260	
Acrylonitrile	ND		5.0	0.17	ug/L	07/31/14	HM	SW8260	
Benzene	0.21	J	0.70	0.19	ug/L	07/31/14	HM	SW8260	
Bromobenzene	ND		1.0	0.20	ug/L	07/31/14	HM	SW8260	
Bromochloromethane	ND		1.0	0.22	ug/L	07/31/14	HM	SW8260	
Bromodichloromethane	ND		1.0	0.16	ug/L	07/31/14	HM	SW8260	
Bromoform	ND		5.0	0.10	ug/L	07/31/14	HM	SW8260	
Bromomethane	ND		5.0	0.50	ug/L	07/31/14	HM	SW8260	
Carbon Disulfide	ND		1.0	0.24	ug/L	07/31/14	HM	SW8260	
Carbon tetrachloride	ND		1.0	0.23	ug/L	07/31/14	HM	SW8260	
Chlorobenzene	ND		5.0	0.20	ug/L	07/31/14	HM	SW8260	
Chloroethane	ND		5.0	0.24	ug/L	07/31/14	HM	SW8260	
Chloroform	2.4	J	5.0	0.22	ug/L	07/31/14	HM	SW8260	
Chloromethane	ND		5.0	0.21	ug/L	07/31/14	HM	SW8260	
cis-1,2-Dichloroethene	ND		1.0	0.23	ug/L	07/31/14	HM	SW8260	
cis-1,3-Dichloropropene	ND		0.40	0.15	ug/L	07/31/14	HM	SW8260	
Dibromochloromethane	ND		1.0	0.15	ug/L	07/31/14	HM	SW8260	
Dibromomethane	ND		1.0	0.23	ug/L	07/31/14	HM	SW8260	
Dichlorodifluoromethane	ND		1.0	0.26	ug/L	07/31/14	HM	SW8260	
Ethylbenzene	ND		1.0	0.19	ug/L	07/31/14	HM	SW8260	
Hexachlorobutadiene	ND		1.0	0.13	ug/L	07/31/14	HM	SW8260	
Isopropylbenzene	ND		1.0	0.22	ug/L	07/31/14	HM	SW8260	
m&p-Xylene	ND		1.0	0.42	ug/L	07/31/14	HM	SW8260	
Methyl ethyl ketone	1.5		1.0	0.50	ug/L	07/31/14	HM	SW8260	
Methyl t-butyl ether (MTBE)	2.6		1.0	0.19	ug/L	07/31/14	HM	SW8260	
Methylene chloride	ND		3.0	0.16	ug/L	07/31/14	HM	SW8260	
Naphthalene	ND		1.0	0.19	ug/L	07/31/14	HM	SW8260	
n-Butylbenzene	ND		1.0	0.22	ug/L	07/31/14	HM	SW8260	
n-Propylbenzene	ND		1.0	0.20	ug/L	07/31/14	HM	SW8260	
o-Xylene	ND		1.0	0.45	ug/L	07/31/14	HM	SW8260	
p-Isopropyltoluene	ND		1.0	0.21	ug/L	07/31/14	HM	SW8260	
sec-Butylbenzene	ND		1.0	0.22	ug/L	07/31/14	HM	SW8260	
Styrene	ND		1.0	0.41	ug/L	07/31/14	HM	SW8260	
tert-Butylbenzene	ND		1.0	0.23	ug/L	07/31/14	HM	SW8260	
Tetrachloroethene	ND		1.0	0.24	ug/L	07/31/14	HM	SW8260	
Tetrahydrofuran (THF)	ND		5.0	0.51	ug/L	07/31/14	HM	SW8260	1
Toluene	ND		1.0	0.20	ug/L	07/31/14	HM	SW8260	
trans-1,2-Dichloroethene	ND		5.0	0.20	ug/L	07/31/14	HM	SW8260	
trans-1,3-Dichloropropene	ND		0.40	0.14	ug/L	07/31/14	HM	SW8260	
trans-1,4-dichloro-2-butene	ND		1.0	0.45	ug/L	07/31/14	HM	SW8260	
Trichloroethene	ND		1.0	0.18	ug/L	07/31/14	HM	SW8260	
Trichlorofluoromethane	ND		1.0	0.23	ug/L	07/31/14	HM	SW8260	
Trichlorotrifluoroethane	ND		1.0	0.23	ug/L	07/31/14	HM	SW8260	
Vinyl chloride	ND		1.0	0.14	ug/L	07/31/14	HM	SW8260	
QA/QC Surrogates									
% 1,2-dichlorobenzene-d4	98				%	07/31/14	HM	70 - 130 %	
% Bromofluorobenzene	93				%	07/31/14	HM	70 - 130 %	
% Dibromofluoromethane	103				%	07/31/14	HM	70 - 130 %	

Project ID: 526 UNION AVE., BROOKLYN
Client ID: GW1

Phoenix I.D.: BG85535

Parameter	Result	RL/ PQL	LOD/ MDL	Units	Date/Time	By	Reference
% Toluene-d8	100			%	07/31/14	HM	70 - 130 %

1 = This parameter is not certified by NY NELAC for this matrix. NY NELAC does not offer certification for all parameters at this time.

RL/PQL=Reporting/Practical Quantitation Level (Equivalent to NELAC LOQ, Limit of Quanitation) ND=Not Detected
BRL=Below Reporting Level LOD=Limit of Detection MDL=Method Detection Limit

Comments:

If there are any questions regarding this data, please call Phoenix Client Services at extension 200.
This report must not be reproduced except in full as defined by the attached chain of custody.

PLEASE NOTE: THIS PROGRESS REPORT IS CONSIDERED PRELIMINARY DATA. THE RESULTS ENTERED HAVE NOT BEEN EXAMINED BY OUR QA/QC DEPARTMENT.

Phyllis Shiller, Laboratory Director
August 04, 2014

PHOENIX

Environmental Laboratories, Inc.
587 East Middle Turnpike, P.O.Box 370, Manchester, CT 06045
Tel. (860) 645-1102 Fax (860) 645-0823

ACCREDITED IN ACCORDANCE WITH nelac NY # 11301

Draft Progress Report

August 04, 2014

FOR: Attn: Mr. Charles B. Sosik, P.G.
Environmental Business Consultants
1808 Middle Country Rd
Ridge NY 11961-2406

Sample Information		Custody Information		Date	Time
Matrix:	GROUND WATER	Collected by:		07/29/14	10:40
Location Code:	EBC	Received by:	LB	07/31/14	16:10
Rush Request:	72 Hour	Analyzed by:	see "By" below		
P.O.#:					

Laboratory Data

SDG ID: GBG85525
Phoenix ID: BG85536

Project ID: 526 UNION AVE., BROOKLYN
Client ID: GW2

Parameter	Result	RL/ PQL	LOD/ MDL	Units	Date/Time	By	Reference
Volatiles							
Volatiles	Pending			ug/L			SW8260

RL/PQL=Reporting/Practical Quantitation Level (Equivalent to NELAC LOQ, Limit of Quanitation) ND=Not Detected
BRL=Below Reporting Level LOD=Limit of Detection MDL=Method Detection Limit

Comments:

If there are any questions regarding this data, please call Phoenix Client Services at extension 200.
This report must not be reproduced except in full as defined by the attached chain of custody.

PLEASE NOTE: THIS PROGRESS REPORT IS CONSIDERED PRELIMINARY DATA. THE RESULTS ENTERED HAVE NOT BEEN EXAMINED BY OUR QA/QC DEPARTMENT.

Phyllis Shiller, Laboratory Director
August 04, 2014

PHOENIX

Environmental Laboratories, Inc.
587 East Middle Turnpike, P.O.Box 370, Manchester, CT 06045
Tel. (860) 645-1102 Fax (860) 645-0823

ACCREDITED IN ACCORDANCE WITH nelac NY # 11301

Draft Progress Report

August 04, 2014

FOR: Attn: Mr. Charles B. Sosik, P.G.
Environmental Business Consultants
1808 Middle Country Rd
Ridge NY 11961-2406

Sample Information		Custody Information		Date	Time
Matrix:	GROUND WATER	Collected by:		07/29/14	10:50
Location Code:	EBC	Received by:	LB	07/31/14	16:10
Rush Request:	72 Hour	Analyzed by:	see "By" below		
P.O.#:					

Laboratory Data

SDG ID: GBG85525
Phoenix ID: BG85537

Project ID: 526 UNION AVE., BROOKLYN
Client ID: GW3

Parameter	Result	RL/ PQL	LOD/ MDL	Units	Date/Time	By	Reference	
Volatiles								
1,1,1,2-Tetrachloroethane	ND	1.0	0.19	ug/L	08/01/14	HM	SW8260	
1,1,1-Trichloroethane	ND	5.0	0.19	ug/L	08/01/14	HM	SW8260	
1,1,2,2-Tetrachloroethane	ND	1.0	0.15	ug/L	08/01/14	HM	SW8260	
1,1,2-Trichloroethane	ND	1.0	0.20	ug/L	08/01/14	HM	SW8260	
1,1-Dichloroethane	ND	5.0	0.23	ug/L	08/01/14	HM	SW8260	
1,1-Dichloroethene	ND	1.0	0.24	ug/L	08/01/14	HM	SW8260	
1,1-Dichloropropene	ND	1.0	0.20	ug/L	08/01/14	HM	SW8260	
1,2,3-Trichlorobenzene	ND	1.0	0.20	ug/L	08/01/14	HM	SW8260	
1,2,3-Trichloropropane	ND	1.0	0.21	ug/L	08/01/14	HM	SW8260	
1,2,4-Trichlorobenzene	ND	1.0	0.18	ug/L	08/01/14	HM	SW8260	
1,2,4-Trimethylbenzene	ND	1.0	0.18	ug/L	08/01/14	HM	SW8260	
1,2-Dibromo-3-chloropropane	ND	1.0	0.36	ug/L	08/01/14	HM	SW8260	
1,2-Dibromoethane	ND	1.0	0.20	ug/L	08/01/14	HM	SW8260	
1,2-Dichlorobenzene	ND	1.0	0.16	ug/L	08/01/14	HM	SW8260	
1,2-Dichloroethane	ND	0.60	0.20	ug/L	08/01/14	HM	SW8260	
1,2-Dichloropropane	ND	1.0	0.18	ug/L	08/01/14	HM	SW8260	
1,3,5-Trimethylbenzene	ND	1.0	0.21	ug/L	08/01/14	HM	SW8260	
1,3-Dichlorobenzene	ND	5.0	0.19	ug/L	08/01/14	HM	SW8260	
1,3-Dichloropropane	ND	1.0	0.22	ug/L	08/01/14	HM	SW8260	
1,4-Dichlorobenzene	ND	5.0	0.19	ug/L	08/01/14	HM	SW8260	
2,2-Dichloropropane	ND	1.0	0.16	ug/L	08/01/14	HM	SW8260	
2-Chlorotoluene	ND	1.0	0.23	ug/L	08/01/14	HM	SW8260	
2-Hexanone	ND	1.0	0.27	ug/L	08/01/14	HM	SW8260	
2-Isopropyltoluene	ND	1.0	0.21	ug/L	08/01/14	HM	SW8260	1
4-Chlorotoluene	ND	1.0	0.16	ug/L	08/01/14	HM	SW8260	
4-Methyl-2-pentanone	ND	1.0	0.19	ug/L	08/01/14	HM	SW8260	

Project ID: 526 UNION AVE., BROOKLYN
Client ID: GW3

Phoenix I.D.: BG85537

Parameter	Result		RL/ PQL	LOD/ MDL	Units	Date/Time	By	Reference	
Acetone	9.0	S	5.0	0.31	ug/L	08/01/14	HM	SW8260	
Acrolein	ND		5.0	0.95	ug/L	08/01/14	HM	SW8260	
Acrylonitrile	ND		5.0	0.17	ug/L	08/01/14	HM	SW8260	
Benzene	ND		0.70	0.19	ug/L	08/01/14	HM	SW8260	
Bromobenzene	ND		1.0	0.20	ug/L	08/01/14	HM	SW8260	
Bromochloromethane	ND		1.0	0.22	ug/L	08/01/14	HM	SW8260	
Bromodichloromethane	ND		1.0	0.16	ug/L	08/01/14	HM	SW8260	
Bromoform	ND		5.0	0.10	ug/L	08/01/14	HM	SW8260	
Bromomethane	ND		5.0	0.50	ug/L	08/01/14	HM	SW8260	
Carbon Disulfide	0.38	J	1.0	0.24	ug/L	08/01/14	HM	SW8260	
Carbon tetrachloride	ND		1.0	0.23	ug/L	08/01/14	HM	SW8260	
Chlorobenzene	ND		5.0	0.20	ug/L	08/01/14	HM	SW8260	
Chloroethane	ND		5.0	0.24	ug/L	08/01/14	HM	SW8260	
Chloroform	ND		5.0	0.22	ug/L	08/01/14	HM	SW8260	
Chloromethane	ND		5.0	0.21	ug/L	08/01/14	HM	SW8260	
cis-1,2-Dichloroethene	ND		1.0	0.23	ug/L	08/01/14	HM	SW8260	
cis-1,3-Dichloropropene	ND		0.40	0.15	ug/L	08/01/14	HM	SW8260	
Dibromochloromethane	ND		1.0	0.15	ug/L	08/01/14	HM	SW8260	
Dibromomethane	ND		1.0	0.23	ug/L	08/01/14	HM	SW8260	
Dichlorodifluoromethane	ND		1.0	0.26	ug/L	08/01/14	HM	SW8260	
Ethylbenzene	ND		1.0	0.19	ug/L	08/01/14	HM	SW8260	
Hexachlorobutadiene	ND		1.0	0.13	ug/L	08/01/14	HM	SW8260	
Isopropylbenzene	ND		1.0	0.22	ug/L	08/01/14	HM	SW8260	
m&p-Xylene	ND		1.0	0.42	ug/L	08/01/14	HM	SW8260	
Methyl ethyl ketone	0.65	J	1.0	0.50	ug/L	08/01/14	HM	SW8260	
Methyl t-butyl ether (MTBE)	0.28	J	1.0	0.19	ug/L	08/01/14	HM	SW8260	
Methylene chloride	ND		3.0	0.16	ug/L	08/01/14	HM	SW8260	
Naphthalene	2.6		1.0	0.19	ug/L	08/01/14	HM	SW8260	
n-Butylbenzene	ND		1.0	0.22	ug/L	08/01/14	HM	SW8260	
n-Propylbenzene	ND		1.0	0.20	ug/L	08/01/14	HM	SW8260	
o-Xylene	ND		1.0	0.45	ug/L	08/01/14	HM	SW8260	
p-Isopropyltoluene	ND		1.0	0.21	ug/L	08/01/14	HM	SW8260	
sec-Butylbenzene	ND		1.0	0.22	ug/L	08/01/14	HM	SW8260	
Styrene	ND		1.0	0.41	ug/L	08/01/14	HM	SW8260	
tert-Butylbenzene	ND		1.0	0.23	ug/L	08/01/14	HM	SW8260	
Tetrachloroethene	ND		1.0	0.24	ug/L	08/01/14	HM	SW8260	
Tetrahydrofuran (THF)	ND		5.0	0.51	ug/L	08/01/14	HM	SW8260	1
Toluene	ND		1.0	0.20	ug/L	08/01/14	HM	SW8260	
trans-1,2-Dichloroethene	ND		5.0	0.20	ug/L	08/01/14	HM	SW8260	
trans-1,3-Dichloropropene	ND		0.40	0.14	ug/L	08/01/14	HM	SW8260	
trans-1,4-dichloro-2-butene	ND		1.0	0.45	ug/L	08/01/14	HM	SW8260	
Trichloroethene	ND		1.0	0.18	ug/L	08/01/14	HM	SW8260	
Trichlorofluoromethane	ND		1.0	0.23	ug/L	08/01/14	HM	SW8260	
Trichlorotrifluoroethane	ND		1.0	0.23	ug/L	08/01/14	HM	SW8260	
Vinyl chloride	ND		1.0	0.14	ug/L	08/01/14	HM	SW8260	
QA/QC Surrogates									
% 1,2-dichlorobenzene-d4	104				%	08/01/14	HM	70 - 130 %	
% Bromofluorobenzene	96				%	08/01/14	HM	70 - 130 %	
% Dibromofluoromethane	98				%	08/01/14	HM	70 - 130 %	

Project ID: 526 UNION AVE., BROOKLYN
Client ID: GW3

Phoenix I.D.: BG85537

Parameter	Result	RL/ PQL	LOD/ MDL	Units	Date/Time	By	Reference
% Toluene-d8	100			%	08/01/14	HM	70 - 130 %

1 = This parameter is not certified by NY NELAC for this matrix. NY NELAC does not offer certification for all parameters at this time.

RL/PQL=Reporting/Practical Quantitation Level (Equivalent to NELAC LOQ, Limit of Quanitation) ND=Not Detected
BRL=Below Reporting Level LOD=Limit of Detection MDL=Method Detection Limit

Comments:

If there are any questions regarding this data, please call Phoenix Client Services at extension 200.
This report must not be reproduced except in full as defined by the attached chain of custody.

PLEASE NOTE: THIS PROGRESS REPORT IS CONSIDERED PRELIMINARY DATA. THE RESULTS ENTERED HAVE NOT BEEN EXAMINED BY OUR QA/QC DEPARTMENT.

Phyllis Shiller, Laboratory Director
August 04, 2014

Sample Criteria Exceedences Report

GBG85525 - EBC

Criteria: NY: 375, 375RRS, 375RS, GW

State: NY

SampNo	Acode	Phoenix Analyte	Criteria	Result	RL	Criteria	RL Criteria	Analysis Units
BG85525	HG-SM	Mercury	NY / 375-6.8 Metals / Unrestricted Use Soil	0.27	0.07	0.18	0.18	mg/Kg
BG85525	PB-SMDP	Lead	NY / 375-6.8 Metals / Unrestricted Use Soil	108	0.7	63	63	mg/Kg
BG85526	$8260-SMDPR	Acetone	NY / 375-6.8 Volatiles / Unrestricted Use Soil	120	66	50	50	ug/Kg
BG85527	HG-SM	Mercury	NY / 375-6.8 Metals / Unrestricted Use Soil	0.53	0.06	0.18	0.18	mg/Kg
BG85527	PB-SMDP	Lead	NY / 375-6.8 Metals / Unrestricted Use Soil	166	6.6	63	63	mg/Kg
BG85527	ZN-SMDP	Zinc	NY / 375-6.8 Metals / Unrestricted Use Soil	417	6.6	109	109	mg/Kg
BG85528	$8260-SMDPR	Acetone	NY / 375-6.8 Volatiles / Unrestricted Use Soil	190	62	50	50	ug/Kg
BG85529	CR-SM	Chromium	NY / 375-6.8 Metals / Unrestricted Use Soil	33.1	0.38	30		mg/Kg
BG85529	HG-SM	Mercury	NY / 375-6.8 Metals / Residential	30.9	3.3	0.81	0.81	mg/Kg
BG85529	HG-SM	Mercury	NY / 375-6.8 Metals / Residential Restricted	30.9	3.3	0.81	0.81	mg/Kg
BG85529	HG-SM	Mercury	NY / 375-6.8 Metals / Unrestricted Use Soil	30.9	3.3	0.18	0.18	mg/Kg
BG85529	PB-SMDP	Lead	NY / 375-6.8 Metals / Unrestricted Use Soil	85.7	0.8	63	63	mg/Kg
BG85529	ZN-SMDP	Zinc	NY / 375-6.8 Metals / Unrestricted Use Soil	124	0.8	109	109	mg/Kg
BG85530	$8260-SMDPR	Acetone	NY / 375-6.8 Volatiles / Unrestricted Use Soil	110	65	50	50	ug/Kg
BG85531	CD-SM	Cadmium	NY / 375-6.8 Metals / Residential	5.42	0.35	2.5	2.5	mg/Kg
BG85531	CD-SM	Cadmium	NY / 375-6.8 Metals / Residential Restricted	5.42	0.35	4.3	4.3	mg/Kg
BG85531	CD-SM	Cadmium	NY / 375-6.8 Metals / Unrestricted Use Soil	5.42	0.35	2.5	2.5	mg/Kg
BG85531	HG-SM	Mercury	NY / 375-6.8 Metals / Unrestricted Use Soil	0.64	0.08	0.18	0.18	mg/Kg
BG85531	PB-SMDP	Lead	NY / 375-6.8 Metals / Unrestricted Use Soil	241	6.9	63	63	mg/Kg
BG85531	ZN-SMDP	Zinc	NY / 375-6.8 Metals / Unrestricted Use Soil	192	6.9	109	109	mg/Kg
BG85533	AG-SM	Silver	NY / 375-6.8 Metals / Unrestricted Use Soil	7.29	0.38	2	2	mg/Kg
BG85533	AS-SM	Arsenic	NY / 375-6.8 Metals / Residential	108	0.8	16	16	mg/Kg
BG85533	AS-SM	Arsenic	NY / 375-6.8 Metals / Residential Restricted	108	0.8	16	16	mg/Kg
BG85533	AS-SM	Arsenic	NY / 375-6.8 Metals / Unrestricted Use Soil	108	0.8	13	13	mg/Kg
BG85533	BA-SMDP	Barium	NY / 375-6.8 Metals / Residential	2730	7.6	350	350	mg/Kg
BG85533	BA-SMDP	Barium	NY / 375-6.8 Metals / Residential Restricted	2730	7.6	400	400	mg/Kg
BG85533	BA-SMDP	Barium	NY / 375-6.8 Metals / Unrestricted Use Soil	2730	7.6	350	350	mg/Kg
BG85533	CD-SM	Cadmium	NY / 375-6.8 Metals / Residential	42.7	0.38	2.5	2.5	mg/Kg
BG85533	CD-SM	Cadmium	NY / 375-6.8 Metals / Residential Restricted	42.7	0.38	4.3	4.3	mg/Kg
BG85533	CD-SM	Cadmium	NY / 375-6.8 Metals / Unrestricted Use Soil	42.7	0.38	2.5	2.5	mg/Kg
BG85533	CR-SM	Chromium	NY / 375-6.8 Metals / Unrestricted Use Soil	195	3.8	30		mg/Kg
BG85533	HG-SM	Mercury	NY / 375-6.8 Metals / Residential	16.9	3.9	0.81	0.81	mg/Kg
BG85533	HG-SM	Mercury	NY / 375-6.8 Metals / Residential Restricted	16.9	3.9	0.81	0.81	mg/Kg
BG85533	HG-SM	Mercury	NY / 375-6.8 Metals / Unrestricted Use Soil	16.9	3.9	0.18	0.18	mg/Kg
BG85533	NI-SM	Nickel	NY / 375-6.8 Metals / Residential	323	3.8	140	140	mg/Kg
BG85533	NI-SM	Nickel	NY / 375-6.8 Metals / Residential Restricted	323	3.8	310	310	mg/Kg

Sample Criteria Exceedences Report

GBG85525 - EBC

Criteria: NY: 375, 375RRS, 375RS, GW

State: NY

SampNo	Acode	Phoenix Analyte	Criteria	Result	RL	Criteria	RL Criteria	Analysis Units
BG85533	NI-SM	Nickel	NY / 375-6.8 Metals / Unrestricted Use Soil	323	3.8	30	30	mg/Kg
BG85534	$8260-SMDPR	Acetone	NY / 375-6.8 Volatiles / Unrestricted Use Soil	64	67	50	50	ug/Kg
BG85535	$8260DP25R	1,2,3-Trichloropropane	NY / TOGS - Water Quality / GA Criteria	ND	1.0	0.04	0.04	ug/L
BG85535	$8260DP25R	1,2-Dibromo-3-chloropropane	NY / TOGS - Water Quality / GA Criteria	ND	1.0	0.04	0.04	ug/L
BG85535	$8260DP25R	1,2-Dibromoethane	NY / TOGS - Water Quality / GA Criteria	ND	1.0	0.0006	0.0006	ug/L
BG85535	$8260DP25R	1,3-Dichlorobenzene	NY / TOGS - Water Quality / GA Criteria	ND	5.0	3	3	ug/L
BG85535	$8260DP25R	Hexachlorobutadiene	NY / TOGS - Water Quality / GA Criteria	ND	1.0	0.5	0.5	ug/L
BG85537	$8260DP25R	Hexachlorobutadiene	NY / TOGS - Water Quality / GA Criteria	ND	1.0	0.5	0.5	ug/L
BG85537	$8260DP25R	1,2,3-Trichloropropane	NY / TOGS - Water Quality / GA Criteria	ND	1.0	0.04	0.04	ug/L
BG85537	$8260DP25R	1,2-Dibromo-3-chloropropane	NY / TOGS - Water Quality / GA Criteria	ND	1.0	0.04	0.04	ug/L
BG85537	$8260DP25R	1,2-Dibromoethane	NY / TOGS - Water Quality / GA Criteria	ND	1.0	0.0006	0.0006	ug/L
BG85537	$8260DP25R	1,3-Dichlorobenzene	NY / TOGS - Water Quality / GA Criteria	ND	5.0	3	3	ug/L

Phoenix Laboratories does not assume responsibility for the data contained in this report. It is provided as an additional tool to identify requested criteria exceedences. All efforts are made to ensure the accuracy of the data (obtained from appropriate agencies). A lack of exceedence information does not necessarily suggest conformance to the criteria. It is ultimately the site professional's responsibility to determine appropriate compliance.

Cooler: Yes ☐ No ☐
Coolant: WPK ☑ ICE ☐ No ☐
Temp °C Pg 1 of 2

PHOENIX Environmental Laboratories, Inc.

NY/NJ CHAIN OF CUSTODY RECORD

587 East Middle Turnpike, P.O. Box 370, Manchester, CT 06040
Email: info@phoenixlabs.com Fax (860) 645-0823
Client Services (860) 645-8726

Contact Options:
☐ Fax:
☐ Phone:
☑ Email: Kile

Customer: EBC
Address: Ridge NJ

Project: 526 Union Ave Brooklyn NY
Report to:
Invoice to:

Project P.O:

This section MUST be completed with Bottle Quantities.

Sampler's Signature: [signature] Date: 7-29-14

Client Sample Information - Identification

Matrix Code:
DW=Drinking Water **GW**=Ground Water **SW**=Surface Water **WW**=Waste Water
RW=Raw Water **SE**=Sediment **SL**=Sludge **S**=Soil **SD**=Solid **W**=Wipe
OIL=Oil **B**=Bulk **L**=Liquid

Analysis Request

PHOENIX USE ONLY SAMPLE #	Customer Sample Identification	Sample Matrix	Date Sampled	Time Sampled	VOC 8260	SVOC 8270	TAL Metals	TCLP Metals	4 oz Soil	Soil VOA Vials [ ] methanol [ ] H2O	GL Soil container (2) oz	GL Soil container (1) oz	40 ml VOA Vial [ ] As is [ ] HCl	GL Amber 1000ml [ ] As is [ ] H2SO4	PL As is [ ] 250ml [ ] 500ml [ ] 1000ml	PL H2SO4 [ ] 250ml [ ] 500ml	PL HNO3 250ml	PL NaOH 250ml	Bacteria Bottle
85525	B1 0-2	S	7-29	720			X	X				1							
85526	B1 8-10			740	X	X					1	1							
85527	B2 3-5			800			X	X				1							
85528	B2 8-10			820	X	X					1	1							
85529	B3 0-2			840			X	X	2										
85530	B3 8-10			900	X	X			2		1								
85531	B4 2-4			920			X	X				1							
85532	B4 8-10			940	X	X					1	1							
85533	B5 0-2			1000			X	X				1							
85534	B5 8-10			1020	X	X					1	1							
85535	GW1	GW		1030	X								3						

Relinquished by:	Accepted by:	Date:	Time:
[signature]	[signature]	7-31-14	11:15
[signature]	[signature]	7-31-14	1610

Comments, Special Requirements or Regulations:

Turnaround:
☐ 1 Day*
☐ 2 Days*
☐ 3 Days*
☑ 5 Days
☐ 10 Days
☐ Other
* SURCHARGE APPLIES

NJ
☐ Res. Criteria
☐ Non-Res. Criteria
☐ Impact to GW Soil Cleanup Criteria
☐ GW Criteria

NY
☑ TAGM 4046 GW
☐ TAGM 4046 SOIL
☑ NY375 Unrestricted Use Soil
☑ NY375 Residential Soil
☑ Restricted/Residential
☐ Commercial
☐ Industrial

Data Format
☐ Phoenix Std Report
☑ Excel
☑ PDF
☐ GIS/Key
☐ EQuIS
☐ NJ Hazsite EDD
☐ NY EZ EDD (ASP)
☐ Other

Data Package
☐ NJ Reduced Deliv. *
☐ NY Enhanced (ASP B) *
☐ Other

State where samples were collected: NY

Cooler: Yes [ ] No [ ]
Coolant: IPK [ ] ICE [ ] No [ ]
Temp 0 °C Pg 2 of 2

PHOENIX
Environmental Laboratories, Inc.

NY/NJ CHAIN OF CUSTODY RECORD

587 East Middle Turnpike, P.O. Box 370, Manchester, CT 06040
Email: info@phoenixlabs.com Fax (860) 645-0823
Client Services (860) 645-8726

Contact Options:
[ ] Fax:
[ ] Phone:
[x] Email: file

Customer: EBC
Address: Ridge NJ

Project: 526 Union Ave Bklyn NY
Report to:
Invoice to:

Project P.O:

This section MUST be completed with Bottle Quantities.

Client Sample - Information - Identification

Sampler's Signature: [signature] Date: 7.29.14

Matrix Code:
DW=Drinking Water **GW**=Ground Water **SW**=Surface Water **WW**=Waste Water
RW=Raw Water **SE**=Sediment **SL**=Sludge **S**=Soil **SD**=Solid **W**=Wipe
OIL=Oil **B**=Bulk **L**=Liquid

Analysis Request

PHOENIX USE ONLY SAMPLE #	Customer Sample Identification	Sample Matrix	Date Sampled	Time Sampled	VOC 8260	Soil VOA Vials [ ] methanol [ ] H2O	GL Soil container ( ) oz	GL Soil container ( ) oz	40 ml VOA Vial [x] As is [ ] HCl	GL Amber 1000ml [ ] As is [ ] H2SO4	PL As is [ ] 250ml [ ] 500ml [ ] 1000ml	PL H2SO4 [ ] 250ml [ ] 500ml	PL HNO3 250ml	PL NaOH 250ml	Bacteria Bottle
85536	gw 2	gw	7.29	1040	x				3						
85537	gw 3	gw	↓	1050	x				3						

Relinquished by:	Accepted by:	Date:	Time:
[signature]	[signature]	7-31-14	11:15
	[signature]	7-31-14	1610

Comments, Special Requirements or Regulations:

Turnaround:
[ ] 1 Day*
[ ] 2 Days*
[ ] 3 Days*
[x] 5 Days
[ ] 10 Days
[ ] Other
* SURCHARGE APPLIES

NJ
[ ] Res. Criteria
[ ] Non-Res. Criteria
[ ] Impact to GW Soil Cleanup Criteria
[ ] GW Criteria

NY
[x] TAGM 4046 GW
[ ] TAGM 4046 SOIL
[ ] NY375 Unrestricted Use Soil
[ ] NY375 Residential Soil
[ ] Restricted/Residential
[ ] Commercial
[ ] Industrial

Data Format
[ ] Phoenix Std Report
[x] Excel
[x] PDF
[ ] GIS/Key
[ ] EQuIS
[ ] NJ Hazsite EDD
[ ] NY EZ EDD (ASP)
[ ] Other

Data Package
[ ] NJ Reduced Deliv. *
[ ] NY Enhanced (ASP B) *
[ ] Other

State where samples were collected: NJ